CONTRACT DOCUMENTS
FOR:

CITY OF FERNDALE, WASHINGTON
MAIN STREET IMPROVEMENTS (DOUGLAS TO CHURCH)
ST2012--01

Consisting of:

Bid Documents
Contract Forms
Specifications & Conditions
Drawings

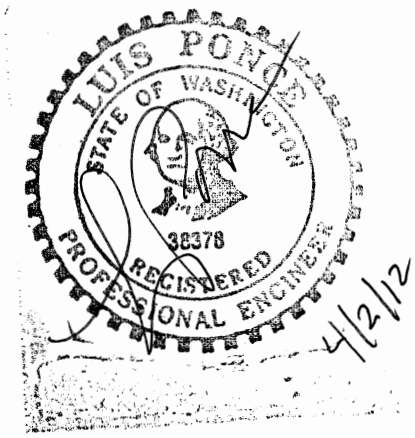

Plans Provided for:

City of Ferndale
Janice Marlega, P.E., Public Works Director
2095 Main Street
Ferndale, WA 98248
Phone: (360) 384-4006

Engineer:

Reichhardt & Ebe Engineering, Inc.
423 Front Street
Lynden, WA 98264
Phone: (360) 354-3687
Fax: (360) 354-0407

MAIN STREET IMPROVEMENTS (DOUGLAS TO CHURCH)
FERNDALE, WASHINGTON

TABLE OF CONTENTS

BID PROCEDURES AND CONDITIONS **3**

INVITATION FOR BID 4
BID PROPOSAL 6
NON-COLLUSION DECLARATION 24
BIDDER IDENTIFICATION 25
BID PROPOSAL SIGNATURE AND ADDENDUM ACKNOWLEDGMENT 26
BID BOND 27
LOCAL AGENCY SUBCONTRACTOR LIST 28

SPECIFICATIONS AND CONDITIONS **29**

SPECIAL PROVISIONS TO THE STANDARD SPECIFICATIONS 57
DIVISION 1 59
DIVISION 2 98
DIVISION 4 108
DIVISION 5 110
DIVISION 6 119
DIVISION 7 126
DIVISION 8 142
DIVISION 9 168

CONTRACT FORMS **179**

CONTRACT 180
PERFORMANCE BOND 184
PAYMENT BOND 185
RETAINAGE INVESTMENT OPTION 187
CONTRACT BOND 189

APPENDICES **191**

APPENDIX A – STATE PREVAILING WAGE RATES
APPENDIX B – GEOTECHNICAL DATA REPORT
APPENDIX C – TRAFFIC CONTROL PLAN – SERIES K WSDOT STANDARD PLANS
APPENDIX D – CITY OF FERNDALE STANDARD PLANS
APPENDIX E – WSDOT STANDARD PLANS
APPENDIX F – AGC AGREEMENT
APPENDIX G – NPDES PERMIT
APPENDIX H – HPA

BID PROCEDURES AND CONDITIONS

(This Page Intentionally Left Blank)

INVITATION FOR BID

CITY OF FERNDALE

MAIN STREET IMPROVEMENTS (DOUGLAS TO CHURCH)

ST 2012-01

Sealed bid proposals will be received by the City of Ferndale at Ferndale City Hall, 2095 Main Street, Ferndale, Washington, 98248, (360) 384-4006, until 10:00 AM on April 24, 2012, and will then and there be opened and publicly read for improvements of approximately 3,200 lineal feet of Main Street, from Douglas Road to Church Road. Work will include installation of 900 linear feet of sanitary sewer line; 5,000 linear feet of storm drain line; stormwater pond; and 800 linear feet of water main; installation of a 3 sided culvert; structural earth wall; removal of existing pavement, curbs and sidewalks; grading; placing gravel base and crushed surfacing; hot mix asphalt paving; installing curbs, gutters, and sidewalks; landscaping; and other work in accordance with the Contract Plans, Special Provisions, the Standard Specifications, including the amendments thereto, and Standard Plans.

All bid proposals shall be accompanied by a bid proposal deposit in cash, certified check, cashier's check, or surety bond in an amount equal to five percent (5%) of the amount of such bid proposal. Should the successful bidder fail to enter into such contract and furnish satisfactory performance bond and payment bond both in an amount of 100 percent (100%) of the contract price within the time stated in the specifications, the bid proposal deposit shall be forfeited to the City of Ferndale. All bidders and subcontractors shall have a contractor's license to work in the State of Washington and a City of Ferndale Business License.

Project Documents:
Maps, plans, and specifications may be obtained from the Ferndale City Hall upon payment in the amount of $60.00 for specifications and plan sets. Informational copies of maps, plans and specifications are on file for inspection in the Ferndale City Hall, 2095 Main Street, Ferndale, Washington 98248.

Bidders, prior to submittal of a bid, may attend a pre-bid conference with the Project Engineer. The meeting will start at 10:00 AM April 16, 2012, at the Ferndale City Hall, 2095 Main Street, Ferndale, Washington 98248. A jobsite visit may follow upon request.

The City of Ferndale is an Equal Opportunity and Affirmative Action Employer. Minority and Women-Owned firms are encouraged to submit bids

Sam Taylor
City Clerk - City of Ferndale
Ferndale Record Journal - Published Wednesday, April 4, 2012 and April 11, 2012
Bellingham Herald – Published Monday April 2, 2012

BID PROPOSAL FORMS
(This Page Intentionally Left Blank)

BID PROPOSAL

FOR

MAIN STREET IMPROVEMENTS (DOUGLAS TO CHURCH)
FERNDALE, WASHINGTON

Date: _____

TO: City of Ferndale

Gentlepersons:

This certifies that the Undersigned: has examined the location of the project site and the conditions of work; and has carefully read and thoroughly understands the contract documents entitled: "**MAIN STREET IMPROVEMENTS (DOUGLAS TO CHURCH)**", in Ferndale, including the "Bid Procedures and Conditions", "Specifications and Conditions", "Contract Forms", and "Plans" governing the work embraced in this project and the method by which payment will be made for said work. The Undersigned hereby proposes to undertake and complete the work embraced in this project in accordance with said contract documents, and agrees to accept as payment for said work, the schedule of lump sum and unit prices as set forth in the "Bid" below.

The Undersigned acknowledges that payment will be based on the actual work performed and material used as measured or provided for in accordance with the said contract documents, and that no additional compensation will be allowed for any taxes not included in each lump sum or unit price, and that the basis for payment will be the actual work performed and measured or provided for in accordance with the said contract documents.

BID PROPOSAL FORM
City of Ferndale
Main Street Improvements (Douglas to Church)

ITEM NO.	APPROX. QUANTITY	ITEM	UNIT PRICE	TOTAL
		Schedule A - Civil Items		
1	1 LS	Mobilization 1-07	LS	$
2	1 FA	Minor Changes 1-04	FA	$ 30,000.00
3	1 LS	Spill Prevention, Control, and Countermeasures (SPCC) Plan 1-07	LS	$
4	5,500 HR	Flaggers and Spotters 1-10	$ per HR	$
5	700 HR	Other Traffic Control Labor 1-10	$ per HR	$
6	1 LS	Project Temporary Traffic Control 1-10	LS	$
7	1 LS	Clearing and Grubbing 2-01	LS	$
8	1 LS	Removal of Structures and Obstructions 2-02	LS	$
9	550 CY	Removing Portland Cement Concrete Pavement 2-02	$ per CY	$
10	6,100 LF-IN	Saw-cut ACP 2-02	$ per LF-IN	$
11	200 LF-IN	Saw-cut PCC 2-02	$ per LF-IN	$
12	9,350 CY	Roadway Excavation Incl. Haul 2-03	$ per CY	$

BID PROPOSAL FORM
City of Ferndale
Main Street Improvements (Douglas to Church)

ITEM NO.	APPROX. QUANTITY	ITEM	UNIT PRICE	TOTAL
13	1,500 CY	Unsuitable Foundation Excavation Incl. Haul 2-03	$ per CY	$
14	750 CY	Embankment Compaction 2-03	$ per CY	$
15	100 M.GAL	Water 2-07	$ per M.GAL	$
16	2100 CY	Structure Excavation Class A Incl. Haul 2-09	$ per CY	$
17	1 LS	Shoring or Extra Excavation Cl. A 2-09	LS	$
18	19,300 SY	Construction Geotextile for Subgrade Separation 2-12	$ per SY	$
19	1 FA	Selected Grading - Stream 2-13	FA	$ 20,000.00
20	24,000 Ton	Gravel Base 4-02	$ per Ton	$
21	1,750 Ton	Crushed Surfacing Top Course 4-04	$ per Ton	$
22	4,400 Ton	HMA Class 1/2" PG 64-22 5-04	$ per Ton	$
23	4,150 Ton	HMA Class 1" PG 64-22 5-04	$ per Ton	$
24	1 Calc	Job Mix Compliance Price Adjustment 5-04	$ 0.00 per Calc	$0.00

BID PROPOSAL FORM
City of Ferndale
Main Street Improvements (Douglas to Church)

ITEM NO.	APPROX. QUANTITY	ITEM	UNIT PRICE	TOTAL
25	1 Calc	Compaction Price Adjustment 5-04	$ 0.00 per Calc	$0.00
26	1 Calc.	Asphalt Cost Price Adjustment 5-04	$ 15,0000 per Calc.	$ 15,000.00
27	700 SY	Planing Bituminous Pavement 5-04	$ per SY	$
28	400 CY	Gravel Backfill for Wall 6-02	$ per CY	$
29	1 LS	Inverted 3 Sided Box Culvert 6-02	LS	$
30	300 LF	Pedestrian Railing 6-06	$ per LF	$
31	855 SF	Structural Earth Wall, Keystone 6-13	$ per SF	$
32	625 SF	Structural Earth Wall, Ultrablock 6-13	$ per SF	$
33	1 FA	Erosion/Water Pollution Control 8-01	FA	$ 15,000.00
34	1 LS	ESC Lead 8-01	LS	$
35	140 HR	Street Cleaning 8-01	$ per HR	$
36	40 EA	Inlet Protection 8-01	$ per EA	$

BID PROPOSAL FORM
City of Ferndale
Main Street Improvements (Douglas to Church)

ITEM NO.	APPROX. QUANTITY	ITEM	UNIT PRICE	TOTAL
37	150 LF	Check Dam 8-01	$ per LF	$
38	340 SY	Stabilized Construction Entrance 8-01	$ per SY	$
39	3,500 LF	Silt Fence 8-01	$ per LF	$
40	1 LS	SWPP Plan Preparation 8-01	LS	$
41	5,000 SY	Seeded Lawn Installation 8-02	$ per SY	$
42	1 FA	Landscape Restoration 8-02	FA	$ 25,000.00
43	600 CY	Topsoil Type A 8-02	$ per CY	$
44	5,900 LF	Cement Conc. Traffic Curb & Gutter 8-04	$ per LF	$
45	120 LF	Cement Conc. Pedestrian Curb 8-04	$ per LF	$
46	820 SY	Cement Conc. Driveway 8-06	$ per SY	$
47	25 HUND	Raised Pavement Markers, Type 1 8-09	$ per HUND	$
48	5 HUND	Raised Pavement Markers, Type 2 8-09	$ per HUND	$

BID PROPOSAL FORM
City of Ferndale
Main Street Improvements (Douglas to Church)

ITEM NO.	APPROX. QUANTITY	ITEM	UNIT PRICE	TOTAL
49	5 EA	Flexible Guide Post 8-10	$ per EA	$
50	100 LF	Temporary Fencing 8-12	$ per LF	$
51	2,170 SY	Cement Conc. Sidewalk 8-14	$ per SY	$
52	345 SY	Cement Conc. Sidewalk with Raised Edge 8-14	$ per SY	$
53	120 SY	Cement Conc. Sidewalk Thickened Edge 8-14	$ per SY	$
54	110 SY	C.I.P. Monolithic Wall Cap and Sidewalk 8-14	$ per SY	$
55	3 EA	Sidewalk Ramp Type Single Direction A 8-14	$ per EA	$
56	2 EA	Sidewalk Ramp Type Single Direction B 8-14	$ per EA	$
57	10 EA	Sidewalk Ramp Type Parallel A 8-14	$ per EA	$
58	1 EA	Sidewalk Ramp Type Parallel B 8-14	$ per EA	$
59	1 EA	Sidewalk Ramp Type Combination 8-14	$ per EA	$
60	4 EA	Mailbox Support, Type 1 8-18	$ per EA	$

BID PROPOSAL FORM
City of Ferndale
Main Street Improvements (Douglas to Church)

ITEM NO.	APPROX. QUANTITY	ITEM	UNIT PRICE	TOTAL
61	4 EA	Mailbox Support, Type 2 8-18	$ per EA	$
62	1 EA	Relocate Existing Cluster Mailbox Incl. Foundation 8-20	$ per EA	$
63	1 FA	Lighted Sign Relocate 8-20	FA	$ 5,000.00
64	1 LS	Permanent Signing 8-21	LS	$
65	20 EA	Plastic Traffic Arrow 8-22	$ per EA	$
66	6,500 LF	Paint Line 8-22	$ per LF	$
67	110 LF	Plastic Stop Bar, 18-Inch 8-22	$ per LF	$
68	21 EA	Plastic Traffic Letter 8-22	$ per EA	$
69	650 SF	Plastic Crosswalk Stripe 8-22	$ per SF	$
70	35 EA	Pothole Existing Underground Utility 8-30	$ per EA	$
71	1 FA	Repair Existing Public and Private Facilities 8-31	FA	$ 25,000.00
72	170 CY	Streambed Aggregate Mix 8-32	$ per CY	$

BID PROPOSAL FORM
City of Ferndale
Main Street Improvements (Douglas to Church)

ITEM NO.	APPROX. QUANTITY	ITEM	UNIT PRICE	TOTAL
73	50 CY	Streambed Boulder 8-32	$ per CY	$
74	1 LS	Temporary Stream Bypass System 8-33	LS	$

Total Schedule A $ _____

Schedule B - Storm Drain Items

75	33 EA	Remove Drainage Structures and Manholes 2-02	$ per EA	$
76	2,700 CY	Structure Excavation Class B Incl. Haul 2-09	$ per CY	$
77	20,000 SF	Shoring or Extra Excavation Class B 2-09	$ per SF	$
78	100 CY	Controlled Density Fill 2-09	$ per CY	$
79	6,000 Ton	Gravel Base 4-04	$ per Ton	$
80	340 LF	Corrugated Poly Storm Sewer Pipe, 36 In. Diam. 7-04	$ per LF	$
81	56 LF	Solid Wall PVC Storm Sewer Pipe 36 In. Diam. 7-04	$ per LF	$
82	1,420 LF	Corrugated Poly Storm Sewer Pipe, 24-Inch Diam. 7-04	$ per LF	$
83	315 LF	Corrugated Poly Storm Sewer Pipe, 18 In. Diam. 7-04	$ per LF	$
84	12 LF	Solid Wall PVC Storm Sewer Pipe 12 In. Diam. 7-04	$ per LF	$

BID PROPOSAL FORM
City of Ferndale
Main Street Improvements (Douglas to Church)

ITEM NO.	APPROX. QUANTITY	ITEM	UNIT PRICE	TOTAL
85	1,270 LF	Corrugated Poly Storm Sewer Pipe, 12 In. Diam. 7-04	$ per LF	$
86	625 LF	Ductile Iron Storm Sewer Pipe 12 In. Diam. 7-04	$ per LF	$
87	4,000 LF	Testing Storm Sewer Pipe 7-04	$ per LF	$
88	1 EA	36 In. Diam. Inline Check Valve 7-04	$ per EA	$
89	1 EA	12 In. Diam. Inline Check Valve 7-04	$ per EA	$
90	13 EA	Concrete Inlet 7-05	$ per EA	$
91	2 EA	Catch Basin Type II, 72 In. Diam. 7-05	$ per EA	$
92	5 EA	Catch Basin Type II, 60 In. Diam. 7-05	$ per EA	$
93	14 EA	Catch Basin Type II, 48 In. Diam. 7-05	$ per EA	$
94	1 EA	Catch Basin Type IL 7-05	$ per EA	$
95	15 EA	Catch Basin Type 1 7-05	$ per EA	$
96	4 EA	Solid Locking Frame and Cover 7-05	$ per EA	$

BID PROPOSAL FORM
City of Ferndale
Main Street Improvements (Douglas to Church)

ITEM NO.	APPROX. QUANTITY	ITEM	UNIT PRICE	TOTAL
97	1 LS	Adjustment to Finished Grade 7-05	LS	$
98	350 CY	Removal of Unsuitable Material Incl. Haul 7-08	$ per CY	$
99	500 TON	Quarry Spalls 8-15	$ per TON	$
100	15 EA	Pothole Existing Underground Utility 8-30	$ per EA	$

Total Schedule B $ _____

Schedule C - Sanitary Items

101	1,000 CY	Structure Excavation Class B Incl. Haul 2-09	$ per CY	$
102	9,400 SF	Shoring or Extra Excavation Class B 2-09	$ per SF	$
103	2,500 TON	Gravel Base 4-04	$ per TON	$
104	1 EA	Manhole 48 In. Diam. Type 1 7-05	$ per EA	$
105	1 EA	Manhole 60 In. Diam. Type 1 7-05	$ per EA	$
106	4 EA	Manhole 48 In. Diam. Type 3 7-05	$ per EA	$
107	1 EA	Manhole 84 In. Diam. Type 3 7-05	$ per EA	$
108	2 EA	Solid Locking Frame and Cover 7-05	$ per EA	$

BID PROPOSAL FORM
City of Ferndale
Main Street Improvements (Douglas to Church)

ITEM NO.	APPROX. QUANTITY	ITEM	UNIT PRICE	TOTAL
109	4 EA	Connect to Existing Manhole 7-05	$ per EA	$
110	1 LS	Adjustment to Finished Grade 7-05	LS	$
111	100 CY	Removal of Unsuitable Material Incl. Haul 7-08	$ per CY	$
112	210 LF	PVC Sanitary Sewer Pipe, 6 In. Diam. 7-17	$ per LF	$
113	35 LF	PVC Sanitary Sewer Pipe, 8 In. Diam. 7-17	$ per LF	$
114	615 LF	PVC Sanitary Sewer Pipe, 12 In. Diam. 7-17	$ per LF	$
115	200 LF	PVC Sanitary Sewer Pipe, 18 In. Diam. 7-17	$ per LF	$
116	70 LF	Bridge Supported D.I. for Sanitary Sewer Pipe,18 In. Diam. 7-17	$ per LF	$
117	700 LF	Testing Sewer Pipe 7-17	$ per LF	$
118	180 TON	Quarry Spalls 8-15	$ per TON	$
119	10 EA	Pothole Existing Underground Utility 8-30	$ per EA	$

Subtotal Sanitary Sewer $ _____

Sales Tax @ 8.7% (Schedule C) $ _____

Total Schedule C (Including Tax) $ _____

BID PROPOSAL FORM
City of Ferndale
Main Street Improvements (Douglas to Church)

ITEM NO.	APPROX. QUANTITY	ITEM	UNIT PRICE	TOTAL
		Schedule D - Water Main Items		
120	1,300 LF-IN	Sawcut ACP 2-02	$ per LF-IN	$
121	640 Ton	Gravel Base 4-02	$ per Ton	$
122	1 LS	Adjustment to Finished Grade 7-05	LS	$
123	295 LF	D.I. Pipe for Water Main 8 In. Diam. 7-09	$ per LF	$
124	725 LF	D.I. Pipe for Water Main 12 In. Diam. 7-09	$ per LF	$
125	8 EA	Stovepipe Watermain, 12 In. Diam. 7-09	$ per EA	$
126	10 EA	Connect to Existing Watermain 12 In. Diam. 7-09	$ per EA	$
127	1 EA	Connect to Existing Watermain 8 In. Diam. 7-09	$ per EA	$
128	2 EA	Blow off Assembly 7-09	$ per EA	$
129	1 LS	Testing Water Main 7-09	LS	$
130	1 EA	Gate Valve, 8 In. 7-12	$ per EA	$
131	9 EA	Gate Valve, 12 In. 7-12	$ per EA	$

BID PROPOSAL FORM
City of Ferndale
Main Street Improvements (Douglas to Church)

ITEM NO.	APPROX. QUANTITY	ITEM	UNIT PRICE	TOTAL
132	9 EA	Tapping Sleeve and Gate Valve Assembly, 12 In. x 8 In. 7-12	$ per EA	$
133	1 EA	Tapping Sleeve and Gate Valve Assembly, 12 In. x 6 In. 7-12	$ per EA	$
134	1 EA	Tapping Sleeve and Gate Valve Assembly, 8 In. x 6 In. 7-12	$ per EA	$
135	9 EA	Hydrant Assembly 7-14	$ per EA	$
136	13 EA	Service Connection 3/4 In. Diam. 7-15	$ per EA	$
137	4 EA	Service Connection 1 In. Diam. 7-15	$ per EA	$
138	2 EA	Service Connection 1 1/2 In. Diam. 7-15	$ per EA	$
139	15 EA	Pressure Reducing Valve (PRV) 7-15	$ per EA	$
140	15 EA	Pothole Existing Underground Utility 7-30	$ per EA	$

Subtotal Water Main $ _____

Sales Tax @ 8.7% (Schedule D) $ _____

Total Schedule D (Including Tax) $ _____

BID PROPOSAL FORM
City of Ferndale
Main Street Improvements (Douglas to Church)

ITEM NO.	APPROX. QUANTITY	ITEM	UNIT PRICE	TOTAL
		Schedule E - Conveyance and Pond		
141	1 LS	Mobilization 1-07	LS	$
142	1 LS	Contract Bond Extension 1-03	LS	$
143	1 FA	Minor Changes 1-04	FA	$ 20,000.00
144	1 LS	Spill Prevention, Control, and Countermeasures (SPCC) Plan 1-07	LS	$
145	1 LS	Project Temporary Traffic Control 1-10	LS	$
146	1 LS	Clearing and Grubbing 2-01	LS	$
147	1 LS	Removal of Structures and Obstructions 2-02	LS	$
148	900 LF-IN	Sawcut ACP 2-02	$ per LF-IN	$
149	6,000 CY	Unsuitable Foundation Excavation Incl. Haul 2-03	$ per CY	$
150	16,100 CY	Pond Excavation Incl. Haul 2-03	$ per CY	$
151	9,000 CY	Pond Embankment Compaction 2-03	$ per CY	$
152	50 M.GAL	Water 2-07	$ per M.GAL	$

BID PROPOSAL FORM
City of Ferndale
Main Street Improvements (Douglas to Church)

ITEM NO.	APPROX. QUANTITY	ITEM	UNIT PRICE	TOTAL
153	5,000 CY	Structure Excavation Class B Incl. Haul 2-09	$ per CY	$
154	21,850 SF	Shoring or Extra Excavation Class B 2-09	$ per SF	$
155	250 SY	Construction Geotextile for Soil Separation 2-12	$ per SY	$
156	5,100 TON	Gravel Base 4-02	$ per TON	$
157	660 TON	Crushed Surfacing Top Course 4-04	$ per TON	$
158	290 TON	HMA CL. 1/2 In. PG 64-22 5-04	$ per TON	$
159	10 LF	Corrugated Polyethylene Storm Sewer Pipe, 24 In. Diam 7-04	$ per LF	$
160	3,080 LF	Corrugated Polyethylene Storm Sewer Pipe, 36 In. Diam 7-04	$ per LF	$
161	3,060 LF	Testing Storm Sewer Pipe 7-04	$ per LF	$
162	1 EA	36 In. Diam. Pinch Valve 7-04	$ per EA	$
163	1 EA	Pond Outlet Control Structure Catchbasin 7-05	$ per EA	$
164	13 EA	Catch Basin Type 2, 60 In. Diam. 7-05	$ per EA	$
165	1 EA	Catch Basin Type 2, 72 In. Diam. 7-05	$ per EA	$

BID PROPOSAL FORM
City of Ferndale
Main Street Improvements (Douglas to Church)

ITEM NO.	APPROX. QUANTITY	ITEM	UNIT PRICE	TOTAL
166	1 EA	Storm Sewer Debris Barrier 36 In. Diam. 7-05	$ per EA	$
167	500 CY	Removal of Unsuitable Material Incl. Haul 7-08	$ per CY	$
168	170 SY	Stabilized Construction Entrance 8-01	$ per SY	$
169	100 HR	Street Cleaning 8-01	$ per HR	$
170	1,450 LF	Orange Silt Fence 8-01	$ per LF	$
171	500 LF	Silt Fence 8-01	$ per LF	$
172	1 FA	Landscape Restoration 8-01	FA	$ 2,000.00
173	1 FA	Erosion/Water Pollution Control 8-01	FA	$ 10,000.00
174	4,900 SY	Seeded Lawn Installation 8-02	$ per SY	$
175	7,500 SY	Wetland Seed Installation 8-02	$ per SY	$
176	125 CY	Topsoil Type A 8-02	$ per CY	$
177	1,130 CY	Topsoil Type B 8-02	$ per CY	$
178	2,127 EA	Pond Planting, Marsh speedwell 8-02	$ per EA	$

BID PROPOSAL FORM
City of Ferndale
Main Street Improvements (Douglas to Church)

ITEM NO.	APPROX. QUANTITY	ITEM	UNIT PRICE	TOTAL
179	2,127 EA	Pond Planting, Water parsley 8-02	$ per EA	$
180	2,127 EA	Pond Planting, Spike rush 8-02	$ per EA	$
181	2,127 EA	Pond Planting, Broadleaf arrowhead 8-02	$ per EA	$
182	2,127 EA	Pond Planting, Slough sedge 8-02	$ per EA	$
183	7,656 EA	Pond Planting, Small Fruited Bulrush 8-02	$ per EA	$
184	7,656 EA	Pond Planting, Water plantain 8-02	$ per EA	$
185	7,656 EA	Pond Planting, Burreed 8-02	$ per EA	$
186	4,253 EA	Pond Planting, Hardstem Bulrush 8-02	$ per EA	$
187	4,253 EA	Pond Planting, Softstem Bulrush 8-02	$ per EA	$
188	2 EA	Access Control Pipe Gate 8-12	$ per EA	$
189	650 TON	Quarry Spalls 8-15	$ per TON	$
190	50 LF	Paint Line 8-22	$ per LF	$

BID PROPOSAL FORM
City of Ferndale
Main Street Improvements (Douglas to Church)

ITEM NO.	APPROX. QUANTITY	ITEM	UNIT PRICE	TOTAL
191	50 SY	Gabion Mattresses 8-24	$ per SY	$
192	10 TON	Streambed Aggregate Mix 8-32	$ per TON	$
193	12 CY	Streambed Boulder 8-32	$ per CY	$
194	5 EA	Pothole Existing Underground Utility 8-30	$ per EA	$
195	1 FA	Repair Public and Private Facilities 8-31	FA	$ 15,000.00

Total Schedule E $ _____

Total Schedule A, B, C, D, and E (Including Sales Tax) $ _____

NON-COLLUSION DECLARATION

I, by signing the proposal, hereby declare, under penalty of perjury under the laws of the United States that the following statements are true and correct:

1. That the undersigned person(s), firm, association or corporation has (have) not, either directly or indirectly, entered into any agreement, participated in any collusion, or otherwise taken any action in restraint of free competitive bidding in connection with the project for which this proposal is submitted.

2. That by signing the signature page of this proposal, I am deemed to have signed and have agreed to the provisions of this declaration.

NOTICE TO ALL BIDDERS

To report bid rigging activities call:

1-800-424-9071

The U.S. Department of Transportation (USDOT) operates the above toll-free "hotline" Monday through Friday, 8:00 a.m. to 5:00 p.m., Eastern Time. Anyone with knowledge of possible bid rigging, bidder collusion, or other fraudulent activities should use the "hotline" to report such activities.

The "hotline" is part of USDOT's continuing effort to identify and investigate highway construction contract fraud and abuse and is operated under the direction of the USDOT Inspector General. All information will be treated confidentially and caller anonymity will be respected.

BIDDER IDENTIFICATION

The name of the Bidder submitting this proposal, the address and phone number to which all communications concerned with this proposal shall be made and the number which has been assigned indicating the Bidder is licensed to do business in the State of Washington are as follows:

Firm Name: _____

Address: _____

_____

Telephone: _____ Fax: _____

Contractor's Number: _____

The Firm submitting this proposal is a _____Sole Proprietorship
_____Partnership
_____Corporation

The names and titles of the principal officers of the corporation submitting this proposal, or of the partnership, or of all persons interested in this proposal as principals are as follows:

_____ _____
_____ _____
_____ _____
_____ _____

- - - -

BID PROPOSAL SIGNATURE AND ADDENDUM ACKNOWLEDGMENT

The bidder is hereby advised that by signature of this proposal he/she is deemed to have acknowledged all requirements and signed all certificates contained herein. A proposal guaranty in an amount of five percent (5%) of the total bid, based upon the approximation estimate of quantities at the above prices and in the form as indicated below, is attached hereto:

☐	CASH	IN THE AMOUNT OF_____
☐	CASHIER'S CHECK	_____DOLLARS
☐	CERTIFIED CHECK	($_____) PAYABLE TO THE CITY OF FERNDALE
☐	PROPOSAL BOND	IN THE AMOUNT OF 5% OF THE BID.

Receipt is hereby acknowledged by addendum(s) No.(s) _____, _____, & _____

SIGNATURE OF AUTHORIZED OFFICIAL(S)

(PROPOSAL MUST BE SIGNED) _____

_____
SIGNATURE

_____
FIRM NAME

STATE OF WASHINGTON)
) ss.
COUNTY OF WHATCOM)

On this _____ day of _____, 2012, before me personally appeared _____ to me personally known to be the person described in and who executed the above instrument and who acknowledged to me the act of signing thereof.

NOTARY PUBLIC, in and for the
State of Washington, residing at:

_____
My Commission Expires: _____

This proposal form is not transferable and any alteration of the firm's name entered hereon without prior permission from the City of Ferndale will be cause for considering the proposal irregular and for subsequent rejection of the bid.

BID BOND

KNOW ALL MEN BY THESE PRESENTS, that we of _____, as principal, and the _____a corporation duly organized under the laws of the State of _____and having its principal place of business at _____, in the State of Washington, as Surety, are held and firmly bound unto the City of Ferndale, a Municipal Corporation in the State of Washington, in the full and penal sum of five percent (5%) of the total bid amount appearing on the bid proposal of said principal for the work hereinafter described, for the payment of which, well and truly to be made, we bind our heirs, executors, administrators and assigns, and successors and assigns, jointly and severally, firmly by these presents.

The condition of this bond is such that, whereas, the principal herein is herewith submitting his or its bid proposal for, **MAIN STREET IMPROVEMENTS (DOUGLAS TO CHURCH)**, said bid proposal, by reference thereto, being hereby made a part hereof.

NOW, THEREFORE, if the said bid proposal submitted by the said PRINCIPAL be accepted, and the contract be awarded to said PRINCIPAL, and if said PRINCIPAL shall duly make and enter into and execute said contract and shall furnish the performance bond as required by the bidding and contract documents within a period of ten (10) days from and after said award, exclusive of the day of such award, then its obligation to pay the above-mentioned penal sum as liquidated damages shall be null and void, otherwise it shall remain and be in full force and effect.

SIGNED AND SEALED this _____ day of _____, 2012.

Principal

By _____ (Seal)

Surety

By _____
Attorney-In-Fact

The Attorney-in-fact who executes this bond on behalf of the surety company, must attach a copy of his power-of-attorney as evidence of his authority.

Local Agency Name
Local Agency Address

Local Agency Subcontractor List

Prepared in compliance with RCW 39.30.060 as amended

To Be Submitted with the Bid Proposal

Project Name _____

Failure to list subcontractors who are proposed to perform the work of HVAC (heating, ventilation and air conditioning), plumbing, as described in Chapter 18.106 RCW, and electrical as described in Chapter 19.28 RCW, or naming more than one subcontractor to perform the same work will result in your bid being non-responsive and therefore void.

Subcontractor(s) that are proposed to perform the work of heating, ventilation and air conditioning, plumbing, as described in chapter 18.106 RCW, and electrical as described in chapter 19.28 RCW must be listed below. The work to be performed is to be listed below the subcontractor(s) name. The requirement to name the prime contract bidder's proposed HVAC, plumbing and electrical subcontractors applies only to proposed HVAC, plumbing, and electrical subcontractors who will contract directly with the prime contract bidder submitting the bid to the public entity.

If no subcontractor is listed below, the bidder acknowledges that it does not intend to use any subcontractor to perform those items of work.

Subcontractor Name _____
Work to be Performed _____

Subcontractor Name _____
Work to be Performed _____

Subcontractor Name _____
Work to be Performed _____

Subcontractor Name _____
Work to be Performed _____

Subcontractor Name _____
Work to be Performed _____

Bidder's are notified that in the opinion of the enforcement agency PVC or metal conduit, junction boxes, etc, are considered electrical equipment and must be installed by a licensed electrical contractor, even if the installation is for future use and no wiring or electric current is connected during the project.
A licensed electrical contractor must be listed to perform the work.

SPECIFICATIONS AND CONDITIONS

(This Page Intentionally Left Blank)

INTRODUCTION

The following Amendments and Special Provisions shall be used in conjunction with the 2012 Standard Specifications for Road, Bridge, and Municipal Construction.

AMENDMENTS TO THE STANDARD SPECIFICATIONS

The following Amendments to the Standard Specifications are made a part of this contract and supersede any conflicting provisions of the Standard Specifications. For informational purposes, the date following each Amendment title indicates the implementation date of the Amendment or the latest date of revision.

Each Amendment contains all current revisions to the applicable section of the Standard Specifications and may include references which do not apply to this particular project.

Section 1-01, Definition and Terms
January 2, 2012

1-01.3 Definitions
The definition for **"Bid Documents"** is revised to read:

> The component parts of the proposed Contract which may include, but are not limited to, the Proposal Form, the proposed Contract Provisions, the proposed Contract Plans, Addenda, and, for projects with Contracting Agency subsurface investigations, the Summary of Geotechnical Conditions and subsurface boring logs (if any).

Section 1-02, Bid Procedures and Conditions
January 2, 2012

1-02.4(2) Subsurface Information
The first two sentences in the first paragraph are revised to read:

> If the Contracting Agency has made subsurface investigation of the site of the proposed work, the boring log data, soil sample test data, and geotechnical recommendations reports obtained by the Contracting Agency will be made available for inspection by the Bidders at the location specified in the Special Provisions. The Summary of Geotechnical Conditions, as an appendix to the Special Provisions, and the boring logs shall be considered as part of the Contract.

Section 1-03, Award and Execution of Contract
April 2, 2012

1-03.1(1) Tied Bids
This section's title is revised to read:

1-03.1(1) Identical Bid Totals

Section 1-08, Prosecution and Progress
April 2, 2012

1-08.1 Subcontracting
In the eighth paragraph, "Contracting Agency" is revised to read "WSDOT".

1-08.3(1) General Requirements
The following new paragraph is inserted after the first paragraph:

> Total float belongs to the project and shall not be for the exclusive benefit of any party.

1-08.7 Maintenance During Suspension
The second paragraph is revised to read:

> At no expense to the Contracting Agency, the Contractor shall provide through the construction area safe, smooth, and unobstructed roadways and pedestrian access routes for public use during the suspension (as required in Section 1-07.23 or the Special Provisions.) This may include a temporary road, alternative pedestrian access route or detour.

Section 1-09, Measurement and Payment
April 2, 2012

1-09.2(5) Measurement
The second sentence in the first paragraph is revised to read:

> The frequency of verification checks will be such that at least one test weekly is performed for each scale used in weighing contract items of Work.

Section 3-04, Acceptance of Aggregate
April 2, 2012

3-04.3(7)D4 An Entire Lot
The last sentence is deleted.

3-04.5 Payment
In the second paragraph, the reference "Section 3-04.3(6)C " is revised to read "Section 3-04.3(8)".

In Table 1, the row containing the item "Gravel Borrow for Geosynthetic Retaining Wall" is revised to read:

9-03.14(4)	Gravel Borrow for Geosynthetic Retaining Wall	4000	2000	$30	$60

Section 5-01, Cement Concrete Pavement Rehabilitation
April 2, 2012

5-01.3(2)B Portland Cement Concrete
The fifth sentence in the third paragraph is revised to read:

> The lower Specification limit for compressive strength shall be 4,000-psi.

The last two sentences in the third paragraph are deleted.

5-01.3(11) Concrete Slurry
This section including title is revised to read:

> **5-01.3(11) Concrete Slurry and Grinding Residue**
> All concrete slurry and grinding residue shall be removed from the pavement surface on a continual basis immediately behind the grinding or cutting operations. Slurry shall not be allowed to drain into an area open to traffic, off of the paved surface or into any drainage structure.
>
> The Contractor shall collect the concrete slurry and grinding residue from the pavement surface and dispose of it in accordance with Section 2-03.3(7)C.
>
> Opening to traffic shall meet the requirements of Section 5-05.3(17).

Section 5-04, Hot Mix Asphalt
April 2, 2012

5-04.3(10)B3 Longitudinal Joint Density
The section including title is revised to read:

> **5-04.3(10)B3 Vacant**

Section 6-02, Concrete Structures
April 2, 2012

6-02.3(16) Plans for Falsework and Formwork
Item No. 4 in the seventh paragraph is revised to read:

> 4. Conditions required by other Sections of 6-02.3(17), Falsework and Formwork.

Item's No. 5, 6, 7, and 8 in the seventh paragraph are deleted.

The following paragraph is inserted after the seventh paragraph:

Plan approval can be done by the Project Engineer for footings and walls 4 to 8 feet high (excluding pedestal height) provided:

1. Concrete placement rate is 4 feet per hour or less.

2. Facing is ¾-inch plywood with grades as specified per Section 6-02.3(17)I.

3. Studs, with plywood face grain perpendicular, are 2 by 4's spaced at 12 inches.

4. Walers with 3,000 pound safe working load ties spaced at 24 inches are two 2 by 4's spaced at 24 inches.

6-02.3(17)F Bracing
In the first paragraph, the phrase "per Section 6-02.3(17)I" is revised to read "in accordance with Section 6-02.3(17)I".

This section is supplemented with the following new sub-section:

6-02.3(17)F5 Temporary Bracing for Bridge Girders During Diaphragm and Bridge Deck Concrete Placement
Prestressed concrete girders shall be braced to resist forces that would cause rotation or torsion in the girders caused by the placing of precast concrete deck panels and concrete for the bridge deck.

Bracing shall be designed and detailed by the Contractor and shall be shown in the falsework/formwork plans submitted to the Engineer for approval. These braces shall be furnished, installed, and removed by the Contractor at no additional cost to the Contracting Agency. The Contractor may consider the bracing effects of the diaphragms in developing the falsework/formwork plans. The Contractor shall account for the added load from concrete finishing machines and other construction loadings in the design of the bracing.

Falsework support brackets and braces shall not be welded to structural steel bridge members or to steel reinforcing bars.

6-02.3(17)F4 Temporary Bracing for Bridge Girders
This section including title is revised to read:

6-02.3(17)F4 Temporary Bracing for Bridge Girders During Erection
Steel girders shall be braced in accordance with Section 6-03.3(7)A.

Prestressed concrete girders shall be braced sequentially during girder erection. The bracing shall be designed and detailed by the Contractor and shall be shown in the falsework/formwork plans submitted to the Engineer for approval. The Contractor shall furnish, install, and remove the bracing at no additional cost to the Contracting Agency.

At a minimum, the Contractor shall brace girders at each end and at midspan to prevent lateral movement or rotation. This bracing shall be placed prior to the release of each girder from the erection equipment. If the bridge is constructed with cast-in-place concrete

diaphragms, the bracing may be removed once the concrete in the diaphragms has been placed and cured for a minimum of 24 hours.

6-02.3(25)N Prestressed Concrete Girder Erection
The third sentence in the fifth paragraph is revised to read:

The girders shall be braced in accordance with Sections 6-02.3(17)F4 and 6-02.3(17)F5.

6-02.3(26)E5 Leak Tightness Testing
The first sentence in the first paragraph is revised to read:

The Contractor shall test each completed duct assembly for leak tightness after placing concrete but prior to placing post tensioning reinforcement.

The second paragraph is revised to read:

Prior to testing, all grout caps shall be installed and all vents, grout injection ports, and drains shall either be capped or have their shut-off valves closed. The Contractor shall pressurize the completed duct assembly to an initial air pressure of 50 psi. This pressure shall be held for five minutes to allow for internal adjustments within the assembly. After five minutes, the air supply valve shall be closed. The Contractor shall monitor and measure the pressure maintained within the closed assembly, and any subsequent loss of pressure, over a period of one minute following the closure of the air supply valve. The maximum pressure loss for duct assemblies equal to or less than 150 feet in length shall be 25 psig. The maximum pressure loss for duct assemblies greater than 150 feet in length shall be 15 psig. If the pressure loss exceeds the allowable, locations of leakage shall be identified, repaired or reconstructed using methods approved by the Engineer. The repaired system shall then be retested. The cycle of testing, repair and retesting of each completed duct assembly shall continue until the completed duct assembly completes a test with pressure loss within the specified amount.

Section 6-03, Steel Structures
April 2, 2012

6-03.3(28)A Method of Shop Assembly
The first sentence in Item 2.C. is revised to read:

For Trusses and Girders – After the first stage has been completed, each subsequent stage shall be assembled to include: at least one truss panel or girder shop section of the previous stage and two or more truss panels or girder shop sections added at the advancing end.

Section 6-07, Painting
April 2, 2012

6-07.3(9)A Paint System
The first sentence in the second paragraph is revised to read:

All paint coating components of the selected paint system shall be produced by the same manufacturer.

6-07.3(10)H Paint System
The first and second sentences in the second paragraph are revised to read:

All paint coating components of the selected paint system shall be produced by the same manufacturer.

Section 6-10, Concrete Barrier
April 2, 2012

6-10.5 Payment
In the second paragraph, the bid item "Conc. Class 4000" is revised to read:

"Conc. Class 4000___"

Section 6-12, Noise Barrier Walls
January 2, 2012

6-12.3(3) Shaft Construction
The third sentence in the fifth paragraph is revised to read:

When efforts to advance past the obstruction to the design shaft tip elevation result in the rate of advance of the shaft drilling equipment being significantly reduced relative to the rate of advance for the rest of the shaft excavation, then the Contractor shall remove the obstruction under the provisions of Section 6-12.5.

6-12.5 Payment
This section is supplemented with the following:

"Removing Noise Barrier Wall Shaft Obstructions", estimated.

Payment for removing obstructions, as defined in Section 6-12.3(3), will be made for the changes in shaft construction methods necessary to remove the obstruction. The Contractor and the Engineer shall evaluate the effort made and reach agreement on the equipment and employees utilized, and the number of hours involved for each. Once these cost items and their duration have been agreed upon, the payment amount will be determined using the rate and markup methods specified in Section 1-09.6. For the purpose of providing a common proposal for all bidders, the Contracting Agency has entered an amount for the item "Removing Noise Barrier Wall Shaft Obstructions" in the bid proposal to become a part of the total bid by the Contractor.

If the shaft construction equipment is idled as a result of the obstruction removal work and cannot be reasonably reassigned within the project, then standby payment for the idled equipment will be added to the payment calculations. If labor is idled as a result of the obstruction removal work and cannot be reasonably reassigned within the project, then all

labor costs resulting from Contractor labor agreements and established Contractor policies will be added to the payment calculations.

The Contractor shall perform the amount of obstruction work estimated by the Contracting Agency within the original time of the contract. The Engineer will consider a time adjustment and additional compensation for costs related to the extended duration of the shaft construction operations, provided:

1. the dollar amount estimated by the Contracting Agency has been exceeded, and;

2. the Contractor shows that the obstruction removal work represents a delay to the completion of the project based on the current progress schedule provided in accordance with Section 1-08.3.

Section 6-14, Geosynthetic Retaining Walls
January 2, 2012

6-14.2 Materials
The referenced section for the following item is revised to read:

Grout	9-20.3(4)

In the first paragraph, the following items are inserted after the item "Gravel Borrow For Geosynthetic Retaining Wall":

Polyurethane Sealant	9-04.2(3)
Closed Cell Foam Backer Rod	9-04.2(3)A

Section 6-15, Soil Nail Walls
January 2, 2012

6-15.2 Materials
The referenced section for the following item is revised to read:

Grout	9-20.3(4)

6-15.3(3) Submittals
Item f beneath item number 3 is revised to read:

f. Mix design and procedures for placing the grout.

6-15.3(6) Soil Nailing
This section is supplemented with the following:

The Contractor shall make and cure grout cubes once per day in accordance with WSDOT Test Method T 813. These samples shall be retained by the Contractor until all associated verification and proof testing of the soil nails has been successfully completed. If the

Contractor elects to test the grout cubes for compressive strength, testing shall be conducted by an independent laboratory and shall be in accordance with the WSDOT FOP for AASHTO T106.

Section 6-16, Soldier Pile and Soldier Pile Tieback Walls
January 2, 2012

6-16.3(3) Shaft Excavation
The third sentence in the seventh paragraph is revised to read:

When efforts to advance past the obstruction to the design shaft tip elevation result in the rate of advance of the shaft drilling equipment being significantly reduced relative to the rate of advance for the rest of the shaft excavation, then the Contractor shall remove the obstruction under the provisions of Section 6-16.5.

6-16.5 Payment
This section is supplemented with the following:

"Removing Soldier Pile Shaft Obstructions", estimated.

Payment for removing obstructions, as defined in Section 6-16.3(3), will be made for the changes in shaft construction methods necessary to remove the obstruction. The Contractor and the Engineer shall evaluate the effort made and reach agreement on the equipment and employees utilized, and the number of hours involved for each. Once these cost items and their duration have been agreed upon, the payment amount will be determined using the rate and markup methods specified in Section 1-09.6. For the purpose of providing a common proposal for all bidders, the Contracting Agency has entered an amount for the item "Removing Soldier Pile Shaft Obstructions" in the bid proposal to become a part of the total bid by the Contractor.

If the shaft construction equipment is idled as a result of the obstruction removal work and cannot be reasonably reassigned within the project, then standby payment for the idled equipment will be added to the payment calculations. If labor is idled as a result of the obstruction removal work and cannot be reasonably reassigned within the project, then all labor costs resulting from Contractor labor agreements and established Contractor policies will be added to the payment calculations.

The Contractor shall perform the amount of obstruction work estimated by the Contracting Agency within the original time of the contract. The Engineer will consider a time adjustment and additional compensation for costs related to the extended duration of the shaft construction operations, provided:

1. the dollar amount estimated by the Contracting Agency has been exceeded, and;

2. the Contractor shows that the obstruction removal work represents a delay to the completion of the project based on the current progress schedule provided in accordance with Section 1-08.3.

Section 6-17, Permanent Ground Anchors
January 2, 2012

6-17.3(3) Submittals
The first sentence in the sixth paragraph is revised to read:

> The Contractor shall submit the mix design for the grout conforming to Section 9-20.3(4) and the procedures for placing the grout to the Engineer for approval.

6-17.3(7) Installing Permanent Ground Anchors
The following new paragraph is inserted after the sixth paragraph:

> The Contractor shall make and cure grout cubes once per day in accordance with WSDOT Test Method T 813. These samples shall be retained by the Contractor until all associated verification, performance and proof testing of the permanent ground anchors has been successfully completed. If the Contractor elects to test the grout cubes for compressive strength, testing shall be conducted by an independent laboratory and shall be in accordance with the WSDOT FOP for AASHTO T106.

Section 7-02, Culverts
April 2, 2012

7-02.5
The bid item "Steel Rib Reinforced Polyethylene Culvert Pipe _____ In. Diam.", per linear foot is revised to read:

> "St. Rib Reinf Polyethlene Culv. Pipe _____ In. Diam.", per linear foot

Section 7-04, Storm Sewers
April 2, 2012

7-04.3(1)B Exfiltration Test – Storm Sewers
The fifth column title "PE[4]" is revised to read "PP[4]" from the table titled, "**Storm Sewer Pipe Schedules".**

7-04.5
The bid item "Steel Rib Reinforced Polyethylene Storm Sewer Pipe _____ In Diam", per linear foot is revised to read:

> "St. Rib Reinf Polyethlene Storm Sewer Pipe _____ In. Diam", per linear foot

Section 7-05, Manholes, Inlets, Catch Basins, and Drywells
April 2, 2012

7-05.3 Construction Requirements
The third paragraph is supplemented with the following:

Leveling and adjustment devices that do not modify the structural integrity of the metal frame, grate or cover, and do not void the originating foundry's compliance to these specifications and warranty is allowed. Approved leveling devices are listed in the Qualified Products List. Leveling and adjusting devices that interfere with the backfilling, backfill density, grouting and asphalt density will not be allowed. The hardware for leveling and adjusting devices shall be completely removed when specified by the Project Engineer.

Section 8-01, Erosion Control and Water Pollution Control
April 2, 2012

8-01.3(2)D Mulching
The following two new paragraphs are inserted after the fourth paragraph:

Short-Term Mulch shall be hydraulically applied at the rate of 2500 pounds per acre and may be applied in one lift.

Moderate-Term Mulch and Long-Term Mulch shall be hydraulically applied at the rate of 3500 pounds per acre with no more than 2000 pounds applied in any single lift.

8-01.3(2)E Soil Binders and Tacking Agents
The first paragraph is revised to read:

Tacking agents or soil binders applied using a hydroseeder shall have a mulch tracer added to visibly aid uniform application. This tracer shall not be harmful to plant, aquatic, or animal life. A minimum of 125 pounds per acre and a maximum of 250 pounds per acre of Short-Term Mulch shall be used as a tracer.

The last two paragraphs are deleted.

8-01.3(2)F Dates for Application of Final Seed, Fertilizer, and Mulch
In the first paragraph, "Engineer" is revised to read "Project Engineer".

Note 1 of the table in the first paragraph is revised to read:

[1] Where Contract timing is appropriate, seeding, fertilizing, and mulching shall be accomplished during the fall period listed above

The third paragraph is deleted.

8-01.3(5) Placing Plastic Covering
The second and third paragraphs are revised to read:

Clear plastic covering shall be used to promote seed germination when seeding is performed outside of the Dates for Application of Final Seed in Section 8-01.3(2)F. Black plastic covering shall be used for stockpiles or other areas where vegetative growth is unwanted.

The plastic cover shall be installed and maintained in a way that prevents water from cutting under the plastic and prevents the plastic cover from blowing open in the wind.

8-01.3(6) Check Dams
This section is revised to read:

Check dams shall be installed as soon as construction will allow, or when designated by the Engineer. The Contractor may substitute a different check dam, in lieu of what is specified in the contract, with approval of the Engineer. The check dam is a temporary or permanent structure, built across a minor channel. Water shall not flow through the check dam structure. Check dams shall be constructed in a manner that creates a ponding area upstream of the dam to allow pollutants to settle, with water from increased flows channeled over a spillway in the check dam. The check dam shall be constructed to prevent erosion in the area below the spillway. Check dams shall be placed perpendicular to the flow of water and installed in accordance with the Standard Plans. The outer edges shall extend up the sides of the conveyance to prevent water from going around the check dam. Check dams shall be of sufficient height to maximize detention, without causing water to leave the ditch. Check dams shall meet the requirements in Section 9-14.5(4).

8-01.3(7) Stabilized Construction Entrance
The first paragraph is revised to read:

Temporary stabilized construction entrance shall be constructed in accordance with the Standard Plans, prior to beginning any clearing, grubbing, embankment or excavation. All quarry spall material used for stabilized construction entrance shall be free of extraneous materials that may cause or contribute to track out.

8-01.3(9)B Gravel Filter, Wood Chip, or Compost Berm
The first paragraph is revised to read:

Filter berms shall retain sediment and direct flows. The gravel filter berm shall be a minimum of 1 foot in height and shall be maintained at this height for the entire time they are in use. Rock material used for filter berms shall meet the grading requirements in Section 9-03.9(2), but shall not include any recycled materials as outlined in Section 9-03.21.

8-01.3(9)C Straw Bale Barrier
This section including title is revised to read:

8-01.3(9)C Vacant

8-01.3(11) Vacant
This section including title is revised to read:

8-01.3(11) Outlet Protection
Outlet protection shall prevent scour at the outlets of ponds, pipes, ditches or other conveyances. All quarry spall material used for outlet protection shall be free of extraneous material and meet the gradation requirements in Section 9-13.6.

8-01.3(13) Temporary Curb
This section is revised to read:

Temporary curbs shall divert or redirect water around erodible soils.

Temporary curbs shall be installed along pavement edges to prevent runoff from flowing onto erodible slopes. Water shall be directed to areas where erosion can be controlled. The temporary curbs shall be a minimum of 4 inches in height. Ponding shall not be in roadways.

8-01.4 Measurement
The third paragraph is revised to read:

Check dams will be measured per linear foot one time only along the completed check dam. No additional measurement will be made for check dams that are required to be rehabilitated or replaced due to wear.

This section is supplemented with the following:

Outlet Protection will be measured per each initial installation at an outlet location.

8-01.5 Payment
This section is supplemented with the following:

"Outlet Protection", per each.

Section 8-02, Roadside Restoration
April 2, 2012

8-02.5 Payment
The paragraph following bid item "Coarse Compost", per cubic yard" is revised to read:

The unit Contract price per cubic yard for "Fine Compost", Medium Compost" or "Coarse Compost" shall be full pay for furnishing and spreading the compost onto the existing soil.

Section 8-03, Irrigation Systems
April 2, 2012

8-03.3(7) Flushing and Testing
The fifth paragraph is deleted.

Section 8-04, Curbs, Gutters, and Spillways
April 2, 2012

8-04.3(1) Cement Concrete Curbs, Gutters, and Spillways
This section is supplemented with the following new sub-section:

8-04.3(1)B Roundabout Cement Concrete Curb and Gutter
Roundabout cement concrete curb and gutter and roundabout splitter island nosing curb shall be shaped and finished to match the shape of the adjoining curb as shown in the Plans. All other requirements for cement concrete curb and cement concrete curb and gutter shall apply to roundabout cement concrete curb and gutter.

8-04.4 Measurement
This section is supplemented with the following:

Roundabout splitter island nosing curb will be measured per each.

8-04.5 Payment
The bid item, "Roundabout Truck Apron Cement Concrete Curb", per linear foot is deleted.

This section is supplemented with the following:

"Roundabout Cement Concrete Curb and Gutter", per linear foot

The unit Contract price per linear foot for "Roundabout Cement Concrete Curb and Gutter" shall be full payment for all costs for the Work including transitioning the roundabout cement concrete curb and gutter to the adjoining curb shape.

"Roundabout Splitter Island Nosing Curb", per each.

The unit Contract price per each for "Roundabout Splitter Island Nosing Curb" shall be full payment for all costs for the Work including transitioning the roundabout splitter island nosing curb to the adjoining curb shape.

Section 8-12, Chain Link Fence and Wire Fence
April 2, 2012

In this Section "Engineer" is revised to read "Project Engineer".

8-12.1 Materials
This section is supplemented with the following:

Paint 9-08.1(2)B

8-12.3(1)A Posts
The words "for Type 3 and Type 4 fences" and "on Type 3 and Type 4 fences" are deleted from this section.

The first sentence of the fifth paragraph is revised to read:

> After the post is set and plumbed, the hole shall be filled with Grout Type 4.

The third sentence in the sixth paragraph is replaced with the following two sentences:

> After the post is set and plumbed, the hole in the portion of the post in solid rock shall be filled with Grout Type 4. The grout shall be thoroughly worked into the hole so as to leave no voids.

The seventh paragraph is deleted.

The ninth paragraph is revised to read:

> Steep slopes or abrupt topography may require changes in various elements of the fence. It shall be the responsibility of the Contractor to provide all posts of sufficient length to accommodate the chain link fabric.

The tenth paragraph is revised to read:

> All round posts shall have approved top caps fastened securely to the posts. The base of the top cap fitting for round posts shall feature an apron around the outside of the posts.

8-12.3(1)B Top Rail
This section's content including title is deleted and replaced with:

> **8-12.3(1)B Vacant**

8-12.3(1)C Tension Wire and Tension Cable
This section's content including title is revised to read:

> **8-12.3(1)C Tension Wire**
> Tension Wires shall be attached to the posts as detailed in the Plans or as approved by the Engineer.

8-12.3(1)D Chain Link Fabric
The first three paragraphs are revised to read:

> Chain link fabric shall be attached after the cables and wires have been properly tensioned.
>
> Chain link fabric shall be placed on the face of the post away from the Highway, except on horizontal curves where it shall be placed on the face on the outside of the curve unless otherwise directed by the Project Engineer.

Chain link fabric shall be placed approximately 1-inch above the ground and on a straight grade between posts by excavating high points of ground. Filling of depressions will be permitted only upon approval of the Project Engineer.

The third sentence of the fourth paragraph is revised to read:

The top and bottom edge of the fabric shall be fastened with hog rings to the top and bottom tension wires as may be applicable, spaced at 24-inch intervals.

8-12.3(1)E Chain Link Gates
The third paragraph is deleted.

8-12.3(2)A Posts
In the second paragraph, "commercial" is deleted.

The first sentence of the fifth paragraph is revised to read:

After the post is set and plumbed, the hole shall be filled with Grout Type 4.

The fourth sentence in the sixth paragraph is replaced with the following two sentences:

After the post is set and plumbed, the hole in the portion of the post in solid rock shall be filled with Grout Type 4. The grout shall be thoroughly worked into the hole so as to leave no voids.

The tenth paragraph is revised to read:

Where the new fence joins an existing fence, the 2 shall be attached in a manner satisfactory to the Project Engineer, and end or corner posts shall be set as necessary.

The eleventh paragraph is deleted.

8-12.5 Payment
The paragraph following the item "Chain Link Fence Type ____", per linear foot is revised to read:

The unit Contract price per linear foot for "Chain Link Fence Type ___" shall be full payment for all costs for the specified Work including brace post installation and all other requirements of Section 8-12 for Chain Link Fence, unless covered in a separate Bid Item in this Section.

The following paragraph is inserted after the item "End, Gate, Corner, and Pull Post for Chain Link Fence", per each:

The unit Contract price per each for "End, Gate, Corner, and Pull Post for Chain Link Fence" shall be full payment for all costs for the specified Work.

The following paragraph is inserted after the item "Single 6 Ft. Chain Link Gate", per each:

> The unit Contract price per each for "Double 14 Ft. Chain Link Gate", "Double 20 Ft. Chain Link Gate", and "Single 6 Ft. Chain Link Gate", shall be full payment for all costs for the specified Work.

The following paragraph is inserted after the item "Wire Fence Type ____", per linear foot:

> The unit Contract price per each for "Wire Fence Type ____" shall be full payment for all costs for the specified Work including payment for clearing of the fence line.

The following paragraph is inserted after the item "Double Wire Gate 20 Ft. Wide", per each:

> The unit contract price per each for "Single Wire Gate 14 Ft. Wide" and "Double Wire Gate 20 Ft. Wide" shall be full payment for all costs for the specified Work.

The paragraph following the item "Access Control Gate", per each is revised to read:

> The unit contract price per each for "Access Control Gate" shall be full payment for all costs to perform the specified Work.

Section 8-15, Riprap
April 2, 2012

8-15.1 Description
The second paragraph is revised to read:

> Riprap will be classified as heavy loose riprap, light loose riprap, and hand placed riprap.

Section 8-20, Illumination, Traffic Signal Systems, And Electrical
January 2, 2012

8-20.3(9) Bonding, Grounding
The first sentence in the second paragraph is replaced with the following two sentences:

> All conduit installed shall have an equipment ground conductor installed in addition to the conductors noted in the Contract. Conduit with innerducts shall have an equipment ground conductor installed in each innerduct that has an electrical conductor.

Section 8-21, Permanent Signing
April 2, 2012

8-21.2 Materials
The third sentence is revised to read:

> Materials for sign mounting shall conform to Section 9-28.11.

8-21.3(9)A Fabrication of Steel Structures
The first sentence in the first paragraph is revised to read:

Fabrication shall conform to the applicable requirements of Section 6-03 and 9-06.

This section is supplemented with the following:

All fabrication, including repairs, adjustments or modifications of previously fabricated sign structure members and connection elements, shall be performed in the shop, under an Engineer approved shop drawing prepared and submitted by the Contractor for the original fabrication or the specific repair, adjustment or modification. Sign structure fabrication repair, adjustment or modification of any kind in the field is not permitted. If fabrication repair, adjustment or modification occurs after a sign structure member or connection element has been galvanized, the entire member or element shall be re-galvanized in accordance with AASHTO M 111.

8-21.3(9)B Vacant
This section including title is revised to read:

8-21.3(9)B Erection of Steel Structures
Erection shall conform to the applicable requirements of Sections 6-03 and 8-21.3(9)F. Section 8-21.3(9)F notwithstanding, the Contractor may erect a sign bridge prior to completion of the shaft cap portion of one foundation for one post provided the following conditions are satisfied:

1. The Contractor shall submit design calculations and working drawings of the temporary supports and falsework supporting the sign bridge near the location of the incomplete foundation to the Engineer for approval in accordance with Section 6-01.9. The submittal shall include the method of releasing and removing the temporary supports and falsework without inducing loads and stress into the sign bridge.

2. The Contractor shall submit the method used to secure the anchor bolt array in proper position with the sign bridge while casting the shaft cap concrete to complete the foundation.

3. The Contractor shall erect the sign bridge and temporary supports and falsework, complete the remaining portion of the incomplete foundation, and remove the temporary supports and falsework, in accordance with the working drawing submittals as approved by the Engineer.

8-21.3(9)F Foundations
The eighth paragraph is replaced with the following three new paragraphs:

After construction of concrete foundations for sign bridge and cantilever sign structures, the Contractor shall survey the foundation locations and elevations, the anchor bolt array

locations and lengths of exposed threads. The Contractor shall confirm that the survey conforms to the sign structure post, beam, span and foundation design geometry shown in the Plans, and shall identify any deviations from the design geometry shown in the Plans. When deviations are identified, the Contractor shall notify the Engineer, and such notice shall be accompanied by the Contractor's proposed method(s) of addressing the deviations, including removal and reconstruction of the shaft cap portion of the affected concrete foundation as outlined in this Section, or fabrication repair, adjustment or modification, with associated shop drawings, in accordance with Section 8-21.3(9)A.

If the Contractor's survey indicates that a concrete foundation has been constructed incorrectly for a sign structure that has already been fabricated, the Contractor may remove and reconstruct the shaft cap portion of the foundation, in accordance with Section 1-07.13, provided the following conditions are satisfied:

1. The Contractor shall submit the method and equipment to be used to remove the portion of the concrete foundation to be removed and reconstructed to the Engineer for approval in accordance with Section 1-05.3. The submittal shall include confirmation that the equipment and the method of operation is appropriate to ensure that the existing anchor bolt array and primary shaft vertical steel reinforcing bars will not be damaged.

2. All steel reinforcing bars, except for steel reinforcing bars extending from the bottom portion of the foundation to remain, shall be removed and disposed of in accordance with Sections 2-02.3 and 2-03.3(7)C, and shall be replaced with new steel reinforcing bars conforming to the size, dimensions and geometry shown in the Plans. All concrete of the removed portion of the foundation shall be removed and disposed of in accordance with Sections 2-02.3 and 2-03.3(7)C.

3. The Contractor shall adjust the primary shaft vertical steel reinforcing bars as necessary in accordance with Section 6-02.3(24)C to provide clearance for the anchor bolt array.

Sign structures shall not be erected on concrete foundations until the Contractor confirms that the foundations and the fabricated sign structures are either compatible with each other and the design geometry shown in the Plans, or have been modified in accordance with this Section and as approved by the Engineer to be compatible with each other, and the foundations have attained a compressive strength of 2,400-psi.

8-21.5 Payment

This section is supplemented with the following:

All costs in connection with surveying completed concrete foundations for sign bridges and cantilever sign structures shall be included in the lump sum contract price for "Structure Surveying", except that when no Bid item is included in the Proposal for "Structure Surveying" then such costs shall be included in the lump sum contract price(s) for "Sign Bridge No. ___" and "Cantilever Sign Structure No. ___".

Section 8-25, Glare Screen
April 2, 2012

In this section, "tension cable" and "cable" are deleted.

8-25.3(3) Posts
The first sentence in the first paragraph is revised to read:

> Posts shall be constructed in accordance with the Standard Plans and applicable provisions of Section 8-12.3(1)A.

The last paragraph is revised to read:

> All round posts for Type 1 Design B and Type 2 glare screen shall be fitted with a watertight top securely fastened to the post. Line posts shall have tops designed to carry the top tension wire.

8-25.3(5) Tension Cables
This section including title is revised to read:

> **8-25.3(5) Vacant**

Section 9-03, Aggregates
April 2, 2012

9-03.14(1) Gravel Borrow
Note [1] is deleted, including the reference in the table.

9-03.14(2) Select Borrow
Note [1] is deleted.

Note [2] is re-numbered Note [1], including the reference in the table.

9-03.14(4) Gravel Borrow for Geosynthetic Retaining Wall
This section is revised to read:

> All backfill material for geosynthetic retaining walls shall consist of granular material, either naturally occurring or processed, and shall be free draining, free from organic or otherwise deleterious material. The material shall be substantially free of shale or other soft, poor durability particles, and shall not contain recycled materials, such as glass, shredded tires, portland cement concrete rubble, or asphaltic concrete rubble. The backfill material shall meet the following requirements for grading and quality:

Sieve Size	Percent Passing
1 ¼ " [1]	99-100
1"	90-100

No. 4	50-80
No. 40	30 max.
No. 200	7.0 max.
Sand Equivalent	50 min.

All percentages are by weight

Property	Test Method	Allowable Test Value
Los Angeles Wear 500 rev.	AASHTO T 96	35 percent max.
Degration Factor	WSDOT Test Method 113	15 min.
pH, permanent walls	AASHTO T 289	4.5-9
pH, temporary walls	AASHTO T 289	3-10

Wall backfill material satisfying these grading and property requirements shall be classified as nonaggressive.

9-03.21(1) General Requirements
The first sentence in the first paragraph is revised to read:

Hot Mix Asphalt, Concrete Rubble, Recycled Glass (glass cullet), and Steel Furnace Slage may be used as, or blended uniformly with naturally occurring materials for aggregates.

9-03.21(1)C Vacant
This section including title is revised to read:

9-03.21(1)C Recycled Glass (Glass Cullet)
Glass Cullet shall meet the requirements of AASHTO M 318 with the additional requirement that the glass cullet is limited to the maximum amounts set in Section 9-03.21(1)E for recycled glass. Prior to use the Contractor shall provide certification to the Project Engineer that the recycled glass meets the physical properties and deleterious substances requirements in AASHTO M-318.

9-03.21(1) E Table on Maximum Allowable Percent (By Weight) of Recycled Material
The column heading "Recycled Glass" is revised to read "Recycled Glass (Glass Cullet) in the table.

In the column "Recycled Glass (Glass Cullet)" all amounts are revised to read "20" beginning with the item "Ballast" and continuing down until the last item in the table.

Section 9-04, Joint And Crack Sealing Materials
January 2, 2012

9-04.2 Joint Sealants
This section is supplemented with the following new sub-sections:

9-04.2(3) Polyurethane Sealant
Polyurethane sealant shall conform to ASTM C 920 Type S Grade NS Class 25 Use M.

Polyurethane sealant shall be compatible with the closed cell foam backer rod. When required, compatibility characteristics of sealants in contact with backer rods shall be determined by Test Method ASTM C 1087.

9-04.2(3)A Closed Cell Foam Backer Rod
Closed cell foam backer rod for use with polyurethane sealant shall conform to ASTM C 1330 Type C.

Section 9-06, Structural Steel and Related Materials
April 2, 2012

9-06.5(2) High Strength Bolts
In this section, "AASHTO M 291" is revised to read "ASTM A 563".

Section 9-10, Piling
April 2, 2012

9-10.4 Steel Pile Tips and Shoes
In the first paragraph "ASTMA A 148 Grade 60-90" is revised to read "ASTMA A 148 Grade 90-60".

Section 9-14, Erosion Control and Roadside Planting
April 2, 2012

9-14.3 Fertilizer
The second sentence in the first paragraph is revised to read:

It may be separate or in a mixture containing the percentage of total nitrogen, available phosphoric acid, and water-soluble potash or sulfur in the amounts specified.

9-14.4(2) Hydraulically Applied Erosion Control Products (HECPs)
The fourth row in Table 1 is revised to read:

Heavy Metals	EPA 6020A Total Metals	Antimony –	< 4 mg/kg
		Arsenic –	< 6 mg/kg
		Barium –	< 80 mg/kg
		Boron –	< 160 mg/kg
		Cadmium –	< 2 mg/kg

		Total Chromium – < 4 mg/kg Copper – < 10 mg/kg Lead – < 5 mg/kg Mercury – < 2 mg/kg Nickel – < 2 mg/kg Selenium – < 10 mg/kg Strontium – < 30 mg/kg Zinc – < 30 mg/kg

9-14.4(2)A Long Term Mulch
In the first paragraph, the phrase "within 2 hours of application" is deleted.

9-14.4(4) Wood Strand Mulch
The third paragraph is revised to read:

The Contractor shall provide Material Safety Data Sheet (MSDS) that demonstrates that the product is not harmful to plant life and a test report performed in accordance with WSDOT Test Method 125 demonstrating compliance to this specification prior to acceptance.

9-14.4(8) Compost
The second paragraph is revised to read:

Compost production and quality shall comply with WAC 173-350 and for biosolids composts, WAC 173-308.

The third paragraph is to read:

Compost products shall meet the following physical criteria:

1. Compost material shall be tested in accordance with U.S. Composting Council Testing Methods for the Examination of Compost and Composting (TMECC) 02.02-B, "Sample Sieving for Aggregate Size Classification".

Fine compost shall meet the following gradation:

Sieve Size	Percent Passing	
	Minimum	Maximum
1"	100	
5/8"	90	100
¼"	75	100

Note Maximum particle length of 4 inches.

Medium compost shall meet the following gradation:

Sieve Size	Percent Passing	
	Minimum	Maximum
1"	100	
5/8"	85	100
¼"	70	85

Note Maximum particle length of 4 inches. Medium compost shall have a carbon to nitrogen ration (C:N) between 18:1 and 35:1. The carbon to nitrogen ration shall be calculated using dry weight of "Organic Carbon" using TMECC 04.01A divided by the dry weight of "Total N" using TMECC 04.02D.

Coarse compost shall meet the following gradation:

Sieve Size	Percent Passing	
	Minimum	Maximum
2"	100	
1"	90	100
¾"	70	100
¼"	40	60

Note Maximum particle length of 6 inches. Coarse compost shall have a carbon to nitrogen ratio (C:N) between 25:1 and 35:1. The carbon to nitrogen ratio shall be calculated using the dry weight of "Organic Carbon" using TMECC 04.01A divided by the dry weight of "Total N" using TMECC 04.02D.

2. The pH shall be between 6.0 and 8.5 when tested in accordance with U.S. Composting Council TMECC 04.11-A, "1:5 Slurry pH".

3. Manufactured inert material (plastic, concrete, ceramics, metal, etc.) shall be less than 1 percent by weight as determined by U.S. Composting Council TMECC 03.08-A "Classification of Inerts by Sieve Size".

4. Minimum organic matter shall be 40 percent by dry weight basis as determined by U.S. Composting Council TMECC 05.07A "Loss-On-Ignition Organic Matter Method (LOI)".

5. Soluble salt contents shall be less than 4.0 mmhos/cm when tested in accordance with U.S. Composting Council TMECC 04.10 "Electrical Conductivity."

6. Maturity shall be greater than 80 percent in accordance with U.S. Composting Council TMECC 05.05-A, "Germination and Root Elongation".

7. Stability shall be 7-mg CO2–C/g OM/day or below in accordance with U.S. Composting Council TMECC 05.08-B "Carbon Dioxide Evolution Rate".

8. The compost product shall originate from organic waste as defined in WAC 173 350 as "Type 1 Feedstocks", "Type 2 Feedstocks", and/or "Type 3 Feedstocks". The Contractor shall provide a list of feedstock sources by percentage in the final compost product.

9. The Engineer may also evaluate compost for maturity using U.S. Composting Council TMECC 05.08-E "Solvita® Maturity Index". Fine compost shall score a number 6 or above on the Solvita® Compost Maturity Test. Medium and coarse compost shall score a 5 or above on the Solvita® Compost Maturity Test.

9-14.4(8)A Compost Approval
This section's title is revised to read:

9-14.4(8)A Compost Submittal Requirements

The first sentence in this section up until the colon is revised to read:

The Contractor shall submit the following information to the Engineer for approval:

Item No. 2 in the first paragraph is revised to read:

2. A copy of the Solid Waste Handling Permit issued to the manufacturer by the Jurisdictional Health Department in accordance with WAC 173-350 (Minimum Functional Standards for Solid Waste Handling) or for biosolid composts a copy of the Coverage Under the General Permit for Biosolids Management issued to the manufacturer by the Department of Ecology in accordance with WAC 173-308 (Biosolids Management).

9-14.5(2) Erosion Control Blanket
The second sentence in the first paragraph is revised to read:

The Contractor shall supply independent test results from the National Transportation Product Evaluation Program (NTPEP) meeting the following requirements in Tables 6 and 7:

9-14.5(4) Geotextile Encased Check Dam
This section including title is revised to read:

9-14.5(4) Check Dams
All materials used for check dams shall be non-toxic and not pose a threat to wildlife when installed.

This section is supplemented with the following new sub-sections:

9-14.5(4)A Biodegradable Check Dams
Biodegradable check dams shall meet the following requirements:

Biodegradable Check Dams	Materials
Wattle Check Dam	9-14.5(5)
Compost Sock Check Dam	9-14.5(6)
Coir Log Check Dam	9-14.5(7)

The Contractor may substitute a different biodegradable check dam as long as it complies with the following and is approved by the Engineer:

1. Made of natural plant fiber.

2. Netting if present shall be biodegradable.

9-14.5(4)B Non-biodegradable Check Dams
Non-biodegradable check dams shall meet the following requirements:

1. Geotextile materials shall conform to section 9-33 for silt fence.

2. Other such devices that fulfill the requirements of section 9-14.5(4) and shall be approved by the Engineer prior to installation.

9-14.6(1) Description
In item No. C in the fourth paragraph, "22-inch" is revised to read "2-inch".

Section 9-16, Fence and Guardrail
April 2, 2012

9-16.1(1)A Post Material for Chain Link Fence
The last sentence in the last paragraph is deleted.

9-16.1(1)C Tension Wire and Tension Cable
This section including title is revised to read:

9-16.1(1)C Tension Wire
Tension wire shall meet the requirements of AASHTO M 181. Tension wire galvanizing shall be Class 1.

9-16.1(1)D Fittings and Hardware
The last paragraph is deleted.

9-16.1(2) Approval
This section is deleted.

9-16.6(3) Posts
This section is revised to read:

Line posts for Types 1 and 2 glare screens shall be 2 inch inside diameter galvanized steel pipe with a nominal weight of 3.65 pounds per linear foot. End, corner, brace, and pull posts for Type 1 Design A and B and Type 2 shall be 2 ½ inch inside diameter galvanized steel pipe with a nominal weight of 5.79 pounds per linear foot. Intermediate pull posts (braced line posts) shall be as specified for line posts.

The base material for the manufacture of steel pipes used for posts shall conform to the requirements of ASTM A 53, except the weight tolerance on tubular posts shall be applied as provided below.

Posts provided for glare screen will have an acceptance tolerance on the weight per linear foot, as specified, equal to plus or minus 5 percent. This tolerance will apply to each individual post.

All posts shall be galvanized in accordance with AASHTO M 181 Section 32. The minimum average zinc coating is per square foot of surface area. This area is defined as the total area inside and outside. A sample for computing the average of mass of coating is defined as a 12-inch piece cut from each end of the galvanized member.

9-16.6(5) Cable
This section including title is revised to read:

9-16.6(5) Vacant

9-16.6(6) Cable and Tension Wire Attachments
This section including title is revised to read:

9-16.6(6) Tension Wire Attachments
All tension wire attachments shall be galvanized steel conforming to the requirements of AASHTO M 232 unless otherwise specified. Eye bolts shall have either a shoulder or a back-up nut on the eye end and be provided with an eye nut where needed or standard hex nut and lock washer ⅜-inch diameter for tension wire and of sufficient length to fasten to the type of posts used. Turnbuckles shall be of the shackle end type, ½ inch diameter, with standard take-up of 6 inches and provided with ⅜ inch diameter pins.

9-16.6(9) Fabric Bands and Stretcher Bars
The first paragraph is revised to read:

Fabric bands shall be ⅛ inch by 1inch nominal. Stretcher bars shall be $^{3}/_{16}$ inch by ¾ inch nominal or $^{5}/_{16}$ inch diameter round bar nominal. A $^{5}/_{16}$ inch diameter round stretcher bar shall be used with Type 1. Nominal shall be construed to be the area of the cross section of the shape obtained by multiplying the specified width by thickness. A variation of minus 5-percent from this theoretical area shall be construed as "nominal" size. All shall be galvanized to meet the requirements of ASTM F 626.

Section 9-20, Concrete Patching Material, Grout, and Mortar
January 2, 2012

9-20.3(3) Grout Type 3 for Unconfined Bearing Pad Applications
This section is revised to read:

> Grout Type 3 shall be a prepackaged material meeting the requirements of ASTM C 928 – Table 1, R2 Concrete or Mortar.

9-20.3(4) Grout Type 4 for Multipurpose Applications
In the third sentence of the first paragraph, the reference "0.40" is revised to read "0.45".

Section 9-23, Concrete Curing Materials and Admixtures
April 2, 2012

9-23.2 Liquid Membrane-Forming Concrete Curing Compounds
In the first paragraph, "moisture loss" is revised to read "water retention".

Section 9-29, Illumination, Signal, Electrical
April 2, 2012

9-29.10(2) Decorative Luminaries
The second sentence in the third paragraph is deleted.

9-29.25 Amplifier, Transformer, and Terminal Cabinets
In item No. 2.C., "Transformer 23.1 to 12.5 KVA" is revised to read "Transformer 3.1 to 12.5 KVA".

Section 9-34, Permanent Marking Material
April 2, 2012

9-34.2 Paint
The second paragraph is revised to read:

> Blue and black paint shall comply with the requirements for yellow paint in Section 9-34.2(4) and Section 9-34.2(5), with the exception that blue and black paints do not need to meet the requirements for titanium dioxide, directional reflectance, and contrast ration.

SPECIAL PROVISIONS TO THE STANDARD SPECIFICATIONS

(This Page Intentionally Left Blank

INTRODUCTION TO THE SPECIAL PROVISIONS

(July 31, 2007 APWA GSP)

The work on this project shall be accomplished in accordance with the *Standard Specifications for Road, Bridge and Municipal Construction*, 2012 edition, as issued by the Washington State Department of Transportation (WSDOT) and the American Public Works Association (APWA), Washington State Chapter (hereafter "Standard Specifications"). The Standard Specifications, as modified or supplemented by the Amendments to the Standard Specifications and these Special Provisions, all of which are made a part of the Contract Documents, shall govern all of the Work.

These Special Provisions are made up of both General Special Provisions (GSPs) from various sources, which may have project-specific fill-ins; and project-specific Special Provisions. Each Provision supplements, modifies, or replaces the comparable Standard Specification, or is a new Provision. The deletion, amendment, alteration, or addition to any subsection or portion of the Standard Specifications is meant to pertain only to that particular portion of the section, and in no way should it be interpreted that the balance of the section does not apply.

The project-specific Special Provisions are not labeled as such. The GSPs are labeled under the headers of each GSP, with the date of the GSP and its source, as follows:

(May 18, 2007 APWA GSP)
(August 7, 2006 WSDOT GSP)
(April 2, 2007 R&E GSP)
(NWR February 5, 2007)

Also incorporated into the Contract Documents by reference are:

- *Manual on Uniform Traffic Control Devices for Streets and Highways*, currently adopted edition, with Washington State modifications, if any
- *Standard Plans for Road, Bridge and Municipal Construction*, WSDOT/APWA, current edition
- *City of Ferndale Standard Plans*

Contractor shall obtain copies of these publications, at Contractor's own expense.

DIVISION 1
GENERAL REQUIREMENTS

DESCRIPTION OF WORK
(March 13, 1995 WSDOT GSP)

The project consists of improvements of approximately 3,200 lineal feet of Main Street, from Washington Street to Church Road. Work will include approximately 3,200 lineal feet of Main Street, from Douglas Road to Church Road. Work will include installation of 900 linear feet of sanitary sewer line; 5,000 linear feet of storm drain line; stormwater pond; and 800 linear feet of water main; installation of a 3 sided culvert; structural earth wall; removal of existing pavement, curbs and sidewalks; grading; placing gravel base and crushed surfacing; hot mix asphalt paving; installing curbs, gutters, and sidewalks; landscaping; and other work in accordance with the Contract Plans, Special Provisions, the Standard Specifications, including the amendments thereto, and Standard Plans.

1-01 DEFINITIONS AND TERMS

1-01.3 Definitions
(September 12, 2008 APWA GSP)

This Section is supplemented with the following:

All references in the Standard Specifications to the terms "State", "Department of Transportation", "Washington State Transportation Commission", "Commission", "Secretary of Transportation", "Secretary", "Headquarters", and "State Treasurer" shall be revised to read "Contracting Agency".

All references to "State Materials Laboratory" shall be revised to read "Contracting Agency designated location".

The venue of all causes of action arising from the advertisement, award, execution, and performance of the contract shall be in the Superior Court of the County where the Contracting Agency's headquarters are located.

Additive
A supplemental unit of work or group of bid items, identified separately in the proposal, which may, at the discretion of the Contracting Agency, be awarded in addition to the base bid.

Alternate
One of two or more units of work or groups of bid items, identified separately in the proposal, from which the Contracting Agency may make a choice between different methods or material of construction for performing the same work.

Contract Documents
See definition for "Contract".

Contract Time
The period of time established by the terms and conditions of the contract within which the work must be physically completed.

Dates

Bid Opening Date
The date on which the Contracting Agency publicly opens and reads the bids.

Award Date
The date of the formal decision of the Contracting Agency to accept the lowest responsible and responsive bidder for the work.

Contract Execution Date
The date the Contracting Agency officially binds the agency to the contract.

Notice to Proceed Date
The date stated in the Notice to Proceed on which the contract time begins.

Substantial Completion Date
The day the Engineer determines the Contracting Agency has full and unrestricted use and benefit of the facilities, both from the operational and safety standpoint, and only minor incidental work, replacement of temporary substitute facilities, or correction or repair remains for the physical completion of the total contract.

Physical Completion Date
The day all of the work is physically completed on the project. All documentation required by the contract and required by law does not necessarily need to be furnished by the Contractor by this date.

Completion Date
The day all the work specified in the contract is completed and all the obligations of the Contractor under the contract are fulfilled by the Contractor. All documentation required by the contract and required by law must be furnished by the Contractor before establishment of this date.

Final Acceptance Date
The date on which the Contracting Agency accepts the work as complete.

Notice of Award
The written notice from the Contracting Agency to the successful bidder signifying the Contracting Agency's acceptance of the bid.

Notice to Proceed
The written notice from the Contracting Agency or Engineer to the Contractor authorizing and directing the Contractor to proceed with the work and establishing the date on which the contract time begins.

Traffic
Both vehicular and non-vehicular traffic, such as pedestrians, bicyclists, wheelchairs, and equestrian traffic.

(December 29, 2008 R&E GSP)

Contracting Agency
The term "Contracting Agency" shall mean the "City of Ferndale", acting through its representatives and agents.

Department, Department of Transportation
The term "Department or Department of Transportation" when used in the Standard Specifications shall mean the "City of Ferndale."

Engineer
The Contracting Agency's representative, who administers the construction program for the Contracting Agency.

State
The term "State" when used in the Standard Specifications shall mean the "City of Ferndale."

Secretary or Engineer
The terms "Secretary" or "Engineer" when used in the Standard Specifications shall mean the City of Ferndale Attorney, Engineer or their designated representative.

1-02 BID PROCEDURES AND CONDITIONS

1-02.1 Prequalification of Bidders

Delete this Section and replace it with the following:

1-02.1 Qualifications of Bidder
(March 25, 2009 APWA GSP)

Bidders must meet the minimum qualifications of RCW 39.04.350(1), as amended:

"Before award of a public works contract, a bidder must meet the following responsibility criteria to be considered a responsible bidder and qualified to be awarded a public works project. The bidder must:

(a) At the time of bid submittal, have a certificate of registration in compliance with

chapter 18.27 RCW;

(b) Have a current state unified business identifier number;

(c) If applicable, have industrial insurance coverage for the bidder's employees working in Washington as required in Title 51 RCW; an employment security department number as required in Title 50 RCW; and a state excise tax registration number as required in Title 82 RCW; and

(d) Not be disqualified from bidding on any public works contract under RCW

1-02.2 Plans and Specifications

(October 1, 2005 APWA GSP)

Delete this section and replace it with the following:

Information as to where Bid Documents can be obtained or reviewed will be found in the Call for Bids (Advertisement for Bids) for the work.

After award of the contract, plans and specifications will be issued to the Contractor at no cost as detailed below:

To Prime Contractor	***No. of Sets***	***Basis of Distribution***
Reduced plans (11" x 17") and Contract Provisions	***3***	***Furnished automatically upon award.***
Large plans (e.g., 22" x 34") and Contract Provisions	***3***	***Furnished only upon request.***

Additional plans and Contract Provisions may be purchased by the Contractor by payment of the cost stated in the Call for Bids.

The Contracting Agency will place review copies of the plans and specifications on file in the Ferndale City Hall, 2095 Main Street, Ferndale, Washington

1-02.4(1) General

(March 17, 2010 R&E GSP)

Section 1-02.4(1) is supplemented with the following:

If the Bidder finds any discrepancy in, or omission from the specifications or plans, or if there is any doubt as to their meaning, the Bidder shall promptly notify Reichhardt & Ebe Engineering, Inc. (360) 354-3687. Any addenda issued during the time of bidding will be numbered consecutively and will be incorporated into these contract documents. The Bidder shall be responsible to ascertain, prior to submittal of a bid proposal that all addenda issued have been received, and are acknowledged on the "Bid Proposal Signature and Addendum Acknowledgment" form. Addendums will only be issued to those contractors appearing on the Plan Holders List at Reichhardt & Ebe Engineering, 423 Front Street, Lynden WA. It will be the responsibility of the contractor to ensure their name appears on the Plan Holders List.

Any interpretation or correction of the bid documents will be made only by addendum, and a copy of such addendum will be mailed or delivered to each person whose name appears on the Plan Holders List. The Contracting Agency will not be responsible for any other explanations or interpretations of the bid documents. No oral interpretations by the Contracting Agency of any provision in the bid documents will be considered binding.

Pre-Bid Conference

Due to the nature of the project, the Contracting Agency will hold one pre-bid conference for all proposal holders for this project. Subcontractors or other plan holders are encouraged to attend.

Those prospective bidders wanting to take part in the Pre-Bid Conference shall meet at the Ferndale City Hall, 2095 Main Street, Ferndale, Washington 98248. The meeting will start at **10:00 AM, April 16, 2012**. A jobsite visit may follow upon request. Attendance at this Pre-Bid Conference is not mandatory.

1-02.4(2) Subsurface Information

(March 13, 1995 WSDOT GSP)

Section 1-02.4(2), is supplemented with the following:

The soils information used for study and design of this project is attached as an appendix.

1-02.5 Proposal Forms

(June 27, 2011 APWA GSP)

Delete this section and replace it with the following:

The Proposal Form will identify the project and its location and describe the work. It will also list estimated quantities, units of measurement, the items of work, and the materials to be furnished at the unit bid prices. The bidder shall complete spaces on the proposal form that call for, but are not limited to, unit prices; extensions; summations; the total bid amount; signatures; date; and, where applicable, retail sales taxes and acknowledgment of addenda; the bidder's name, address, telephone number, and signature; the bidder's D/M/WBE commitment, if applicable; a State of Washington Contractor's Registration Number; and a Business License Number, if applicable. Bids shall be completed by typing or shall be printed in ink by hand, preferably in black ink. The required certifications are included as part of the Proposal Form.

The Contracting Agency reserves the right to arrange the proposal forms with alternates and additives, if to the advantage of the Contracting Agency. The bidder shall bid on all alternates and additives set forth in the Proposal Form unless otherwise specified.

1-02.6 Preparation of Proposal

(June 27, 2011 APWA GSP)

Supplement the second paragraph with the following:

4. If a minimum bid amount has been established for any item, the unit or lump sum price must equal or exceed the minimum amount stated.
5. Any correction to a bid made by interlineation, alteration, or erasure, shall be initialed by the signer of the bid.

Delete the last paragraph, and replace it with the following:

The Bidder shall make no stipulation on the Bid Form, nor qualify the bid in any manner.

A bid by a corporation shall be executed in the corporate name, by the president or a vice president (or other corporate officer accompanied by evidence of authority to sign).

A bid by a partnership shall be executed in the partnership name, and signed by a partner. A copy of the partnership agreement shall be submitted with the Bid Form if any D/M/WBE requirements are to be satisfied through such an agreement.

A bid by a joint venture shall be executed in the joint venture name and signed by a member of the joint venture. A copy of the joint venture agreement shall be submitted with the Bid Form if any D/W/MBE requirements are to be satisfied through such an agreement.

1-02.7 Bid Deposit

(October 1, 2005 APWA GSP)

Supplement this section with the following:

Bid bonds shall contain the following:

1. Contracting Agency-assigned number for the project;
2. Name of the project;
3. The Contracting Agency named as obligee;
4. The amount of the bid bond stated either as a dollar figure or as a percentage which represents five percent of the maximum bid amount that could be awarded;
5. Signature of the bidder's officer empowered to sign official statements. The signature of the person authorized to submit the bid should agree with the signature on the bond, and the title of the person must accompany the said signature;
6. The signature of the surety's officer empowered to sign the bond and the power of attorney.

If so stated in the Contract Provisions, bidder must use the bond form included in the Contract Provisions.

(February 1, 2008, R&E GSP)

Section 1-02.7 is supplemented with the following:

All bid bonds shall be made payable to the City of Ferndale.

1-02.9 Delivery of Proposal
(January 24, 2011 APWA GSP)

Delete this section and replace it with the following:

Each proposal shall be submitted in a sealed envelope, with the Project Name and Project Number as stated in the Advertisement for Bids clearly marked on the outside of the envelope, or as otherwise required in the Bid Documents, to ensure proper handling and delivery.

The Contracting Agency will not consider Proposals it receives after the time fixed for opening Bids in the call for Bids.

(May 14, 2008)
Public Opening Of Proposal
Section 1-02.12 is supplemented with the following:

Date Of Opening Bids
Sealed bids are to be received at the following location prior to the time Specified:

1. At City of Ferndale Public Works Department, Ferndale City Hall, 2095 Main Street. Ferndale, Washington 98248.

The bid opening date for this project is April 24, 2012. Bids received will be publicly opened and read after 10:00 A.M. on this date.

(February 1, 2008 R&E GSP)

All bid envelopes must be in an opaque envelope and plainly marked on the outside:

Proposal for Contract
(Name of Bidder)
Project: **Main Street Improvements (Douglas to Church)**
Ferndale, WA

Bid proposals shall be deposited at the designated location prior to the date and time for receipt of bid proposals as indicated in the "Invitation to Bid", or such revised date as may be specified by an addendum.

No oral, telephonic or telegraphic bids or modifications will be considered.

1-02.13 Irregular Proposals
(March 25, 2009 APWA GSP)

Revise item 1 to read:

1. A proposal will be considered irregular and will be rejected if:

a. The Bidder is not prequalified when so required;
b. The authorized proposal form furnished by the Contracting Agency is not used or is altered;
c. The completed proposal form contains any unauthorized additions, deletions, alternate Bids, or conditions;
d. The Bidder adds provisions reserving the right to reject or accept the award, or enter into the Contract
e. A price per unit cannot be determined from the Bid Proposal;
f. The Proposal form is not properly executed;
g. The Bidder fails to submit or properly complete a Subcontractor list, if applicable, as required in Section 1-02.6;
h. The Bidder fails to submit or properly complete a Disadvantaged, Minority or Women's Business Enterprise Certification, if applicable, as required in Section 1-02.6;
i. The Bid Proposal does not constitute a definite and unqualified offer to meet the material terms of the Bid invitation; or
j. More than one proposal is submitted for the same project from a Bidder under the same or different names.

(December 29, 2008 R&E GSP)
Item 1a is supplemented with the following:

"Bidders do not have to be pre-qualified."

1-02.14 Disqualification of Bidders
(March 25, 2009 APWA GSP, Option B)

Delete this Section and replace it with the following:

A Bidder will be deemed not responsible if:

1. the Bidder does not meet the mandatory bidder responsibility criteria in RCW 39.04.350(1), as amended; or
2. evidence of collusion exists with any other Bidder or potential Bidder. Participants in collusion will be restricted from submitting further bids; or
3. the Bidder, in the opinion of the Contracting Agency, is not qualified for the work or to the full extent of the bid, or to the extent that the bid exceeds the authorized prequalification amount as may have been determined by a prequalification of the Bidder; or
4. an unsatisfactory performance record exists based on past or current Contracting Agency work or for work done for others, as judged from the standpoint of conduct of the work; workmanship; or progress; affirmative action; equal employment opportunity practices; termination for cause; or Disadvantaged Business Enterprise, Minority Business Enterprise, or Women's Business Enterprise utilization; or
5. there is uncompleted work (Contracting Agency or otherwise), which in the opinion of the Contracting Agency might hinder or prevent the prompt

completion of the work bid upon; or

6. the Bidder failed to settle bills for labor or materials on past or current contracts, unless there are extenuating circumstances acceptable to the Contracting Agency; or
7. the Bidder has failed to complete a written public contract or has been convicted of a crime arising from a previous public contract, unless there are extenuating circumstances acceptable to the Contracting Agency; or
8. the Bidder is unable, financially or otherwise, to perform the work, in the opinion of the Contracting Agency; or
9. there are any other reasons deemed proper by the Contracting Agency.

As evidence that the Bidder meets the bidder responsibility criteria above, the apparent two lowest Bidders must submit to the Contracting Agency within 24 hours of the bid submittal deadline, documentation (sufficient in the sole judgment of the Contracting Agency) demonstrating compliance with all applicable responsibility criteria, including all documentation specifically listed in the supplemental criteria. The Contracting Agency reserves the right to request such documentation from other Bidders as well, and to request further documentation as needed to assess bidder responsibility.

The basis for evaluation of Bidder compliance with these supplemental criteria shall be any documents or facts obtained by Contracting Agency (whether from the Bidder or third parties) which any reasonable owner would rely on for determining such compliance, including but not limited to: (i) financial, historical, or operational data from the Bidder; (ii) information obtained directly by the Contracting Agency from owners for whom the Bidder has worked, or other public agencies or private enterprises; and (iii) any additional information obtained by the Contracting Agency which is believed to be relevant to the matter.

If the Contracting Agency determines the Bidder does not meet the bidder responsibility criteria above and is therefore not a responsible Bidder, the Contracting Agency shall notify the Bidder in writing, with the reasons for its determination. If the Bidder disagrees with this determination, it may appeal the determination within 24 hours of receipt of the Contracting Agency's determination by presenting its appeal to the Contracting Agency. The Contracting Agency will consider the appeal before issuing its final determination. If the final determination affirms that the Bidder is not responsible, the Contracting Agency will not execute a contract with any other Bidder until at least two business days after the Bidder determined to be not responsible has received the final determination.

1-02.15 Pre Award Information

(October 1, 2005 APWA GSP)

Revise this section to read:

Before awarding any contract, the Contracting Agency may require one or more of these items or actions of the apparent lowest responsible bidder:

1. A complete statement of the origin, composition, and manufacture of any or all

materials to be used,

2. Samples of these materials for quality and fitness tests,
3. A progress schedule (in a form the Contracting Agency requires) showing the order of and time required for the various phases of the work,
4. A breakdown of costs assigned to any bid item,
5. Attendance at a conference with the Engineer or representatives of the Engineer,
6. Obtain, and furnish a copy of, a business license to do business in the city or county where the work is located.
7. A copy of State of Washington Contractor's Registration, or
8. Any other information or action taken that is deemed necessary to ensure that the bidder is the lowest responsible bidder.

(December 29, 2008 R&E GSP)
Section 1-02.15 is supplemented with the following:

9. Evidence of financial resources and experience,
10. Organization and equipment the Bidder has available for the performance of the contract by the Bidder and each proposed subcontractor.

1-03 AWARD AND EXECUTION OF CONTRACT

1-03.1 Consideration of Bids

(January 23, 2006 APWA GSP)

Revise the first paragraph to read:

After opening and reading proposals, the Contracting Agency will check them for correctness of extensions of the prices per unit and the total price. If a discrepancy exists between the price per unit and the extended amount of any bid item, the price per unit will control. If a minimum bid amount has been established for any item and the bidder's unit or lump sum price is less than the minimum specified amount, the Contracting Agency will unilaterally revise the unit or lump sum price, to the minimum specified amount and recalculate the extension. The total of extensions, corrected where necessary, including sales taxes where applicable and such additives and/or alternates as selected by the Contracting Agency, will be used by the Contracting Agency for award purposes and to fix the Awarded Contract Price amount and the amount of the contract bond.

1-03.3 Execution of Contract

(October 1, 2005 APWA GSP)

Revise this section to read:

Copies of the Contract Provisions, including the unsigned Form of Contract, will be available for signature by the successful bidder on the first business day following award. The number of copies to be executed by the Contractor will be determined by the Contracting Agency.

Within 10 calendar days after the award date, the successful bidder shall return the signed Contracting Agency-prepared contract, an insurance certification as required by Section 1-07.18, and a satisfactory bond as required by law and Section 1-03.4. Before execution of the contract by the Contracting Agency, the successful bidder shall provide any pre-award information the Contracting Agency may require under Section 1-02.15.

Until the Contracting Agency executes a contract, no proposal shall bind the Contracting Agency nor shall any work begin within the project limits or within Contracting Agency-furnished sites. The Contractor shall bear all risks for any work begun outside such areas and for any materials ordered before the contract is executed by the Contracting Agency.

If the bidder experiences circumstances beyond their control that prevents return of the contract documents within the calendar days after the award date stated above, the Contracting Agency may grant up to a maximum of 10 additional calendar days for return of the documents, provided the Contracting Agency deems the circumstances warrant it.

1-03.4 Contract Bond

(December 29, 2008 R&E GSP)

Section 1-03.4 is supplemented with the following:

In addition to securing the faithful performance of all the Contractor's obligations under the Contract, the Contract bond shall specifically remain in force for a period of one (1) year after the acceptance of the project by the Contracting Agency. This one (1) year Contract bond extension shall be for any defect or defects in any of the workmanship entering into any part of the Work or designated equipment covered by the Contract.

Payment

Payment shall only be for the cost to extend the Contract bond one (1) year past the final acceptance of the project by the Contracting Agency. Payment will be made in accordance with Section 1-04.1 for the following Bid item when included in the Proposal:

"Contract Bond Extension", lump sum.

1-03.4 Contract Bond

(October 1, 2005 APWA GSP)

Revise the first paragraph to read:

The successful bidder shall provide an executed contract bond for the full contract amount. This contract bond shall:

1. Be on a Contracting Agency-furnished form;
2. Be signed by an approved surety (or sureties) that:
   a. Is registered with the Washington State Insurance Commissioner, and
   b. Appears on the current Authorized Insurance List in the State of Washington published by the Office of the Insurance Commissioner,
3. Be conditioned upon the faithful performance of the contract by the Contractor within the

prescribed time;

4. Guarantee that the surety shall indemnify, defend, and protect the Contracting Agency against any claim of direct or indirect loss resulting from the failure:
   a. Of the Contractor (or any of the employees, subcontractors, or lower tier subcontractors of the Contractor) to faithfully perform the contract, or
   b. Of the Contractor (or the subcontractors or lower tier subcontractors of the Contractor) to pay all laborers, mechanics, subcontractors, lower tier subcontractors, material person, or any other person who provides supplies or provisions for carrying out the work;
5. Be accompanied by a power of attorney for the Surety's officer empowered to sign the bond; and
6. Be signed by an officer of the Contractor empowered to sign official statements (sole proprietor or partner). If the Contractor is a corporation, the bond must be signed by the president or vice-president, unless accompanied by written proof of the authority of the individual signing the bond to bind the corporation (i.e., corporate resolution, power of attorney or a letter to such effect by the president or vice-president).

1-04 SCOPE OF THE WORK

1-04.2 Coordination of Contract Documents, Plans, Special Provisions, Specifications, and Addenda

(October 1, 2005 APWA GSP)

Revise the second paragraph to read:

Any inconsistency in the parts of the contract shall be resolved by following this order of precedence (e.g., 1 presiding over 2, 2 over 3, 3 over 4, and so forth):

1. Addenda,
2. Proposal Form,
3. Special Provisions, including APWA General Special Provisions, if they are included,
4. Contract Plans,
5. Amendments to the Standard Specifications,
6. WSDOT Standard Specifications for Road, Bridge and Municipal Construction,
7. Contracting Agency's Standard Plans (if any), and
8. WSDOT Standard Plans for Road, Bridge, and Municipal Construction.

1-05 CONTROL OF WORK

1-05.4 Conformity with and Deviations from Plans and Stakes

(March 30, 2007 R&E GSP)

Section 1-05.4 is supplemented with the following:

Survey stakes will be provided by the Contracting Agency in accordance with this Section, as supplemented by the following:

1. Clearing stakes (no vertical control) will be placed at the approximate limits of

clearing prior to the Contractor's clearing and grubbing operations.

2. Cut/fill stakes will be placed after completion of clearing and grubbing. The Contractor shall designate a qualified supervising grade checker for the project. This grade checker shall meet with the Engineer prior to the beginning of grading operations in order to develop a mutually agreeable staking and notation system for the project.

3. Offset stakes and grade hubs will be provided for enclosed drain lines, sanitary sewer mains, water mains, manhole structures and fire hydrants, according to the system agreed on by the grade checker Engineer.

4. The Engineer will not provide grade hubs within the traveled way on any section of road concurrent with the Contractor's hauling operations on that particular section of road.

5. Grade hubs will be provided only for the top of the ballast course. In order to eliminate unnecessary destruction of grade hubs, these hubs will not be placed within the traveled way until grading has been completed to plus or minus 0.05 feet, based on cut stake information, and until the roadway where the hubs are to be placed has been compacted to the satisfaction of the Engineer.

6. Staking for curb and gutter will be set on intervals of 25 feet. Curb and gutter grades must conform to within plus or minus 0.02 feet of elevations shown on the Project Plans. Deviation from this specification will be cause for rejection of non-conforming work. Asphalt finish graded must conform to within plus or minus 0.03 feet of elevations shown on the Project Plans.

7. Any additional survey stakes not specified herein or any replacement of survey stakes provided, will be accomplished by the Engineer at the Contractor's expense. The City of Ferndale may require payment from the Contractor for such additional or redundant surveying in an amount not to exceed the labor and equipment costs directly assignable to the additional work. Such costs may be deducted from payments due the Contractor in accordance with the provisions of Section 1-05.4.

8. Any claim by the Contractor for extra compensation by reason of alterations or reconstruction work allegedly due to error in the Engineer's line and grade will not be considered unless the original control points set by the Engineer still exist.

1-05.7 Removal of Defective and Unauthorized Work

(October 1, 2005 APWA GSP)

Supplement this section with the following:

If the Contractor fails to remedy defective or unauthorized work within the time specified in a written notice from the Engineer, or fails to perform any part of the work required by the Contract Documents, the Engineer may correct and remedy such work as may be identified in the written notice, with Contracting Agency forces or by such other means as the Contracting Agency may deem necessary.

If the Contractor fails to comply with a written order to remedy what the Engineer determines to be an emergency situation, the Engineer may have the defective and unauthorized work corrected immediately, have the rejected work removed and replaced, or have work the Contractor refuses to perform completed by using Contracting Agency or other forces. An emergency situation is any situation when, in the opinion of the Engineer, a delay in its remedy could be potentially unsafe, or might cause serious risk of loss or damage to the public.

Direct or indirect costs incurred by the Contracting Agency attributable to correcting and remedying defective or unauthorized work, or work the Contractor failed or refused to perform, shall be paid by the Contractor. Payment will be deducted by the Engineer from monies due, or to become due, the Contractor. Such direct and indirect costs shall include in particular, but without limitation, compensation for additional professional services required, and costs for repair and replacement of work of others destroyed or damaged by correction, removal, or replacement of the Contractor's unauthorized work.

No adjustment in contract time or compensation will be allowed because of the delay in the performance of the work attributable to the exercise of the Contracting Agency's rights provided by this Section.

The rights exercised under the provisions of this section shall not diminish the Contracting Agency's right to pursue any other avenue for additional remedy or damages with respect to the Contractor's failure to perform the work as required.

1-05.11 Final Inspection

Delete this section and replace it with the following:

1-05.11 Final Inspections and Operational Testing

(October 1, 2005 APWA GSP)

1-05.11(1) Substantial Completion Date

When the Contractor considers the work to be substantially complete, the Contractor shall so notify the Engineer and request the Engineer establish the Substantial Completion Date. The Contractor's request shall list the specific items of work that remain to be completed in order to reach physical completion. The Engineer will schedule an inspection of the work with the Contractor to determine the status of completion. The Engineer may also establish the Substantial Completion Date unilaterally.

If, after this inspection, the Engineer concurs with the Contractor that the work is substantially complete and ready for its intended use, the Engineer, by written notice to the Contractor, will set the Substantial Completion Date. If, after this inspection the Engineer does not consider the work substantially complete and ready for its intended use, the Engineer will, by written notice, so notify the Contractor giving the reasons therefor.

Upon receipt of written notice concurring in or denying substantial completion, whichever is applicable, the Contractor shall pursue vigorously, diligently and without unauthorized interruption, the work necessary to reach Substantial and Physical Completion. The Contractor shall provide the Engineer with a revised schedule indicating when the Contractor expects to reach substantial and physical completion of the work.

The above process shall be repeated until the Engineer establishes the Substantial Completion Date and the Contractor considers the work physically complete and ready for final inspection.

1-05.11(2) Final Inspection and Physical Completion Date

When the Contractor considers the work physically complete and ready for final inspection, the Contractor by written notice, shall request the Engineer to schedule a final inspection. The Engineer will set a date for final inspection. The Engineer and the Contractor will then make a final inspection and the Engineer will notify the Contractor in writing of all particulars in which the final inspection reveals the work incomplete or unacceptable. The Contractor shall immediately take such corrective measures as are necessary to remedy the listed deficiencies. Corrective work shall be pursued vigorously, diligently, and without interruption until physical completion of the listed deficiencies. This process will continue until the Engineer is satisfied the listed deficiencies have been corrected.

If action to correct the listed deficiencies is not initiated within 7 days after receipt of the written notice listing the deficiencies, the Engineer may, upon written notice to the Contractor, take whatever steps are necessary to correct those deficiencies pursuant to Section 1-05.7.
The Contractor will not be allowed an extension of contract time because of a delay in the performance of the work attributable to the exercise of the Engineer's right hereunder.

Upon correction of all deficiencies, the Engineer will notify the Contractor and the Contracting Agency, in writing, of the date upon which the work was considered physically complete. That date shall constitute the Physical Completion Date of the contract, but shall not imply acceptance of the work or that all the obligations of the Contractor under the contract have been fulfilled.

1-05.11(3) Operational Testing

It is the intent of the Contracting Agency to have at the Physical Completion Date a complete and operable system. Therefore when the work involves the installation of machinery or other mechanical equipment; street lighting, electrical distribution or signal systems;

irrigation systems; buildings; or other similar work it may be desirable for the Engineer to have the Contractor operate and test the work for a period of time after final inspection but prior to the physical completion date. Whenever items of work are listed in the Contract Provisions for operational testing they shall be fully tested under operating conditions for the time period specified to ensure their acceptability prior to the Physical Completion Date. During and following the test period, the Contractor shall correct any items of workmanship, materials, or equipment which prove faulty, or that are not in first class operating condition. Equipment, electrical controls, meters, or other devices and equipment to be tested during this period shall be tested under the observation of the Engineer, so that the Engineer may determine their suitability for the purpose for which they were installed. The Physical Completion Date cannot be established until testing and corrections have been completed to the satisfaction of the Engineer.

The costs for power, gas, labor, material, supplies, and everything else needed to successfully complete operational testing, shall be included in the unit contract prices related to the system being tested, unless specifically set forth otherwise in the proposal.

Operational and test periods, when required by the Engineer, shall not affect a manufacturer's guaranties or warranties furnished under the terms of the contract.

1-05.13 Superintendents, Labor and Equipment of Contractor
(March 25, 2009 APWA GSP)

Revise the seventh paragraph to read:

Whenever the Contracting Agency evaluates the Contractor's qualifications pursuant to Section 1-02.14, it will take these performance reports into account.

1-05.14 Cooperation with Other Contractors
(March 13, 1995 WSDOT GSP)

Section 1-05.14 is supplemented with the following:

Other Contracts or Other Work
It is anticipated that the following work adjacent to or within the limits of this project will be performed by others during the course of this project and will require coordination of the work:

Police Station Conversion/Remodel Project: Construction Work for Converting the Existing Library to a Police Station
Project Limits: Existing Library located at the northwest corner of Main and Washington. The proposed project improvements will be in the area surrounding the **Police Station Conversion/Remodel Project.** It is anticipated that the City hired contractor will be working within the project limits during the construction of City's Police Station Conversion/Remodel Project. The contractor's work will generally consist of, but is not limited to, excavation, backfilling, grading, and paving.

Puget Sound Energy (Power): Utility Construction

Project Limits: Beginning of Project to the End of Project
Relocating and adjusting their facilities to accommodate project improvement. Existing power poles will be impacted as a result of the Contractor's work.

Frontier Communications (Communications): Utility Construction
Project Limits: Beginning of Project to the End of Project
Relocating and adjusting their facilities to accommodate project improvement. Existing power poles will be impacted as a result of the Contractor's work.

Comcast (Communications): Utility Construction
Project Limits: Beginning of Project to the End of Project
Relocating and adjusting their facilities to accommodate project improvement. Existing power poles will be impacted as a result of the Contractor's work.

Black Rock Cable (Communications): Utility Construction
Project Limits: Beginning of Project to the End of Project
Relocating and adjusting their facilities to accommodate project improvement. Existing power poles will be impacted as a result of the Contractor's work.

Cascade Natural Gas (Gas): Utility Construction
Project Limits: Beginning of Project to the End of Project
Relocating and adjusting their facilities to accommodate project improvements. Cascade lines will be impacted as a result of the Contractor's work.

1-05.15 Method of Serving Notices
(March 25, 2009 APWA GSP)
Revise the second paragraph to read:

All correspondence from the Contractor shall be directed to the Project Engineer. <u>All correspondence from the Contractor constituting any notification, notice of protest, notice of dispute, or other correspondence constituting notification required to be furnished under the Contract, must be in paper format, hand delivered or sent via mail delivery service to the Project Engineer's office. Electronic copies such as e-mails or electronically delivered copies of correspondence will not constitute such notice and will not comply with the requirements of the Contract.</u>

Add the following new section:

1-05.16 Water and Power
(October 1, 2005 APWA GSP)

The Contractor shall make necessary arrangements, and shall bear the costs for power and water necessary for the performance of the work, unless the contract includes power and water as a pay item.

Add the following new section:

1-05.17 Oral Agreements
(October 1, 2005 AWPA GSP)

No oral agreement or conversation with any officer, agent, or employee of the Contracting Agency, either before or after execution of the contract, shall affect or modify any of the terms or obligations contained in any of the documents comprising the contract. Such oral agreement or conversation shall be considered as unofficial information and in no way binding upon the Contracting Agency, unless subsequently put in writing and signed by the Contracting Agency.

1-06 CONTROL OF MATERIALS

1-06.4 Handling and Storing Materials
(February 1, 2008 R&E GSP)

Section 1-06.4 is supplemented with the following:

The Contractor shall make arrangements for storage of equipment and materials.

Section 1-06.4 is supplemented with the following:

No staging area is provided by the Contracting Agency.

1-07 LEGAL RELATIONS AND RESPONSIBILITIES TO THE PUBLIC

1-07.1 Laws to Be Observed
(October 1, 2005 APWA GSP)

Supplement this section with the following:

In cases of conflict between different safety regulations, the more stringent regulation shall apply.

The Washington State Department of Labor and Industries shall be the sole and paramount administrative agency responsible for the administration of the provisions of the Washington Industrial Safety and Health Act of 1973 (WISHA).

The Contractor shall maintain at the project site office, or other well known place at the project site, all articles necessary for providing first aid to the injured. The Contractor shall establish, publish, and make known to all employees, procedures for ensuring immediate removal to a hospital, or doctor's care, persons, including employees, who may have been injured on the project site. Employees should not be permitted to work on the project site before the Contractor has established and made known procedures for removal of injured persons to a hospital or a doctor's care.

The Contractor shall have sole responsibility for the safety, efficiency, and adequacy of the Contractor's plant, appliances, and methods, and for any damage or injury resulting from their failure, or improper maintenance, use, or operation. The Contractor shall be solely and completely responsible for the conditions of the project site, including safety for all persons and property in the performance of the work. This requirement shall apply continuously, and not be limited to normal working hours. The required or implied duty of the Engineer to conduct construction review of the Contractor's performance does not, and shall not, be intended to include review and adequacy of the Contractor's safety measures in, on, or near the project site.

1-07.2 State Taxes

Delete this section, including its sub-sections, in its entirety and replace it with the following:

1-07.2 State Sales Tax
(June 27, 2011 APWA GSP)

The Washington State Department of Revenue has issued special rules on the State sales tax. Sections 1-07.2(1) through 1-07.2(3) are meant to clarify those rules. The Contractor should contact the Washington State Department of Revenue for answers to questions in this area. The Contracting Agency will not adjust its payment if the Contractor bases a bid on a misunderstood tax liability.

The Contractor shall include all Contractor-paid taxes in the unit bid prices or other contract amounts. In some cases, however, state retail sales tax will not be included. Section 1-07.2(2) describes this exception.

The Contracting Agency will pay the retained percentage (or release the Contract Bond if a FHWA-funded Project) only if the Contractor has obtained from the Washington State Department of Revenue a certificate showing that all contract-related taxes have been paid (RCW 60.28.051). The Contracting Agency may deduct from its payments to the Contractor any amount the Contractor may owe the Washington State Department of Revenue, whether the amount owed relates to this contract or not. Any amount so deducted will be paid into the proper State fund.

1-07.2(1) State Sales Tax — Rule 171

WAC 458-20-171, and its related rules, apply to building, repairing, or improving streets, roads, etc., which are owned by a municipal corporation, or political subdivision of the state, or by the United States, and which are used primarily for foot or vehicular traffic. This includes storm or combined sewer systems within and included as a part of the street or road drainage system and power lines when such are part of the roadway lighting system. For work performed in such cases, the Contractor shall include Washington State Retail Sales Taxes in the various unit bid item prices, or other contract amounts, including those that the Contractor pays on the purchase of the materials, equipment, or supplies used or consumed in doing the work.

1-07.2(2) State Sales Tax — Rule 170

WAC 458-20-170, and its related rules, apply to the constructing and repairing of new or existing buildings, or other structures, upon real property. This includes, but is not limited to, the construction of streets, roads, highways, etc., owned by the state of Washington; water mains and their appurtenances; sanitary sewers and sewage disposal systems unless such sewers and disposal systems are within, and a part of, a street or road drainage system; telephone, telegraph, electrical power distribution lines, or other conduits or lines in or above streets or roads, unless such power lines become a part of a street or road lighting system; and installing or attaching of any article of tangible personal property in or to real property, whether or not such personal property becomes a part of the realty by virtue of installation.

For work performed in such cases, the Contractor shall collect from the Contracting Agency, retail sales tax on the full contract price. The Contracting Agency will automatically add this sales tax to each payment to the Contractor. For this reason, the Contractor shall not include the retail sales tax in the unit bid item prices, or in any other contract amount subject to Rule 170, with the following exception.

Exception: The Contracting Agency will not add in sales tax for a payment the Contractor or a subcontractor makes on the purchase or rental of tools, machinery, equipment, or consumable supplies not integrated into the project. Such sales taxes shall be included in the unit bid item prices or in any other contract amount.

1-07.2(3) Services

The Contractor shall not collect retail sales tax from the Contracting Agency on any contract wholly for professional or other services (as defined in Washington State Department of Revenue Rules 138 and 244).

1-07.6 Permits and Licenses

(March 13, 1995 WSDOT GSP)

Section 1-07.6 is supplemented with the following:

No hydraulic permits are required for this project unless the Contractor's operations use, divert, obstruct, or change the natural flow or bed of any river or stream, or utilize any of the waters of the State or materials from gravel or sand bars, or from stream beds.

Department of Ecology Permits For Construction
(February 1, 2008 R&E GSP)
The Contractor shall transfer the NPDES Construction Stormwater General Permit issued for this project to the Contractor's name. The transfer will be a "Complete Transfer". Prior to the Contractor beginning any work at the site, the Contractor shall provide the Engineer with documents showing that the "Complete Transfer" has been approved.

All costs involved with the satisfying the NPDES Construction Stormwater General Permit requirements shall be incidental to the various bid items.

1-07.7 Load Limits
(March 13, 1995 WSDOT GSP)

Section 1-07.7 is supplemented with the following:

If the sources of materials provided by the Contractor necessitates hauling over roads other than State Highways, the Contractor shall, at the Contractor's expense, make all arrangements for the use of the haul routes.

1-07.13 Contractor's Responsibility for Work

1-07.13(4) Repair of Damage
(August 6, 2001 WSDOT GSP)

Section 1-07.13(4) is revised to read:

The Contractor shall promptly repair all damage to either temporary or permanent work as directed by the Engineer. For damage qualifying for relief under Sections 1-07.13(1), 1-07.13(2) or 1-07.13(3), payment will be made in accordance with Section 1-04.4. Payment will be limited to repair of damaged work only. No payment will be made for delay or disruption of work.

1-07.15 Temporary Water Pollution/Erosion Control
(February 1, 2008 R&E GSP)

Section 1-07.15 is supplemented with the following:

Erosion Control shall include but not be limited to preventing storm water which has come in contact with disturbed or excavated areas from entering the storm drainage system. The contractor will not allow flow from existing ditches or ground water to come in contact with disturbed or excavated areas. The contractor shall be required to take any means necessary to prevent, control and stop water pollution or erosion within the project as shown on the Plans.

1-07.17 Utilities and Similar Facilities

(April 2, 2007 WSDOT GSP)

Section 1-07.17 is supplemented with the following:

Locations and dimensions shown in the Plans for existing facilities are in accordance with available information obtained without uncovering, measuring, or other verification.

The following addresses and telephone numbers of utility companies known or suspected of having facilities within the project limits are supplied for the Contractor's convenience:

Puget Sound Energy, 1329 State Street, Bellingham, WA 98225
Teresa Loop, 360-647-6525
Frontier Communications, 595 Pease Road, Burlington, WA 98233
Chris Tuttle, (360) 757-2119

Comcast Cable, 400 Sequoia Drive, Bellingham, WA 98226
Bill Inama 360 527-8241

Cascade Natural Gas, 1910 Racine Street, Bellingham, WA 98229
Gordon Van Corbach, 360-733-5986

Black Rock Cable, Inc., 3229 Northshore Rd., Bellingham, WA 98226
Randy Wilson, (360) 734-7930

City of Ferndale Public Works, 2095 Main Street, Ferndale, WA 98248
Bo Westford, 360-384-4006

1-07.18 Public Liability and Property Damage Insurance

Delete this section in its entirety, and replace it with the following:

1-07.18 Insurance

(January 24, 2011 APWA GSP)

1-07.18(1) General Requirements

A. The Contractor shall obtain the insurance described in this section from insurers approved by the State Insurance Commissioner pursuant to RCW Title 48. The insurance must be provided by an insurer with a rating of A-: VII or higher in the A.M. Best's Key Rating Guide, which is licensed to do business in the state of Washington (or issued as a surplus line by a Washington Surplus lines broker). The Contracting Agency reserves the right to approve or reject the insurance provided, based on the insurer (including financial condition), terms and coverage, the Certificate of Insurance, and/or endorsements.

B. The Contractor shall keep this insurance in force during the term of the contract and for thirty (30) days after the Physical Completion date, unless otherwise indicated (see C. below).

C. If any insurance policy is written on a claims made form, its retroactive date, and that of all subsequent renewals, shall be no later than the effective date of this Contract. The policy shall state that coverage is claims made, and state the retroactive date. Claims-made form coverage shall be maintained by the Contractor for a minimum of 36 months following the Final Completion or earlier termination of this contract, and the Contractor shall annually provide the Contracting Agency with proof of renewal. If renewal of the claims made form of coverage becomes unavailable, or economically prohibitive, the Contractor shall purchase an extended reporting period ("tail") or execute another form of guarantee acceptable to the Contracting Agency to assure financial responsibility for liability for services performed.

D. The insurance policies shall contain a "cross liability" provision.

E. The Contractor's and all subcontractors' insurance coverage shall be primary and non-contributory insurance as respects the Contracting Agency's insurance, self-insurance, or insurance pool coverage.

F. The Contractor shall provide the Contracting Agency and all Additional Insureds with written notice of any policy cancellation, within two business days of their receipt of such notice.

G. Upon request, the Contractor shall forward to the Contracting Agency a full and certified copy of the insurance policy(s).

H. The Contractor shall not begin work under the contract until the required insurance has been obtained and approved by the Contracting Agency.

I. Failure on the part of the Contractor to maintain the insurance as required shall constitute a material breach of contract, upon which the Contracting Agency may, after giving five business days notice to the Contractor to correct the breach, immediately terminate the contract or, at its discretion, procure or renew such insurance and pay any and all premiums in connection therewith, with any sums so expended to be repaid to the Contracting Agency on demand, or at the sole discretion of the Contracting Agency, offset against funds due the Contractor from the Contracting Agency.

J. All costs for insurance shall be incidental to and included in the unit or lump sum prices of the contract and no additional payment will be made.

1-07.18(2) Additional Insured

All insurance policies, with the exception of Professional Liability and Workers Compensation, shall name the following listed entities as additional insured(s):

- the Contracting Agency and its officers, elected officials, employees, agents, and volunteers

The above-listed entities shall be additional insured(s) for the full available limits of liability maintained by the Contractor, whether primary, excess, contingent or otherwise, irrespective of whether such limits maintained by the Contractor are greater than those required by this Contract, and irrespective of whether the Certificate of Insurance provided by the Contractor pursuant to 1-07.18(3) describes limits lower than those maintained by the Contractor.

1-07.18(3) Subcontractors

Contractor shall ensure that each subcontractor of every tier obtains and maintains at a minimum the insurance coverages listed in 1-07.18(5)A and 1-07.18(5)B. Upon request of the Contracting Agency, the Contractor shall provide evidence of such insurance.

1-07.18(4) Evidence of Insurance

The Contractor shall deliver to the Contracting Agency a Certificate(s) of Insurance and endorsements for each policy of insurance meeting the requirements set forth herein when the Contractor delivers the signed Contract for the work. The certificate and endorsements must conform to the following requirements:

1. An ACORD certificate or a form determined by the Contracting Agency to be equivalent.
2. Copies of all endorsements naming Contracting Agency and all other entities listed in 1-07.18(2) as Additional Insured(s), showing the policy number. The Contractor may submit a copy of any blanket additional insured clause from its policies instead of a separate endorsement. A statement of additional insured status on an ACORD Certificate of Insurance shall <u>not</u> satisfy this requirement.
3. Any other amendatory endorsements to show the coverage required herein.

1-07.18(5) Coverages and Limits

The insurance shall provide the minimum coverages and limits set forth below. Providing coverage in these stated minimum limits shall not be construed to relieve the Contractor from liability in excess of such limits. All deductibles and self-insured retentions must be disclosed and are subject to approval by the Contracting Agency. The cost of any claim payments falling within the deductible shall be the responsibility of the Contractor.

1-07.18(5)A Commercial General Liability

A policy of Commercial General Liability Insurance, including:

Per project aggregate
Premises/Operations Liability
Products/Completed Operations – for a period of one year following final acceptance of the work.
Personal/Advertising Injury
Contractual Liability
Independent Contractors Liability
Stop Gap / Employers' Liability
Explosion, Collapse, or Underground Property Damage (XCU)
Blasting (only required when the Contractor's work under this Contract includes exposures to which this specified coverage responds)

Such policy must provide the following minimum limits:

$1,000,000	Each Occurrence
$2,000,000	General Aggregate
$1,000,000	Products & Completed Operations Aggregate
$1,000,000	Personal & Advertising Injury, each offence

Stop Gap / Employers' Liability

$1,000,000	Each Accident
$1,000,000	Disease - Policy Limit
$1,000,000	Disease - Each Employee

1-07.18(5)B Automobile Liability

Automobile Liability for owned, non-owned, hired, and leased vehicles, with an MCS 90 endorsement and a CA 9948 endorsement attached if "pollutants" are to be transported. Such policy(ies) must provide the following minimum limit:

$1,000,000	combined single limit

1-07.18(5)C Workers' Compensation

The Contractor shall comply with Workers' Compensation coverage as required by the Industrial Insurance laws of the state of Washington.

1-07.23 Public Convenience and Safety

1-07.23(1) Construction under Traffic

(January 2, 2012 WSDOT GSP)

Section 1-07.23(1) is supplemented with the following:

Work Zone Clear Zone

The Work Zone Clear Zone (WZCZ) applies during working and nonworking hours. The WZCZ applies only to temporary roadside objects introduced by the Contractor's operations and does not apply to preexisting conditions or permanent Work. Those work operations that are actively in progress shall be in accordance with adopted and approved Traffic Control Plans, and other contract requirements.

During nonworking hours equipment or materials shall not be within the WZCZ unless they are protected by permanent guardrail or temporary concrete barrier. The use of temporary concrete barrier shall be permitted only if the Engineer approves the installation and location.

During actual hours of work, unless protected as described above, only materials absolutely necessary to construction shall be within the WZCZ and only construction vehicles absolutely necessary to construction shall be allowed within the WZCZ or allowed to stop or park on the shoulder of the roadway.

The Contractor's nonessential vehicles and employees private vehicles shall not be permitted to park within the WZCZ at any time unless protected as described above.

Deviation from the above requirements shall not occur unless the Contractor has requested the deviation in writing and the Engineer has provided written approval.

Minimum WZCZ distances are measured from the edge of traveled way and will be determined as follows:

Regulatory Posted Speed	Distance From Traveled Way (Feet)
35 mph or less	10 *
40 mph	15
45 to 55 mph	20
60 mph or greater	30

* or 2-feet beyond the outside edge of sidewalk

Minimum Work Zone Clear Zone Distance

(December 8, 2008 R&E GSP)
Section 1-07.23(1) is supplemented with the following:

Construction vehicles using a closed traffic lane shall travel only in the normal direction of traffic flow unless expressly allowed in an approved traffic control plan. Construction vehicles shall be equipped with flashing or rotating amber lights.

Work over an open lane of traffic will not be allowed, unless a plan for the protection of the traveling public from objects falling onto the traveled way is approved by the Engineer. This protection shall remain in place during construction and meet minimum vertical clearance for the highway.

Controlled Access
No special access or egress will be allowed the Contractor other than normal legal movements or as shown in the plans.

Pedestrian Access
The Contractor shall keep all pedestrian routes and access point (including sidewalks and crosswalks when located within the project limits) open and clear at all times unless permitted otherwise by the Engineer in an approved traffic control plan.

Signs and Traffic Control Devices
All signs and traffic control devices for the permitted closures shall only be installed during the hours specified on the plans. Construction signs, if placed earlier than the specified hours of closure, shall be turned or covered so as not to be visible to motorists.

Hours of Darkness
The Contractor shall, at no additional cost to the Contracting Agency, make all arrangements for operations during hours of darkness. A portable illumination system, which will adequately illuminate the entire work area shall be provided. Flagger stations and advance warning signs shall be illuminated with a minimum **150-watt** floodlight and to the satisfaction of the Engineer. Flares are for emergency use and are not considered a proper method of illumination.

Hour Adjustment

If the Engineer determines the permitted closure hours adversely affect traffic, the Engineer may adjust the hours accordingly. The Engineer will notify the Contractor in writing of any change in the closures hours.

Advance Notification

The Contractor shall be responsible for notifying private property owners, or tenants, five (5) working days in advance of scheduled interruptions of access to private roads or driveways. The Contractor shall notify the Engineer three (3) working days in advance of scheduled interruptions of access to private road or driveways. The Contractor shall only interrupt access to one half of any private road or driveway. The Contractor shall notify private property owners, or tenants, by having a representative of the Contractor personally contact the private property owner or tenant. If the property owner or tenant is not available, the Contractor shall leave a door hanger notice indicating the commencement date of work, duration of work, the type of work being done, and the Contractor's and Engineer's phone number and address for questions and concerns. The Engineer shall be provided adequate time to review, comment, and approve the door hanger notice prior to the Contractor placing any notices. Access shall be restored as soon as possible, but not later than the end of each working day. Any exception will only be allowed with the approval of the private property owner, or tenant, and the Engineer. All costs involved with public notification shall be incidental to the various bid items.

The Contractor shall notify the Engineer in writing 5 working days in advance of any lane closure, sidewalk closure, or both.

Public Notification

The Contractor shall notify the local fire, police, emergency service, and city engineering departments; transit companies; and the affected school district(s) in writing a minimum of 5 working days prior to each closure. The Contractor shall furnish copies of these notifications to the Engineer.

1-07.24 Rights of Way

(October 1, 2005 APWA GSP)

Delete this section in its entirety, and replace it with the following:

Street right of way lines, limits of easements, and limits of construction permits are indicated in the Plans. The Contractor's construction activities shall be confined within these limits, unless arrangements for use of private property are made.

Generally, the Contracting Agency will have obtained, prior to bid opening, all rights of way and easements, both permanent and temporary, necessary for carrying out the work. Exceptions to this are noted in the Bid Documents or will be brought to the Contractor's attention by a duly issued Addendum.

Whenever any of the work is accomplished on or through property other than public right of way, the Contractor shall meet and fulfill all covenants and stipulations of any easement agreement obtained by the Contracting Agency from the owner of the private property. Copies of the easement agreements may be included in the Contract Provisions or made available to the Contractor as soon as practical after they have been obtained by the Engineer.

Whenever easements or rights of entry have not been acquired prior to advertising, these areas are so noted in the Plans. The Contractor shall not proceed with any portion of the work in areas where right of way, easements or rights of entry have not been acquired until the Engineer certifies to the Contractor that the right of way or easement is available or that the right of entry has been received. If the Contractor is delayed due to acts of omission on the part of the Contracting Agency in obtaining easements, rights of entry or right of way, the Contractor will be entitled to an extension of time. The Contractor agrees that such delay shall not be a breach of contract.

Each property owner shall be given 48 hours notice prior to entry by the Contractor. This includes entry onto easements and private property where private improvements must be adjusted.

The Contractor shall be responsible for providing, without expense or liability to the Contracting Agency, any additional land and access thereto that the Contractor may desire for temporary construction facilities, storage of materials, or other Contractor needs. However, before using any private property, whether adjoining the work or not, the Contractor shall file with the Engineer a written permission of the private property owner, and, upon vacating the premises, a written release from the property owner of each property disturbed or otherwise interfered with by reasons of construction pursued under this contract. The statement shall be signed by the private property owner, or proper authority acting for the owner of the private property affected, stating that permission has been granted to use the property and all necessary permits have been obtained or, in the case of a release, that the restoration of the property has been satisfactorily accomplished. The statement shall include the parcel number, address, and date of signature. Written releases must be filed with the Engineer before the Completion Date will be established.

1-07.26 Personal Liability of Public Officers
(February 1, 2008 R&E GSP)

Section 1-07.26 is revised to read:

Neither the Mayor, the Ferndale City Council, employees of the City, or the Engineer shall be personally liable for any acts or failure to act in connection with the Contract, it being understood that in such matters, they are acting solely as agents of the City of Ferndale.

1-08 PROSECUTION AND PROGRESS

Add the following new section:

1-08.0 Preliminary Matters

(May 25, 2006 APWA GSP)

Add the following new section:

1-08.0(1) Preconstruction Conference

(October 10, 2008 APWA GSP)

Prior to the Contractor beginning the work, a preconstruction conference will be held between the Contractor, the Engineer and such other interested parties as may be invited. The purpose of the preconstruction conference will be:

1. To review the initial progress schedule;
2. To establish a working understanding among the various parties associated or affected by the work;
3. To establish and review procedures for progress payment, notifications, approvals, submittals, etc.;
4. To establish normal working hours for the work;
5. To review safety standards and traffic control; and
6. To discuss such other related items as may be pertinent to the work.

The Contractor shall prepare and submit at the preconstruction conference the following:

1. A breakdown of all lump sum items;
2. A preliminary schedule of working drawing submittals; and
3. A list of material sources for approval if applicable.

Add the following new section:

1-08.0(2) Hours of Work

(June 27, 2011 APWA GSP)

Except in the case of emergency or unless otherwise approved by the Contracting Agency, the normal straight time working hours for the contract shall be any consecutive 8-hour period between 7:00 a.m. and 6:00 p.m. of a working day with a maximum 1-hour lunch break and a 5-day work week. The normal straight time 8-hour working period for the contract shall be established at the preconstruction conference or prior to the Contractor commencing the work.

Written permission from the Engineer is required, if a Contractor desires to perform work on holidays, Saturdays, or Sundays; before 7:00 a.m. or after 6:00 p.m. on any day; or longer than an 8-hour period on any day. The Contractor shall apply in writing to the Engineer for such permission, no later than noon on the working day prior to the day for which the Contractor is requesting permission to work.

Permission to work between the hours of 10:00 p.m. and 7:00 a.m. during weekdays and between the hours of 10:00 p.m. and 9:00 a.m. on weekends or holidays may also be subject to noise control requirements. Approval to continue work during these hours may be revoked at any time the Contractor exceeds the Contracting Agency's noise control regulations or complaints are received from the public or adjoining property owners regarding the noise from the Contractor's operations. The Contractor shall have no claim for damages or delays should such permission be revoked for these reasons.

Permission to work Saturdays, Sundays, holidays, or other than the agreed upon normal straight time working hours Monday through Friday may be given subject to certain other conditions set forth by the Contracting Agency or Engineer. These conditions may include but are not limited to:

- The Engineer may require designated representatives to be present during the work. Representatives who may be deemed necessary by the Engineer include, but are not limited to: survey crews; personnel from the Contracting Agency's material testing lab; inspectors; and other Contracting Agency employees when in the opinion of the Engineer, such work necessitates their presence.
- On non-Federal aid projects, requiring the Contractor to reimburse the Contracting Agency for the costs in excess of straight-time costs for Contracting Agency representatives who worked during such times.
- Considering the work performed on Saturdays, Sundays, and holidays as working days with regard to the contract time.
- Considering multiple work shifts as multiple working days with respect to contract time, even though the multiple shifts occur in a single 24-hour period.

1-08.1 Subcontracting

Section 1-08.1 is supplemented with the following:

Prior to any subcontractor or lower tier subcontractor beginning work, the Contractor shall submit to the Engineer a certification that a written agreement between the Contractor and the subcontractor or between the subcontractor and any lower tier subcontractor has been executed.

A subcontractor or lower tier subcontractor will not be permitted to perform any work under the contract until the following documents have been completed and submitted to the Engineer:

1. Request to Sublet Work (Form 421-012), and
2. Contractor and Subcontractor or Lower Tier Subcontractor Certification.

The Contractor's records pertaining to the requirements of this Special Provision shall be open to inspection or audit by representatives of the Contracting Agency during the life of the contract and for a period of not less than three years after the date of acceptance of the contract. The Contractor shall retain these records for that period. The Contractor shall also guarantee that these records of all subcontractors and lower tier subcontractors shall be available and open to similar inspection or audit for the same time period.

1-08.3(2)A Type A Progress Schedule
(October 10, 2008 APWA GSP; may not be used on FHWA-funded projects)

Revise this section to read:

The Contractor shall submit $$3$$ copies of a Type A Progress Schedule no later than at the preconstruction conference, or some other mutually agreed upon submittal time. The schedule may be a critical path method (CPM) schedule, bar chart, or other standard schedule format. Regardless of which format used, the schedule shall identify the critical path. The Engineer will evaluate the Type A Progress Schedule and approve or return the schedule for corrections within 15 calendar days of receiving the submittal.

1-08.4 Prosecution of Work

Delete this section in its entirety, and replace it with the following:

1-08.4 Notice to Proceed and Prosecution of Work
(June 27, 2011 APWA GSP)

Notice to Proceed will be given after the contract has been executed and the contract bond and evidence of insurance have been approved and filed by the Contracting Agency. The Contractor shall not commence with the work until the Notice to Proceed has been given by the Engineer. The Contractor shall commence construction activities on the project site within ten days of the Notice to Proceed Date, unless otherwise approved in writing. The Contractor shall diligently pursue the work to the physical completion date within the time specified in the contract. Voluntary shutdown or slowing of operations by the Contractor shall not relieve the Contractor of the responsibility to complete the work within the time(s) specified in the contract.

When shown in the Plans, the first order of work shall be the installation of high visibility fencing to delineate all areas for protection or restoration, as described in the Contract. Installation of high visibility fencing adjacent to the roadway shall occur after the placement of all necessary signs and traffic control devices in accordance with 1-10.1(2). Upon construction of the fencing, the Contractor shall request the Engineer to inspect the fence. No other work shall be performed on the site until the Contracting Agency has accepted the installation of high visibility fencing, as described in the Contract.

(February 1, 2008 R&E GSP)
Section 1-08.4 is supplemented with the following:

Project Meetings
The Engineer shall be responsible for preparation of agenda, preparation of minutes and distribution of documentation. One set of the documentation will be sent to each participant. All meetings will be held at on-site, unless otherwise agreed upon.

Progress Meetings
Regular Progress Meetings shall be schedule by the Engineer. Progress Meetings shall be

held weekly or as otherwise schedule by the Engineer.

The Progress Meeting agenda shall include, but not be limited to:

1. Review minutes of previous meeting, amend minutes if necessary, and accept minutes.
2. Review unresolved questions and issues from previous Progress Meetings and further consider those questions and issues.
3. Review new questions and issues regarding delays, coordination with other agencies, changed conditions or work scope, interferences, utilities, and requests for information (RFI's).
4. Review corrective measures to regain projected schedule
5. Review status of submittals, RFI's, change issues, as-built documentation, and other correspondence.
6. Review effects of proposed changes on progress schedule and coordination
7. Contractor to present updated look-ahead / as-built schedule describing activities to occur in the upcoming three weeks, and to document the as-built schedule for work accomplished since the prior meeting. Contractor to present the updated schedule at each regular weekly progress meeting.

Coordination Meetings

Coordination Meetings will commence after the NTP has been issued. The purpose of the Coordination Meetings is to coordinate the Contractor's Work with the work being done concurrently at the Site by others. Coordination meetings will be scheduled in conjunction with progress meetings when appropriate.

Additional Meetings

Additional meetings will be scheduled as necessary for the completion of various portions of the Work. Meetings will include pre-installation, pre-testing or other purpose as required by the specifications, conditions on the jobsite, or as requested by the Engineer or the project team.

All costs involved with the various meetings shall be incidental to the various bid items.

(September 15, 2008 R&E GSP)

Order of Work

Culvert Replacement

Culvert Replacement work, between approximately STA 22+30 to STA 24+50, as shown on the Plans, shall not begin until 7/15/12. Any earlier start date for Culvert Replacement work shall be approved by the Engineer prior to beginning any work. Culvert Replacement work shall be substantially completed within 15 working days. The work in this Section includes, but is not limited to:

- Installing traffic control devices
- Clearing and grubbing
- Removal of structures and obstructions
- Structure excavation

- Utility (storm, sanitary, water main) installation and testing
- Culvert installation
- Backfilling and compaction
- Block wall installation
- Roadway gravel base
- Grading
- Temporary fencing installation

Pond Construction

The proposed pond is located east SD1 (SD 1 is shown on Plan Sheet 56, Regional Pond Storm Conveyance, approximate STA 2+19. The proposed pond location is also shown on the Plan Sheet 46). Pond Construction work, shall not begin until 8/1/12. Any earlier start date for Pond Construction work shall be approved by the Engineer prior to beginning any work. Pond Construction work shall be substantially completed within the working days noted in Time for Completion Section 1-08.5. The work in this Section includes, but is not limited to:

- Installing traffic control devices
- Clearing and grubbing
- Removal of structures and obstructions
- Pond excavation and embankment
- Construction and testing of utilities
- Installing gabion mattresses
- Grading
- Construction of maintenance road
- Construction of landscape and landscape restoration

1-08.5 Time for Completion

(March 13, 1995 WSDOT GSP)

Section 1-08.5 is supplemented with the following:

This project shall be physically completed within **110** working days.

(June 28, 2007 APWA GSP, Option A)

Revise the third and fourth paragraphs to read:

Contract time shall begin on the first working day following the Notice to Proceed Date.

Each working day shall be charged to the contract as it occurs, until the contract work is physically complete. If substantial completion has been granted and all the authorized working days have been used, charging of working days will cease. Each week the Engineer will provide the Contractor a statement that shows the number of working days: (1) charged to the contract the week before; (2) specified for the physical completion of the contract; and (3) remaining for the physical completion of the contract. The statement will also show the

nonworking days and any partial or whole day the Engineer declares as unworkable. Within 10 calendar days after the date of each statement, the Contractor shall file a written protest of any alleged discrepancies in it. To be considered by the Engineer, the protest shall be in sufficient detail to enable the Engineer to ascertain the basis and amount of time disputed. By not filing such detailed protest in that period, the Contractor shall be deemed as having accepted the statement as correct. <u>If the Contractor elects to work 10 hours a day and 4 days a week (a 4-10 schedule) and the fifth day of the week in which a 4-10 shift is worked would ordinarily be charged as a working day then the fifth day of that week will be charged as a working day whether or not the Contractor works on that day.</u>

Revise the sixth paragraph to read:

The Engineer will give the Contractor written notice of the completion date of the contract after all the Contractor's obligations under the contract have been performed by the Contractor. The following events must occur before the Completion Date can be established:

1. The physical work on the project must be complete; and
2. The Contractor must furnish all documentation required by the contract and required by law, to allow the Contracting Agency to process final acceptance of the contract. The following documents must be received by the Project Engineer prior to establishing a completion date:
    a. Certified Payrolls (Federal-aid Projects)
    b. Material Acceptance Certification Documents
    c. Annual Report of Amounts Paid as MBE/WBE Participants or Quarterly Report of Amounts Credited as DBE Participation, as required by the Contract Provisions.
    d. Final Contract Voucher Certification
    e. <u>Property owner releases per Section 1-07.24</u>

1-08.7 Maintenance during Suspension

(October 1, 2005 APWA GSP)

Revise the second paragraph to read:

At no expense to the Contracting Agency, the Contractor shall provide through the construction area a safe, smooth, and unobstructed roadway<u>, sidewalk, and path</u> for public use during suspension (as required in Section 1-07.23 or the Special Provisions). This may include a temporary road or detour.

1-08.9 Liquidated Damages

(NWR February 5, 2007)

Section 1-08.9 is supplemented with the following:

Delayed completion of the Culvert Replacement will result in impacts to the traveling public, increase fuel consumption, increase vehicle operating costs, increase pollution, and cause other inconveniences and harm far in excess of those resulting from delay of most projects.

Accordingly, the Contractor agrees:

1. To pay $1,000 liquidated damages per each working day prorated to the nearest day that Culvert Replacement work is not completed as specified in the Subsection **Notice to Proceed and Prosecution of the Work** and **Time for Completion** of the Special Provision **PROSECUTION AND PROGRESS.**

2. To authorize the Engineer to deduct these liquidated damages from any money due or coming due to the Contractor.

1-09 MEASUREMENT AND PAYMENT

1-09.2 Weighing Equipment

1-09.2(1) General Requirements for Weighing Equipment

(February 1, 2008 R&E GSP)

Section 1-09.2(1) is supplemented with the following:

Truck certified weight tickets must be machine-printed with gross, tare and net weights. Additional information required on each weight ticket: Truck Number, Driver's Name, Date, Load Time and Date, Load Site, Unload Time and Date, Unload Site. No handwritten weight tickets will be accepted.

At the Engineer's request, the Contractor shall provide the Engineer with a list of hauling vehicles and the licensed legal or permitted gross weight for each vehicle.

1-09.6 Force Account

(October 10, 2008 APWA GSP)

Supplement this section with the following:

The Contracting Agency has estimated and included in the Proposal, dollar amounts for all items to be paid per force account, only to provide a common proposal for Bidders. All such dollar amounts are to become a part of Contractor's total bid. However, the Contracting Agency does not warrant expressly or by implication, that the actual amount of work will correspond with those estimates. Payment will be made on the basis of the amount of work actually authorized by Engineer.

(February 1, 2008 R&E GSP)

Section 1-09.6 is supplemented with the following:

No claim for force account shall be allowed except upon written order by the Engineer prior to the performance of the work. The Contractor shall submit the required force account documentation to the Engineer on a daily basis unless agreed otherwise. The Contractor and the Engineer shall review all work or material to be paid for under force account on a daily basis unless agreed otherwise. The Contractor may propose corrections to the force account quantities and shall supply supporting documentation to the Engineer within 2 working days,

unless agreed otherwise, of having reviewed the force account quantities with the Engineer.

1-09.8 Payment for Material on Hand
(August 3, 2009 WSDOT GSP)

The last paragraph of Section 1-09.8 is revised to read:

The Contracting Agency will not pay for material on hand when the invoice cost is less than $2,000. As materials are used in the work, credits equaling the partial payments for them will be taken on future estimates. Each month, no later than the estimate due date, the Contractor shall submit a letter to the Project Engineer that clearly states: 1) the amount originally paid on the invoice (or other record of production cost) for the items on hand, 2) the dollar amount of the material incorporated into each of the various work items for the month, and 3) the amount that should be retained in material on hand items. If work is performed on the items and the Contractor does not submit a letter, all of the previous material on hand payment will be deducted on the estimate. Partial payment for materials on hand shall not constitute acceptance. Any material will be rejected if found to be faulty even if partial payment for it has been made.

1-09.9 Payments
(June 27, 2011 APWA GSP, Option A)
Supplement this section with the following:

Lump sum item breakdowns are not required when the bid price for the lump sum item is less than $20,000.

(June 27, 2011 APWA GSP, Option B)

Delete the fourth paragraph and replace it with the following:

Progress payments for completed work and material on hand will be based upon progress estimates prepared by the Engineer. A progress estimate cutoff date will be established at the preconstruction conference.

The initial progress estimate will be made not later than 30 days after the Contractor commences the work, and successive progress estimates will be made every month thereafter until the Completion Date. Progress estimates made during progress of the work are tentative, and made only for the purpose of determining progress payment. The progress estimates are subject to change at any time prior to the calculation of the Final Payment.

The value of the progress estimate will be the sum of the following:

1. Unit Price Items in the Bid Form — the approximate quantity of acceptable units of work completed multiplied by the unit price.
2. Lump Sum Items in the Bid Form — based on the approved Contractor's lump sum breakdown for that item, or absent such a breakdown, based on the Engineer's determination.

3. Materials on Hand — 100 percent of invoiced cost of material delivered to Job site or other storage area approved by the Engineer.
4. Change Orders — entitlement for approved extra cost or completed extra work as determined by the Engineer.

Progress payments will be made in accordance with the progress estimate less:

1. Retainage per Section 1-09.9(1), on non FHWA-funded projects;
2. The amount of Progress Payments previously made; and
3. Funds withheld by the Contracting Agency for disbursement in accordance with the Contract Documents.

Progress payments for work performed shall not be evidence of acceptable performance or an admission by the Contracting Agency that any work has been satisfactorily completed. The determination of payments under the contract will be final in accordance with Section 1-05.1.

1-09.13(3)A Administration of Arbitration

(October 1, 2005 APWA GSP)

Revise the third paragraph to read:

The Contracting Agency and the Contractor mutually agree to be bound by the decision of the arbitrator, and judgment upon the award rendered by the arbitrator may be entered in the Superior Court of the county in which the Contracting Agency's headquarters are located. The decision of the arbitrator and the specific basis for the decision shall be in writing. The arbitrator shall use the contract as a basis for decisions.

1-10 TEMPORARY TRAFFIC CONTROL

1-10.1 General

(February 4, 2008 R&E GSP)

Section 1-10.1 is supplemented with the following:

During grading operations, the elevation difference between the portion of the traveled way open to traffic and the adjoining portion of roadway shall be tapered at 10:1 or greater to allow cross traffic.

In addition, for any modifications to the access provisions, the Contractor shall furnish satisfactory documentation that the affected property owners concur with the proposed change. The Contractor shall coordinate with the Engineer and the property owners and make the necessary arrangements to accommodate the access requirements of the affected property owners and the public services.

The Contractor shall determine and place signs in accordance with the Manual on Uniform Traffic Control Devices (MUTCD) and the Plans.

1-10.2 Traffic Control Management

(February 4, 2008 R&E GSP)

Section 1-10.2 is supplemented with the following:

Before beginning work on the project, the Contractor shall designate a Traffic Control Supervisor. The Contractor shall provide the Engineer with a list of names and phone numbers of not more than six supervisory employees that may be called for traffic control, as needed, during working or non-working hours. The Contractor shall have at least one of these employees available at any time.

If the Contractor's employees are not available in a timely manner to take care of emergency traffic control work, Contracting Agency forces will perform this work on behalf of the Contractor. If Contracting Agency forces provide emergency traffic control, the costs to the Contracting Agency will be deducted from progress payments due the Contractor in accordance with Section 1-10.1 of the Standard Specifications.

1-10.2(1) General

(December 1, 2008 WSDOT GSP)

Section 1-10.2(1) is supplemented with the following:

Only training with WSDOT TCS card and WSDOT training curriculum is recognized in the State of Washington. The Traffic Control Supervisor shall be certified by one of the following:

The Northwest Laborers-Employers Training Trust
27055 Ohio Ave.
Kingston, WA 98346
(360) 297-3035

Evergreen Safety Council
401 Pontius Ave. N.
Seattle, WA 98109
1-800-521-0778 or
(206) 382-4090

The American Traffic Safety Services Association
15 Riverside Parkway, Suite 100
Fredericksburg, Virginia 22406-1022
Training Dept. Toll Free (877) 642-4637
Phone: (540) 368-1701

1-10.2(2) Traffic Control Plans
(February 4, 2008 R&E GSP)

Section 1-10.2(2) is supplemented with the following:

The Series K WSDOT Standard Plans are included in the contract documents as an appendix. These standard plans and the Traffic Control Plans included in the Contract Documents shall be considered as the project TCP's. The contractor may choose to submit alternate TCP's for approval as outlined in this section.

Any modifications to existing plans or new traffic plans shall be submitted to the Engineer for review and approval a minimum of five (5) working days prior to institution of the plan.

1-10.3 Traffic Control Labor, Procedures and Devices

1-10.3(3) Traffic Control Devices
(February 4, 2008 R&E GSP)
Section 1-10.3 is supplemented with the following:

As may be indicated in the Signing Plan or Traffic Control Plan, the Contractor may be required to install signs, warning lights, or both, on barricades.

1-10.4 Measurement

1-10.4(3) Reinstating Unit Items With Lump Sum Traffic Control
Section 1-10.4(3) is supplemented with the following:
(August 2, 2004 WSDOT GSP)

The bid proposal contains the item "Project Temporary Traffic Control," lump sum and the additional temporary traffic control items listed below. The provisions of Section 1-10.4(1), Section 1-10.4(3), and Section 1-10.5(3) shall apply.

"Flaggers and Spotters"
"Other Traffic Control Labor"

DIVISION 2
EARTHWORK

2-01 CLEARING, GRUBBING, AND ROADSIDE CLEANUP

2-01.1 Description
(February 4, 2008 R&E GSP)

Section 2-01.1 is supplemented with the following:

This item also includes any clearing and grubbing necessary for the construction of driveways and the reconstruction of intersecting roads shown on the plans.

Clearing and Grubbing work includes removal and disposal of topsoil to a depth of 6-inches and trees as shown on the plans and to a depth of approximately 18-inches along the proposed pond berm bearing footprint. In addition to natural materials, clearing and grubbing shall also include removing and disposing of all refuse and any remaining structures, obstructions, trees and/or tree stumps within the right-of-way excluding contiguous pavement or structures identified under "Removal of Structures and Obstructions", as directed by the Engineer.

2-01.2 Disposal of Useable Material and Debris
(February 4, 2008 R&E GSP)

Section 2-01.2 is supplemented with the following:

Unless otherwise provided in the specifications, all material removed under this item shall become the property of the Contractor.

2-01.2(1) Disposal Method No. 1 - Open Burning
(February 4, 2008 R&E GSP)

Section 2-01.2(1) is supplemented with the following:

Disposal method No. 1 shall not be permitted within the project limits.

2-01.2(3) Disposal Method No. 3 - Chipping
(February 4, 2008 R&E GSP)

Revise the fourth sentence to read:

"Unsold chips shall become the property of the Contractor and shall be removed from the project limits."

2-01.3 Construction Requirements

2-01.3(1) Clearing

(February 4, 2008 R&E GSP)

Section 2-01.3(1) is supplemented with the following:

8. The Contractor shall clear all areas staked and flagged by the Engineer prior to the placement of cut/fill stakes, offset stakes or grade hubs.
9. Trees shall be trimmed as shown on the Plans.
10. Tree trimming shall be sequenced so that overhanging limbs are removed prior to commencing construction activities. Construction activities include equipment staging, materials storage, and worker-vehicle parking.
11. When tree roots are encountered during construction activities, the Contractor shall carefully expose all roots greater than1 inch diameter, either by hand or gently with the machine bucket, and then cut cleanly with lopper or saw. Pulling and wrenching of the roots shall not be allowed.

2-01.3(2) Grubbing

Section 2-01.3(2) is supplemented with the following:

f. Stumps shall be removed except where doing so would damage water, sewer lines or other utilities. Voids left by stump removal shall be backfilled with a granular material and compacted in accordance with Section 2-03.3(14)C. All materials removed shall become the property of the Contractor and shall be disposed of outside the project limits.
g. If equipment outriggers are placed between the proposed sidewalk and the trees, the Contractor shall place plywood or large wood chips to spread out the weight of the outriggers.

2-01.5 Payment

(February 4, 2008 R&E GSP)

Section 2-01.5 is supplemented with the following:

"Clearing and Grubbing," lump sum. No additional payment shall be made for haul. Any other clearing and grubbing not specifically identified as being paid for elsewhere will be considered incidental to this bid item and no other payment shall be made.

2-02 REMOVAL OF STRUCTURES AND OBSTRUCTIONS

2-02.1 Description

(September 15, 2008 R&E GSP)

Section 2-02.1 is supplemented with the following:

Also included will be existing Portland Cement concrete pavement, asphalt concrete pavement, chip seal, cement concrete curbs, gutter, sidewalk, driveways, retaining walls, culverts, ecology blocks, guardrail and posts, plugging drainage pipes, landscaping structures, fire hydrants, fences, and other structures necessary to complete the work indicated on the plans or as directed by the Engineer. Equipment, labor, and materials necessary to perform the work as specified shall be considered a portion of this work. All material shall be hauled offsite to a permitted, Contractor provided disposal site in accordance with Section 2-03.3(7)C. No payment will be made for haul.

2-02.3 Construction Requirements
(February 4, 2008 R&E GSP)

Section 2-02.3 is supplemented with the following:

Utility Removal
Cavities left by removal of features by other parties, i.e., utility poles or other obstructions, shall be backfilled and compacted by the Contractor in accordance with Section 2-03.3(14)C.

Use of Explosives
Explosives shall not be used in the demolition.

2-02.3(2) Removal of Bridges, Box Culverts, and other Drainage Structures
(August 4, 2009 R&E GSP)
Section 2-02.3(2) is supplemented with the following:

Removal of Drainage Structures
Where shown in the Plans, or at other locations as determined by the Engineer, the Contractor shall remove catch basins regardless of the size or type. Each catch basin shall be removed in its entirety. Prior to backfilling the resultant void, the Contractor shall plug and abandon the existing pipe(s) with commercial concrete in accordance with Section 7-08.3(4).

Voids left by catch basin removal shall be backfilled and compacted in accordance with Section 2-03.3(14)C.

All materials removed shall become the property of the Contractor and shall be disposed of outside the project limits.

2-02.3(3) Removal of Pavement, Sidewalks, Curbs and Gutters
(February 4, 2008 R&E GSP)

Section 2-02.3(3) is supplemented with the following:

Delete Item 1. No on-site burial of pavement, sidewalks, curbs and gutters, is allowed.

Item 3 is supplemented with the following: "At locations where the existing concrete is to remain, the horizontal sawcut line shall not vary more than 1/8 inch along the edge of a 10-

foot straightedge placed on the surface parallel to the horizontal sawcut line."

Removal of Asphalt Concrete Pavement and Portland Cement Concrete Pavement
The approximate thicknesses of the pavement are:

Refer to the "Geotechnical Engineering Reports" contained in the appendix.

Removal of Cement Concrete Curb, Gutter and Sidewalk
The Contractor shall use a sawcut to delineate the curb, gutter and sidewalk to be removed from curb, gutter and sidewalk to remain. The Contractor shall take care to avoid damaging adjacent curb, gutter and sidewalk to remain. Any damage caused to the curb, gutter and sidewalk to remain, as a result of the Contractor's operations, shall be repaired to the satisfaction of the Engineer at no additional cost to the Contracting Agency.

2-02.4 Measurement

(February 4, 2008 R&E GSP)

Section 2-02.4 is supplemented with the following:

Removal of drainage structures will be measured per each for each drainage structure removed.

Removal of Portland cement concrete pavement will be measured by the cubic yard. All excavated material will be measured in the position it occupied before the excavation was performed.

Saw-cut ACP will be measured by the linear foot-inch along the line and slope of the cut prior to sawcutting and as staked by the Engineer. Saw-cut, if used for the pavement repair, shall not be measured.

Saw-cut PCC will be measured by the linear foot-inch along the line and slope of the cut prior to sawcutting and as staked by the Engineer.

2-02.5 Payment

(February 4, 2008 R&E GSP)

Section 2-02.5 is supplemented with the following:

The lump sum contract price for "Removal of Structures and Obstructions" shall be full compensation for all tools, equipment, materials, and labor to excavate and dispose of the above materials, including Haul and disposal fees; transporting to and stacking the ecology blocks. Removal of any structures and obstructions readily apparent by visual inspection from the ground surface and not identified elsewhere will be considered incidental to this bid item.

"Removing Drainage Structures", per each.

The unit contract price per each for "Removing Drainage Structures" shall be full pay to perform the work as specified, including sawcutting and disposal.

"Removing Portland Cement Conc. Pavement", per cubic yard.
The unit contract price per cubic yard for "Removing Portland Cement Conc. Pavement" shall be full pay for performing the work as specified, including hauling and disposal.

The unit contract price per linear foot-inch for "Saw-cut ACP" and "Saw-cut PCC" as indicated on the Bid Proposal shall be full compensation for all labor, including hand removal if required, material, tools and equipment required to complete the Bid Items in accordance with Section 1-04.1.

2-03 ROADWAY EXCAVATION AND EMBANKMENT

2-03.1 Description

Section 2-03.1 is supplemented with the following:

The work described in this section, regardless of the nature or type of the materials encountered includes excavating and grading the roadway and areas for curb, gutter and sidewalk, driveways, excavation or embankment required to construct the stormwater facility, excavating in borrow pits, excavating below grade, excavating channels, removing slide materials and disposing of all excavated material. This work also includes stockpiling, placing and compacting Engineer approved materials generated during roadway excavation at locations shown on the Plans or as directed by the Engineer. Any excavation or embankment required to maintain positive drainage to or from drainage ditches or swales will be considered incidental to this bid item. This item also includes any excavation required to construct new driveway grades.

Excess material shall become the property of the contractor for disposal. This work may include temporary stockpiling of material as dictated by the contractors operations. No specific stockpile sites are provided within the project limits, however on-site stockpiling may be permitted as approved by the Engineer. The costs for stockpiling shall be included in the bid items in this section.

2-03.3(7)C Contractor-Provided Disposal Site

Section 2-03.3(7)C is supplemented with the following:

Before completing any filling outside of the project limits, the Contractor, or property owner desiring to receive the fill, shall acquire all permits and approvals required for the use of the disposal site.

2-03.3(10) Selected Material

Section 2-03.3(10) is supplemented with the following:

As indicated in the contract, existing suitable excavation materials, shall be used as embankment, unless otherwise directed by the Engineer.

2-03.3(14) Embankment Construction

Section 2-03.3(14) is supplemented with the following:

This item consists of compacting embankments constructed in accordance with Section 2-03.3(14) using excavated material. The Engineer shall approve all embankment material and compaction equipment prior to their use by the Contractor. Roadway Excavation material shall not be placed above subgrade anywhere within the roadway section unless approved by the Engineer.

2-03.3(14)C Compacting Earth Embankments

Section 2-03.3(14)C is supplemented with the following:

Only Method B is allowed.

Moisture Content – Within the limits described below, the Contractor shall adjust moisture content during compaction to produce a firm, stable embankment. The Contractor shall not begin compaction until the moisture content is so adjusted.

Under Method B, the moisture content of the Pond Embankment material shall be between -1% to 5% of the determined optimum determined by the tests described in Section 2-03.3(14)D. The Pond Embankment optimum moisture content is estimated to be between 12 to 16 percent. However, the optimum determined by the described tests. If the material contains too little moisture to compact properly, the Engineer may order the Contractor to water the material in specific amounts. In this case, the Contracting Agency will pay the unit Contract price for water (Section 2-07).

2-03.3 (14)E Unsuitable Foundation Excavation

Section 2-03.3(14)E is supplemented with the following:

Prior to any backfilling, the Contractor shall proof roll the subgrade with a loaded dump truck, large self-propelled vibrating roller, or equivalent piece of equipment, to verify stability of the subgrade. The associated cost to proof roll the roadway will be considered incidental to the unit contract prices of this Contract.

2-03.3(10) Selected Material

Section 2-03.3(10) is supplemented with the following:

Selected material shall include material located at the proposed pond location. This selected material shall be used for the pond berm embankment construction and shall meet the following gradation requirements:

Sieve Size	Percent Passing
3"	100
No. 4	80-100
No. 200	30-85

All percentages are by weight

If greater than 60% passes the US No. 200 sieve, the soils shall be sampled to verify the soil is not defined as "non-plastic" based on ASTM D 4318. Soils defined as "non-plastic" will not be allowed.

2-03.4 Measurement

Section 2-03.4 is supplemented with the following

Unsuitable Foundation Excavation Including Haul shall be measured beginning 2 feet below the roadway excavation lower limits to the depth of excavation as directed by the Engineer. There is no limit to the depth of excavation to be paid under this item.

Groundwater may be encountered within the project boundary. No payment will be made for dewatering or material replacement. When the Engineer requires excavated material to be removed, stockpiled, and moved again, the material will be measured to the neat line of that removed from the stockpile. No separate measurement or payment will be made for stockpiled materials.

Only one determination of the original ground elevation will be made on this project. Measurement for roadway excavation and embankment will be based on the original ground elevations recorded previous to the award of this contract with the volume of planing bituminous pavement, asphalt concrete pavement, and portland cement concrete pavement deducted. Control stakes will be set during construction to provide the Contractor with all essential information for the construction of excavation and embankments.

If discrepancies are discovered in the ground elevations which will materially affect the quantities of earthwork, the original computations of earthwork quantities will be adjusted accordingly.

Earthwork quantities will be computed, either manually or by means of electronic data processing equipment, by use of the average end area method or by the finite element analysis method utilizing digital terrain modeling techniques.

Copies of the ground cross-section notes will be available for the bidder's inspection, before the opening of bids, at the Engineer's office.

Upon award of the contract, copies of the original ground cross-sections will be furnished to the successful bidder on request to the Engineer.

Removal of Asphalt Concrete Pavement will not be measured under this bid item. Pavement removal shall be paid under the bid items “Removal of Structures and Obstructions”.

Removal of Portland Cement Concrete Pavement will not be measured under this bid item. Removal of Portland Cement Concrete Pavement shall be paid under the bid item “Removing Portland Cement Conc. Pavement”.

"Embankment Compaction" and "Pond Embankment Compaction" includes loading, hauling, stockpiling, placing, grading, and compacting suitable excavated material generated under

any roadway excavation within the Project limits.

2-03.5 Payment

Section 2-03.5 is supplemented with the following:

The unit contract price per cubic yard for "Roadway Excavation Including Haul" and "Pond Excavation Incl. Haul" shall be compensation for all labor, materials, tools and equipment necessary to excavate, shape, load, stockpile for later embankment or otherwise dispose of surplus or unsuitable material off-site as specified herein. This item shall include the cost of compacting and proof rolling the subgrade.

"Embankment Compaction" and "Pond Embankment Compaction" includes loading, hauling, stockpiling, placing, grading, and compacting suitable excavated material generated under any roadway excavation within the Project limits.

2-04 HAUL

2-04.4 Measurement

(February 5, 2008 R&E GSP)

Section 2-04.4 is revised to read:

No specific unit of measurement shall apply. All costs involved for haul shall be incidental to and included in the various bid items.

2-04.5 Payment

(February 5, 2008 R&E GSP)

Section 2-04.5 is deleted in its entirety.

2-07 WATERING

2-07.4 Measurement

(September 15, 2008 R&E GSP)

Section 2-07.4 is supplemented with the following:

The Contractor shall provide water distribution records including truck tickets and operator time records if requested by the Engineer. The contractor will not be allowed to use City water from fire hydrant without a suitable backflow preventor and meter. Prior to using any City hydrant, the Contractor shall submit a test report verifying that the backflow preventor is functioning property. Use of City water must be pre-approved by the Public Works Department.

2-09 STRUCTURE EXCAVATION

2-09.3 Construction Requirements

Select excavated material, as approved by the Engineer, shall be used as backfill. If the Engineer determines that native material is not suitable for trench backfill, import gravel shall be used and payment shall be made per Section 4-02.5.

2-09.3(1)E Backfilling

CDF shall be placed at locations where the storm sewer crosses over water mains, where the separation between the top of the storm sewer and bottom of the water main is less than 18", or where required by the Engineer. The estimated volume of CDF for these crossings is 20' (length) X 1.5' (depth) X 5' (width).

2-09.3(4) Construction Requirements, Structure Excavation, Class B

Section 2-09.3(4) is supplemented with the following:

All trenches shall be backfilled and completed by the end of the day. No payment shall be made for backfill of native materials. Gravel base shall be used for backfill unless the Engineer approves the use of native material.

The following new Section is created:

2-13 SELECTED GRADING

2-13.1 Description

This work includes final adjustments to the streambed to create a low flow channel and to the stream banks (including around stream structures) to account for the natural variability of the materials delivered to the site.

2-13.3 Construction Requirements

Before Selected Grading, the Contractor shall perform the excavation, and streambed gravel installation as required by Section 8-32. No Select Grading shall be performed before the Engineer has approved the stream grading and structure and gravel installation. The Contractor shall provide the Engineer and the Washington Department of Fish and Wildlife Area Habitat Biologist (AHB) 72-hours notice prior to the Selected Grading and schedule a day for the AHB and Engineer to be on site. Selected Grading shall be directed in the field by the Engineer.

2-13.5 Measurement

Work performed under the item "Selected Grading" shall be measured in accordance with Section 1-09.6 Force Account.

2-13.5 Payment

"Selected Grading", per Force Account.

The price per Force Account for "Selected Grading" shall be full pay for all material, labor, tools, equipment and incidentals required.

DIVISION 4
BASES

4-02 GRAVEL BASE

4-02.2 Materials
(February 5, 2008 R&E GSP)

Section 4-02.2 is replaced with:

Material shall meet the requirements of Section 9-03.10 Gravel Base as modified. Refer to revised Section 9-03.10 Aggregate for Gravel Base.

4-02.4 Measurement
(February 5, 2008 R&E GSP)

Section 4-02.4 is revised to read:

"Gravel Base" shall be measured by the ton.

4-02.5 Payment
(February 5, 2008 R&E GSP)

Section 4-02.5, delete the second paragraph and replace with the following:

"Gravel Base" per ton.

Section 4-02.5 is supplemented with the following:

Proof rolling of material at the direction of the Engineer will be considered incidental to this bid item.

4-04 BALLAST AND CRUSHED SURFACING

4-04.4 Measurement
(February 5, 2008 R&E GSP)

Section 4-04.4 is revised as follows:

The second paragraph is revised to read:

"Crushed Surfacing Top Course", shall be measured by the ton.

4-04.5 Payment

(February 5, 2008 R&E GSP)

Section 4-04.5, 1st item is revised as follows:

"Crushed Surfacing Top Course", per ton.

DIVISION 5
SURFACE TREATMENTS AND PAVEMENTS

5-04 HOT MIX ASPHALT

5-04.1 Description

(January 5, 2012 R&E GSP)

Section 5-04.1 is supplemented with the following:

Prior to hot mix asphalt paving, the Contractor shall coordinate an on-site construction meeting with the asphalt paving company, Contracting Agency, material testing company and the Engineer.

5-04.3 Construction Requirements

(February 25, 2008 R&E GSP)

Section 5-04.3 is supplemented with the following:

All castings within paved areas shall be adjusted to finished grade after the final lift of paving as shown on the plans and paid per Section 7-05.5.

5-04.3(5)A Preparation Of Existing Surfaces

Section 5-04.3(5)A is supplemented with the following:

(NWR February 9, 2004)
The Contractor shall ensure that the asphalt for tack coat does not enter into State waters, including wetlands.

In accordance with Section 1-07.15(1) **Spill Prevention, Control and Countermeasures Plan** (SPCC), as part of the SPCC the Contractor shall address the mitigating measures to be taken in the event that the paving operation is suspended or terminated prior to the asphalt for tack coat being fully covered.

5-04.3(5)C Crack Sealing

(February 25, 2008 R&E GSP)

Section 5-04.3(5)C is supplemented with the following:

All joints shall be sealed with using Rubberized Asphalt meeting the requirement of section 9-04.10.

5-04.3(5)D Soil Residual Herbicide

(July 1, 2010 R&E GSP)

Section 5-04.3(5)D is supplemented with the following:

The Contractor shall use a granular type herbicide material where HMA is placed over base material, non-ACP material, or concrete surfaces. The Contractor shall request approval, from the Contracting Agency, of the herbicide type prior to its placement.

5-04.3(7)A Mix Design
(March 10, 2010 APWA GSP)

Delete this section and replace it with the following;

1. **General**. Prior to the production of HMA, the Contractor shall determine a design aggregate structure and asphalt binder content in accordance with WSDOT Standard Operating Procedure 732. Once the design aggregate structure and asphalt binder content have been determined, the Contractor shall submit the HMA mix design on DOT form 350-042 demonstrating the design meets the requirements of Sections 9-03.8(2) and 9-03.8(6). HMA accepted by nonstatistical evaluation requires a mix design verification. For HMA accepted by commercial evaluation only the first page of DOT form 350-042 and the percent of asphalt binder is required. In no case shall the paving begin before the determination of anti-strip requirements has been made. Anti-strip requirements will be determined by:

    a. Testing by WSDOT in accordance with TM 718.
    b. Testing by Contractor in accordance with WSDOT TM 718.
    c. Historical aggregate source ant-strip use provided by WDOT.

    The mix design will be the initial Job Mix Formula (JMF) for the HMA being produced. Any additional adjustments to the JMF will require the approval of the Project Engineer and may be made per Section 9-03.8(7).

2. **Mix Design Verification.** Verification shall be accomplished by one of the following processes:

    a. Submit samples to WSDOT State Materials Lab for WSDOT verification testing in accordance with WSDOT Standard Specifications.
    b. The contracting agency will perform tests to verify the mix design in accordance with the Field Verification Testing Process.
    c. Reference a mix design that has been previously verified by the Field Verification Testing Process or verified by WSDOT State Materials Lab on a previous project.
    d. Perform Field Verification Testing on a sample of HMA provided by the Contractor prior to paving.

Mix design verification is valid for one year from the date of verification. At the discretion of the Engineer, agencies may accept mix designs verified beyond the verification year with certification from the Contractor that the materials and sources are the same as those shown on the original mix design.

3. **Field Verification Testing Process.** The Contracting agency will collect three Production Samples of HMA on the first day of paving per AASHTO T 168 sampling procedures.

   a. The Contracting agency will test one Production Sample in accordance with section 5-04.3(8)A for field verification per the requirements of Section 9-03.8(7).
   b. If the test results from the first Production Sample are within the tolerances of section 9-03.8(7), the mix design will be considered verified and the test results will be used as acceptance sample number one.
   c. If the test results from the first Production Sample are outside the tolerances of section 9-03.8(7), the other two samples will be tested and the results of all three tests will be used for acceptance in accordance with Section 5-04.5(1) and will be used in the calculation of the CPF the maximum CPF shall be 1.00.

4. Prior to the first day of paving, six Ignition Furnace Calibration Samples shall be obtained to calibrate the Ignition Furnaces used for acceptance testing of the HMA. Calibration samples shall be provided by the Contractor when directed by the Engineer. Calibration samples shall be prepared in accordance with WSDOT SOP 728.

5-04.3(8)A1, General
(March 10, 2010 APWA GSP)

Delete these sections and replace them with the following:

Acceptance of HMA shall be as defined under nonstatistical or commercial evaluation.

Nonstatistical evaluation will be used for all HMA not designated as Commercial HMA in the contract documents.

Commercial evaluation will be used for Commercial HMA and for other classes of HMA in the following applications: sidewalks, road approaches, ditches, slopes, paths, trails, gores, prelevel, and pavement repair. Other nonstructural applications of HMA accepted by commercial evaluation shall be as approved by the Project Engineer. Sampling and testing of HMA accepted by commercial evaluation will be at the option of the Project Engineer. Commercial HMA can be accepted by a contractor certification letter stating the material meets the HMA requirements defined in the contract.

5-04.3(8)A4, Definition of Sampling Lot and Sublot
(March 10, 2010 APWA GSP)

Delete this section and replace it with the following:

For the purpose of acceptance sampling and testing, a lot is defined as the total quantity of material or work produced for each job mix formula (JMF) placed. Only one lot per mix

design will be expected to occur. The initial JMF is defined in Section 5-04.3(7)A Mix Design. The Contractor may request a change in the JMF in accordance with Section 9-03.8(7). If the request is approved, all of the material produced up to the time of the change will be evaluated on the basis of tests on samples taken from that material and a new lot will begin.

For proposal quantities less then 2500 tons sampling and testing for evaluation shall be performed as described in 5-04.3(7)A, item 3, Field Verification Testing Process. The verification sample referenced in item 3b may be used as an acceptance sample, additional testing will be at the discretion of the Engineer. When using a previously verified mix design, testing for volumetric properties may be waived at the engineer's discretion. At least one acceptance sample is required when using this method of acceptance.

For proposal quantities greater than 2500 tons sampling and testing for evaluation shall be performed as described in 5-04.3(7)A, item 3, Field Verification Testing Process, for the first 2500 tons of mix placed. The verification sample referenced in item 3b may be used as an acceptance sample for the first 2500 tons of mix placed. Additional testing will be at the rate of one sample per 800 tons of mix placed or as directed by the Engineer. When using a previously verified mix design, testing for volumetric properties may be waived at the engineer's discretion.

5-04.3(8)A5, Test Results
(March 10, 2010 APWA GSP)

Delete this section and replace it with the following:

The Engineer will furnish the Contractor with a copy of the results of all acceptance testing performed in the field at the beginning of the next paving shift. The Engineer will also provide the Composite Pay Factor (CPF) of the completed sublots after three sublots have been produced. The CPF will be provided by the midpoint of the next paving shift after sampling. Sublot sample test results (gradation and asphalt binder content) may be challenged by the Contractor. For HMA mixture accepted by statistical evaluation with a mix design that did not meet the verification tolerances, the test results in the test section including the percent air voids (Va) may be challenged. To challenge test results, the Contractor shall submit a written challenge within 7-calendar days after receipt of the specific test results. A split of the original acceptance sample will be sent for testing to either the Region Materials Laboratory or the State Materials Laboratory as determined by the Project Engineer. The split of the sample with challenged results will not be tested with the same equipment or by the same tester that ran the original acceptance test. The challenge sample will be tested for a complete gradation analysis and for asphalt binder content. The results of the challenge sample will be compared to the original results of the acceptance sample test and evaluated according to the following criteria:

Deviation
U.S. No. 4 sieve and larger Percent passing ±4.0
U.S. No. 8 sieve Percent passing ±2.0
U.S. No. 200 sieve Percent passing ±0.4
Asphalt binder Percent binder content ±0.3
Va Percent Va ±0.7

If the results of the challenge sample testing are within the allowable deviation established above for each parameter, the acceptance sample test results will be used for acceptance of the HMA. The cost of testing will be deducted from any monies due or that may come due the Contractor under the Contract at the rate of $250 per challenge sample. If the results of the challenge sample testing are outside of any one parameter established above, the challenge sample will be used for acceptance of the HMA and the cost of testing will be the Contracting Agency's responsibility.

5-04.3(8)A7 Test Section – HMA Mixtures
(March 10, 2010 APWA GSP)

Delete this section.

5-04.3(9) Spreading And Finishing
(February 25, 2008 R&E GSP)

Section 5-04.3(9) is supplemented with the following:

During grading operations, the elevation difference between the portion of the traveled way open to traffic and the adjoining portion of roadway shall be tapered at 10:1 or greater to allow cross traffic.

5-04.3(14) Planing Bituminous Pavement
(February 25, 2008 R&E GSP)

Section 5-04.3(14) is supplemented with the following:

Transverse Joints
Unless specifically directed by the Engineer, all connections to existing asphalt shall be by a vertical sawcut abutting the pavements together and heated prior to mat construction. All joints of new hot mix asphalt to an existing pavement shall be sealed with an appropriate asphalt joint sealer. The Contractor shall construct and maintain a temporary hot mix asphalt wedge in accordance with Section 5-04.3(12) across the entire width of the transverse edge when traffic is allowed prior to paving. The wedge shall be constructed before opening the lane to traffic. The Contractor shall remove the wedge immediately prior to paving.

Beveled Edge Planing
A beveled edge shall be constructed in areas with a planed depth of more than 0.20 foot that will not be paved during the same work shift.

The Contractor shall use a beveled cutter on the mandrel of the planing equipment, or other approved method(s), to eliminate the vertical edge(s). The beveled edge(s) shall be constructed at a 4:1 slope.

5-04.5(1)A Price Adjustments for Quality of HMA Mixture
(March 10, 2010 APWA GSP)

Delete the first paragraph and table and replaced them with the following:

Statistical analysis of quality of gradation and asphalt content will be performed based on Section 1-06.2 using the following price adjustment factors:

Table of Price Adjustment Factors

Constituent	Factor "f"
All aggregate passing: 1 ½", 1", ¾", ½", 3/8" and No. 4 sieves	2
All aggregate passing No. 8	15
All aggregate passing No. 200 sieve	20
Asphalt binder	52

Delete items 1-3 in Paragraph two and replaced with the following:

A pay factor will be calculated for sieves listed in Section 9-03.8(7) for the class of HMA and for the asphalt binder.

1. **Nonstatistical Evaluation.** Each lot of HMA produced under Nonstatisical Evaluation and having all constituents falling within the tolerance limits of the job mix formula shall be accepted at the unit contract price with no further evaluation. When one or more constituents fall outside the nonstatistical acceptance tolerance limits in Section 9-03.8(7), the lot shall be evaluated in accordance with Section 1-06.2 to determine the appropriate CPF. The nonstatistical tolerance limits will be used in the calculation of the CPF and the maximum CPF shall be 1.00. When less than three sublots exist, backup samples of the existing sublots or samples from the street shall be tested to provide a minimum of three sets of results for evaluation.

2. **Commercial Evaluation.** If sampled and tested, HMA produced under Commercial Evaluation and having all constituents falling within the tolerance limits of the job mix formula shall be accepted at the unit contract price with no further evaluation. When one or more constituents fall outside the commercial acceptance tolerance limits in Section 9-03.8(7), the lot shall be evaluated to determine the appropriate CPF. The commercial tolerance limits will be used in the calculation of the CPF and the maximum CPF shall be 1.00. When less than three sublots exist, backup samples of the existing sublots or samples from the street shall be tested to provide a minimum of three sets of results for evaluation.

For each lot of HMA produced under Nonstatistical or Commercial Evaluation when the

calculated CPF is less than 1.00, a Nonconforming Mix factor (NCMF) will be determined. The NCMF equals the algebraic difference of CPF minus 1.00 multiplied by 60 percent. The Job Mix Compliance Price Adjustment will be calculated as the product of the NCMF, the quantity of HMA in the lot in tons, and the unit contract price per ton of the mix.

If a constituent is not measured in accordance with these Specifications, its individual pay factor will be considered 1.00 in calculating the composite pay factor.

5-04.4 Measurement
(July 1, 2010 R&E GSP)

Section 5-04.4 is supplemented with the following:

All reference to measurement of Soil Residual Herbicide, Temporary Pavement Marking, Removing Temporary Pavement Marking, and Anti-Stripping Additive are deleted. No additional measurement will be given to these items.

(September 5, 2006)
No specific unit of measurement will apply to the calculated item of asphalt cost price adjustment.

5-04.5 Payment
(July 1, 2010 R&E GSP)

Section 5-04.5 is supplemented with the follows:

All reference to payment of Soil Residual Herbicide, Temporary Pavement Marking, Removing Temporary Pavement Marking, and Anti-Stripping Additive are deleted. All costs for furnishing, installing, and performing these items shall be incidental to and included in the unit bid price of various HMA items.

5-04.5(1)B Price Adjustments for Quality of HMA Compaction
(March 10, 2010 APWA GSP)

Delete this section and replace it with the following:

The maximum CPF of a compaction lot is 1.00

For each compaction lot of HMA when the CPF is less than 1.00, a Nonconforming Compaction Factor (NCCF) will be determined. THE NCCF equals the algebraic difference of CPF minus 1.00 multiplied by 40 percent. The Compaction Price Adjustment will be calculated as the product of the NCCF, the quantity of HMA in the lot in tons and the unit contract price per ton of the mix.

5-04.5(2)

(September 8, 2008)

Asphalt Cost Price Adjustment

The Contracting Agency will make an Asphalt Cost Price Adjustment, either a credit or a payment, for qualifying changes in the reference cost of asphalt binder. The adjustment will be applied to partial payments made according to Section 1-09.9 for the following bid items when they are included in the proposal:

"HMA Cl. ___ PG ___"
"HMA for Approach Cl. ___ PG ___"
"HMA for Preleveling Cl. ___ PG ___"
"HMA for Pavement Repair Cl. ___ PG ___"
"Commercial HMA"

The adjustment is not a guarantee of full compensation for changes in the cost of asphalt binder. The Contracting Agency does not guarantee that asphalt binder will be available at the reference cost.

The Contracting Agency will establish the asphalt binder reference cost twice each month and post the information on the Agency website at:

http://www.wsdot.wa.gov/biz/construction/AsphaltIndex.cfm.

The reference cost will be determined using posted prices furnished by Poten & Partners, Inc. If the selected price source ceases to be available for any reason, then the Contracting Agency will select a substitute price source to establish the reference cost.

The base cost established for this contract is the reference cost posted on the Agency website for the period immediately preceding the bid opening date.

Adjustments will be based on the most current reference cost for Western Washington or Eastern Washington as posted on the Agency website, depending on where the work is performed. For work completed after all authorized working days are used, the adjustment will be based on the posted reference cost during which contract time was exhausted. The adjustment will be calculated as follows:

No adjustment will be made if the reference cost is within 5% of the base cost.

If the reference cost is greater than or equal to 105% of the base cost, then
Adjustment = (Current Reference Cost – (1.05 x Base Cost)) x (Q x 0.056).

If the reference cost is less than or equal to 95% of the base cost, then
Adjustment = (Current Reference Cost – (0.95 x Base Cost)) x (Q x 0.056).

Where Q = total tons of all classes of HMA paid in the current month's progress payment.

"Asphalt Cost Price Adjustment", by calculation.

"Asphalt Cost Price Adjustment" will be calculated and paid for as described in this section. For the purpose of providing a common proposal for all bidders, the Contracting Agency has entered an amount in the proposal to become a part of the total bid by the Contractor.

DIVISION 6
STRUCTURES

6-02 Concrete Structures
6-02.1 Description

Section 6-02.1 is supplemented with the following:

This Work consists of the construction of all Structures (and their parts) made of portland cement concrete with or without reinforcement, including Precast Reinforced Concrete Four Sided Structures .

6-02.3 Construction Requirements

Manufacturing Plant Quality control Program
The manufacturing plant of precast reinforced concrete four sided structures shall be certified by WSDOT

Design Criteria
The precast reinforced concrete four sided structures shall be designed for an HS-25 vehicular load, in accordance with the current AASHTO LFRD Bride specifications and Washington State Bride Design manual. In addition the precast reinforced wing walls shall be designed for the support of the 18" sanitary sewer line and bracket as noted on construction documents.

Precast reinforced concrete four sided structures shall be rigid frames with monolithic lower corners internally reinforced for moment and shear resistance. A top slab may be cast as a separate element to create the specific frame geometry. This is referred to as a four sided precast concrete structure.

1. The structure system shall provide moment and shear resistance from the lateral load condition where backfill is placed full width and full height at one side only of the precast structure.

Shop Drawings
Precast Reinforced Concrete four Sided structures, the contractor shall submit two sets of design calculations and shop drawings to the Engineer of Record for the Engineer's review before fabrication. Contractor shall allow 15 working days for review of calculations and shop drawings.

The contractor shall affirm with the design calculations submitted and the shop drawings for the Engineer's Review that the four sided structure conforms to the specified design criteria. The design calculations shall include, but not be limited to, analysis of the following elements:

1. Flexure (substructure and superstructure)
2. Compression in the walls
3. Shear (substructure and superstructure)

4. Design base precast element bearing pressure versus allowable soil bearing pressure.
5. Deflection
6. Minimum and maximum reinforcement ratios
7. Distribution of flexural reinforcement
8. Fatigue
9. Live load distribution

For four sided structure, in addition to items 1 through 9 under shop drawing content requirements, the following shop drawing details shall be submitted:

1. Top slab details and connections
2. Wing wall and connection details
3. Erection and backfill procedures
4. Complete, site specific, itemized bar list for all steel reinforcement
5. 18" sanitary sewer support bracket & attachment to precast elements

Casting

Whenever the minimum finished backfill depth above the top of the structure is less than 1'-0", either all steel reinforcing bars in the span unit shall be epoxy coated or, the minimum concrete cover dimension from the face of concrete to the face of the top mat of steel reinforcing bars shall be 2-1/2".

Whenever the minimum concrete cover dimension from the face of concrete to the face of the top mat of steel reinforcing bars is less than 1-1/2", the top mat of steel reinforcing bars in the span unit shall be epoxy coated.

The contractor may strip forms from precast reinforced concrete four sided structures after the concrete reaches a minimum compressive strength of 3,000 psi, provided the precast reinforced concrete four sided structure remains in the casting bed. All damage from stripping is the contractor's responsibility.

Finishing

The contractor shall finish all exposed surfaces of the structure with a class 2 finish.
The contractor shall mark the following information, using waterproof paint, on the inside of a vertical leg of each section of the structure:

1. Design loads
2. Span and rise dimension
3. Job number
4. Fabrication date
5. Manufacture's name and trademark

All steel elements and fasteners exposed to the exterior shall be hot-dip galvanized in accordance with ASTM A153/A123. Repair all damage to hot-dip galvanized coating by hot-stick or high-zinc paint method in accordance with ASTM A780.

Handling and storage

The contractor shall not move four sided structure sections from the casting bed into storage

until the concrete reaches a minimum compressive strength of 70% of the final design strength specified in the shop drawing and design calculation submittal.

The contractor shall pick, move, and store the four sided structure sections in the cast position until the concrete reaches a minimum compressive strength equal to the final design strength specified in the shop drawing and design calculation submittal.

Shipping

Prior to shipping, the precast reinforced concrete four sided structure fabricator shall provide the Engineer the following documentation

Concrete batch tickets
Concrete cylinder break results
Material certifications
Copies of all changes from the plans and specifications

Erection

The contractor shall erect and backfill precast reinforced concrete four sided structures in accordance with the erection sequence specified in the shop drawings reviewed by the engineer.

Adjacent precast units shall be connected by welding the weld-tie anchors. The weld-tie anchor spacing shall not exceed 6'-0". After connecting the weld-tie anchors, the contractor shall paint the exposed metal surfaces with one coat of primer. Except if adjacent precast units shall be connected by keyways filled with grout per the manufactures guidelines.

6-02.4 Measurement

Section 6-02.4 is supplemented with the following:

No specific unit of measurement will apply to the lump sum item of removal of Inverted 3 Sided Box Culvert.

6-02.5 Payment

Section 6-02.5 is supplemented with the following:

"Inverted 3 Sided Box Culvert ", lump sum.
For the purpose of payment, such culvert items as adhesive, concrete inserts, foam backing rod, grout, lifting loops, premolded joint filler, etc., for which there is no pay item included in the proposal, are considered as culvert minor items as shown and noted in the Plans and as outlined in these specifications shall be included in the lump sum contract price for "Inverted 3 Sided Box Culvert".

6-06 BRIDGE RAILINGS

6-06.1 Description

Section 6-06.1 is supplemented with the following:

This work consists of providing and building pedestrian handrailings that meet the requirements of the Plans, these Specifications and the Engineer.

6-06.4 Measurement

Section 6-02.4 is supplemented with the following:

Pedestrian Railing will be measured by the linear foot along the line and slope at the base of the completed railing.

6-06.5 Payment

Section 6-06.5 is supplemented with the following:

"Pedestrian Railing", per linear foot.

The unit price for pedestrian railing, per linear foot, shall be full pay for all work to complete the installation of the pedestrian railing including but not limited to coring, anchor bolts, base plates, grout, thickened concrete sidewalk edge, labor, material, tools and equipment necessary to satisfactorily complete the work.

6-13 STRUCTURAL EARTH WALLS

6-13.1 Description

Section 6-13.1 is supplemented with the following:

This work consists of constructing two types of structural earth walls (SEW's), Ultrablock and Keystone, within the project limits, as indicated in the Plans and as described in this Section.

6-13.2 Materials

Section 6-13.2 is supplemented with the following:

Keystone

Wall block units shall be Keystone 'Compac' and grey in color and Ultrablock. Wall block units may be substituted with approval from the Engineer. Wall block wall units shall also include cap-stones.

Ultrablock

Wall block units shall be Ultrablock or approved equal. Wall block units shall be a natural grey concrete color free from any dies or pigments. Wall block units shall measure H 2.5' x L 5' x W 2.5' and shall weight approximately 4,320 lbs. Top blocks may measure H 1.25' x L 5' x W 2.5'. Wall block units shall have ½" chamfered edges on all outside corners and shall have a smooth face finish on the exposed face. Wall block units shall be constructed in a

single concrete pour, cold joints in blocks will not be permitted. Geogrid reinforcing material shall be as specified in the plans or approved equal.

(April 2, 2007)
Concrete Block Faced Structural Earth Wall Materials

General Materials

Concrete Block

Acceptability of the blocks will be determined based on the following:

1. Visual inspection.

2. Compressive strength tests, conforming to Section 6-13.3(4).

3. Water absorption tests, conforming to Section 6-13.3(4).

4. Manufacturer's Certificate of Compliance in accordance with Section 1-06.3.

5. Freeze-thaw tests conducted on the lot of blocks produced for use in this project, as specified in Section 6-13.3(4).

6. Copies of results from tests conducted on the lot of blocks produced for this project by the concrete block fabricator in accordance with the quality control program required by the structural earth wall manufacturer.

The blocks shall be considered acceptable regardless of curing age when compressive test results indicate that the compressive strength conforms to the 28-day requirements, and when all other acceptability requirements specified above are met.

Testing and inspection of dry cast concrete blocks shall conform to ASTM C 140, and shall include block fabrication plant approval by WSDOT prior to the start of block production for this project.

Mortar

Mortar shall conform to ASTM C 270, Type S, with an integral water repellent admixture as approved by the Engineer. The amount of admixture shall be as recommended by the admixture manufacturer. To ensure uniform color, texture, and quality, all mortar mix components shall be obtained from one manufacturer for each component, and from one source and producer for each aggregate.

Drainage Geosynthetic Fabric

Drainage geosynthetic fabric shall be a non-woven geosynthetic conforming to the requirements in Section 9-33.1, for Construction Geotextile for Underground Drainage, Moderate Survivability, Class B.

Backfill for Concrete Block Faced Structural Earth Wall

All backfill material within the structural earth wall reinforced zone shall be free draining, free from organic or otherwise deleterious material.

Backfill material within the reinforced zone shall conform to Section 9-03.9(3), crushed surfacing top course.

All material within the structural earth wall reinforced zone shall be substantially free of shale or other soft, poor durability particles, and shall not contain recycled materials, such as glass, shredded tires, portland cement concrete rubble, or asphaltic concrete rubble.

For walls with metallic soil reinforcement, all material within the structural earth wall reinforced zone shall meet the following chemical requirements:

Property	Test Method	Allowable Test Value
Resistivity	WSDOT Test Method 417	3,000 ohm-cm, min.
pH	WSDOT Test Method 417	5 to 10
Chlorides	AASHTO T 291	100 ppm max.
Sulfates	AASHTO T 290	200 ppm max.

If the resistivity of the backfill material equals or exceeds 5,000 ohm-cm, the specified chloride and sulfate limits may be waived.

For walls with geogrid soil reinforcement, all material within the structural earth wall reinforced zone shall meet the following chemical requirements:

Property	Test Method	Allowable Test Value
pH	WSDOT Test Method 417	4.5 to 9

Wall backfill material satisfying these gradation, durability, and chemical requirements shall be classified as nonagressive.

Proprietary Materials

KeySystem I Wall

Reinforcing geogrid shall be Strata-Grid SG 150 or approved equal.

Block alignment pins shall be fiberglass conforming to the requirements of Keystone Retaining Wall Systems, Inc.

Block connector pins shall conform to AASHTO M 32, and shall be galvanized after fabrication in accordance with AASHTO M 111.

6-13.3 Construction Requirements

Section 6-13.3 is supplemented with the following:

(April 5, 2004)

Concrete Block Faced Structural Earth Wall

Concrete block faced structural earth walls shall be constructed of the following wall system or approved equal. The Contractor shall make arrangements to purchase the concrete blocks, soil reinforcement, attachment devices, joint filler, and all necessary incidentals from the source identified with each wall system:

KeySystem I Wall

KeySystem I is a registered trademark of Keystone Retaining Wall Systems, Inc.

Keystone Retaining Wall Systems, Inc.
2061 NW Aloclek Drive Suite 907
Hillsboro, OR 97214
(800) 733-7470
(FAX (503) 439-8592

Block walls shall be installed in accordance with the manufacturer's recommendations, manufacturer's standard details and details shown in the Contract Documents. Should a conflict occur between the manufacturer's details and the details shown in the Contract Documents, the more stringent shall apply. No additional payment will be made as a result of a conflict.

6-13.4 Measurement

Section 6-13.4 is supplemented with the following:

Crushed surfacing top course used for block wall backfill will be measured in accordance with Section 4-04.4.

6-13.5 Payment

Section 6-13.5 is supplemented with the following:

"Structural Earth Wall, Keystone" and "Structural Earth Wall, Ultrablock", per square foot. All costs in connection with furnishing materials, including but not limited to reinforcing geogrid, plastic moisture barrier, pins, for and constructing block walls, including constructing leveling pads when specified, underdrain pipe, underdrain pipe geotextile, and concrete cap as shown on the Plans, shall be included in the unit contract price per square foot.

DIVISION 7
DRAINAGE STRUCTURES, STORM SEWERS, SANITARY SEWERS, WATER MAINS, AND CONDUITS

7-02 CULVERTS

Add the following new section:

7-02.3(6) Debris Barrier for Pipe

When shown in the Plans, debris bars shall be constructed in accordance with the Plans.

7-02.4 Measurement

Section 7-02.4 is supplemented with the following:

Storm Sewer Debris Barrier shall be measured by the unit per each.

7-02.5 Payment

Section 7-02.5 is supplemented with the following:

"Storm Sewer Debris Barrier ___ In. Diam.", per each.

7-04 STORM SEWERS

7-04.1 Description

(February 5, 2008 R&E GSP)

Section 7-04.1 is supplemented with the following:

The soils on the site may be considered suitable for trench backfill beneath the roadbed prism. Native materials may be used for trench backfill within the roadway prism with approval from or at the direction of the Engineer.

7-04.2 Materials

Section 7-04.2 is supplemented with the following:

"Ductile Iron Storm Sewer Pipe 9-05.13"

7-04.3(1) Cleaning and Testing

7-04.3(1)A General

Section 7-04.3(1)A is supplemented with the following:

Storm Drain Pipe shall be tested visually for alignment with full circle visibility required between drainage structures. Storm drain structures shall be cleaned of sediment and debris prior to final acceptance.

7-04.4 Measurement

Section 7-04.4 is supplemented with the following:

Measurement for the various bid items for Storm Sewer pipe as indicated in the bid proposal form, shall be per linear foot. The following items shall be incidental and included in the unit price per linear foot:

1. Dewatering if required.
2. Pipe bedding as shown on the Plans
3. Compaction
4. Installation of storm sewer pipe
5. Coupling bands, fittings, and associated gaskets.
6. Cleaning
7. Connection to existing storm drains, culverts, and structures
8. Other work and materials, not specifically identified as being paid elsewhere
9. Bevel of pipe ends if applicable.

Inline check valves and pinch valves shall be measured by the unit per each.

7-04.5 Payment

Section 7-04.5 is supplemented with the following:

The unit contract price per linear foot for the various bid items for Storm Sewer pipe as indicated in the bid proposal form, shall be full compensation for all labor, material, tools and equipment required to complete the Bid Items in accordance with Section 1-04.1.

"Storm Sewer Debris Barrier ___ In. Diam.", per each.
The unit Contract price per each for the debris barriers specified shall be full pay for all Work to furnish and install the debris barrier complete in place on the storm sewer, including trenching, backfilling, and jointing.

"____ In. Diam. Inline Check Valve" and "____ In. Diam. Pinch Valve", per each.
The unit Contract price per each for the valves specified shall be full pay for all Work to furnish and install the valve complete in place on the storm sewer, including trenching, backfilling, and jointing.

7-05 MANHOLES, INLETS, AND CATCH BASINS

7-05.1 Description

Section 7-05.1 is supplemented with the following:

This item also includes frames and grates in designated areas. Thru-curb inlet frame and grate shall be used at locations with 6 inch high cement concrete traffic curb and gutter as noted on the Plans. The adjusting of any new storm drain catch basin frame, manhole ring and cover, for the purpose of matching new finish grades shall be incidental to the cost of installation. Existing manholes, inlets, and catchbasins within the Project boundary which are

nearest to the point of connection into the storm drain system and other manholes, inlets, and catchbasins which are impacted by construction activities will be cleaned by the Contractor. This work is incidental to the various bid items in this Section.

7-05.3 Construction Requirements

Section 7-05.3 is supplemented with the following:

Where called for in the Plans, existing grates shall be removed and catch basins, inlets, and sanitary manholes shall be furnished with locking solid metal covers and frames or locking metal grates and frames as detailed in the Plans and Standard Plans.

Sanitary Sewer Manholes

Where necessary to complete the removal of existing sanitary sewer pipe for the installation of new sanitary sewer manhole, the Contractor shall pump existing sanitary sewer flows around the area of work and/or pump directly into tanker trucks. The required time of pumping shall be sufficient to allow the work to be completed for each manhole.

Pumps used for the temporary diversion of sanitary sewer flows shall be capable of passing solids and other materials typically found in wastewater flows.

The Contractor shall give a minimum of one week notice to the Contracting Agency prior to the planned installation of sanitary sewer manhole. At the time of notice, the Contractor shall provide a Sanitary Sewer Pump Around Plan for review and approval by the Contracting Agency.

The Sanitary Sewer Pump Around Plan shall show method of removing the existing sanitary sewer pipe, proposed materials for the sanitary sewer pipe removal, and the sequence of demolition and removal. The plan shall detail the containment, collection, and disposal of all debris. The Contractor shall not begin removal operations until receiving the Engineer's approval of the Sanitary Sewer Pump Around Plan.

The Contractor may at their option choose to make the connection at night. If night work is elected, the Contractor shall be responsible for all necessary lighting, extra equipment and personnel needed to complete the work. The Contractor shall be responsible for all overtime pay for employees as a result of night work. The Contractor is cautioned that City of Ferndale employees are not on duty for night work. Should City of Ferndale employees be needed to aid in the night work, the Contractor will be billed overtime rates by the Contracting Agency per hour for City employees.

According to available information, the highest expected flows at the location where the sanitary sewer manhole is to be installed is approximately 3 cubic feet per second (cfs). Typical flow rates will vary. At each location where pumping is required, at least two pumps shall be supplied, both individually capable of pumping the necessary flows the required distances and against the required elevation head. One shall be designated as the primary pump, and the second shall be a back-up pump.

Tanker trucks shall empty their loads back into the City of Ferndale's wastewater collection system at a sanitary sewer manhole located at approximately STA 26+63, 0.5 LT.

Should the Contractor elect to construct a temporary bypass pumping system around the work area for the upstream flow, the pump around for flow shall occur from the sanitary sewer manhole at STA 20+78 to the sanitary sewer manhole located at STA 26+63, 0.5 LT. The distance to be pumped between these two sanitary sewer manholes is approximately 590 feet. The ground elevation difference between these two manholes is approximately 3.5 feet; the invert elevation difference is approximately 5 feet. The Contractor shall confirm this distance and elevation difference in the field and size the pumps accordingly.

The Contractor shall designate a person to oversee the pumps during their operation. This person shall be on site at all times while the pump around is occurring and shall continually monitor the pump operation. The individual shall be familiar with the operation of the pumps and shall be capable switching between pumps if necessary, refueling the pumps, etc.

The Contractor shall take all necessary precautions to prevent an uncontrolled spill of untreated wastewater.

Roadway must remain open to the passage of traffic during all pumping operations.

7-05.3(1) Adjusting Manholes and Catch Basins to Grade
(February 5, 2008 R&E GSP)

Section 7-05.3(1), paragraph 1 is revised to read:

Where shown in the Plans or where directed by the Engineer, the existing manholes, catch basins, inlets, <u>water valve boxes, or water meter boxes</u> shall be adjusted to the grade as staked or otherwise designated by the Engineer.

7-05.4 Measurement

(July 12, 2010 R&E GSP)
The sixth paragraph of Section 7-05.4 is revised to read:

Connections to existing manholes will be measured per each.

Section 7-05.4 is supplemented with the following:

Measurement for the various inlets, manholes, vaults, and catch basins as indicated in the Bid Proposal, shall be per each. The following items shall be incidental and included in the unit price per each:

1. Dewatering if required
2. Gaskets, fittings, inlets, frames and grates
3. Baffles, plates, sluice gates
4. Bedding

5. Compaction
6. Curb modifications required per the Standard Plans
7. Connection to existing culverts, structures and drain lines
8. Sanitary Sewer Pump Around Plan
9. Other work and materials, not specifically identified as being paid elsewhere
10. Temporary pumping and transportation of sewer flows, including pumps and trucks.

Solid Locking Ring and Cover or Frame and Cover for existing manholes and catchbasins will be measured by the unit for each assembly installed.

No specific unit of measure shall apply for the item "Adjustments to Finished Grade."

Measurement for "Hot Mix Asphalt" required for Adjustments to Finished Grades shall be per ton in accordance with Section 5-04.

7-05.5 Payment

(July 12, 2010 R&E GSP)

The sixteenth item, "Connection to Drainage Structure", of Section 7-05.5 is revised to read:

"Connect to Existing Manhole", per each

Section 7-05.5 is supplemented with the following:

"Adjustments to Finished Grade", lump sum.
The lump sum price for "Adjustments to Finished Grade" as indicated in the Bid Proposal Form shall be full compensation for all labor, tools, equipment, and materials necessary to adjust existing structures to finished grades within the project limits.

"Solid Locking Frame and Cover", per each

Channelizing the existing manhole shall be incidental to the bid item "Connect to Existing Manhole."

"Pond Outlet Control Structure Catchbasin", per each.

Payment for "Hot Mix Asphalt" required for Adjustments to Finished Grades shall be per ton in accordance with Section 5-04.

7-08 GENERAL PIPE INSTALLATION REQUIREMENTS

7-08.2 Materials

Section 7-08.2 is supplemented with the following:

All trenches within or beneath the roadbed prism shall be backfilled with suitable native material as approved by the Engineer. If suitable native material is unavailable, trenches shall be backfilled with Gravel Base in accordance with Section 4-02.

Detectable marking tape shall be specifically manufactured for marking and locating underground utilities. Tape shall be solid aluminum foil, visible on the up-printed side, encased in protective high visibility, inert polyethylene plastic jacket, six inches minimum width. Aluminum foil thickness shall be 0.35 mils minimum or thicker if necessary to enable detection from the ground surface by a metal detector when the tape is buried at a depth of 3 feet. Laminate thickness shall be 5 mils minimum. Tape shall have permanent black lettering minimum 1 inch high printed contiguously the entire length of the tape identifying the facility (SEWER, for example). Color shall be in accordance with APWA Uniform Color Code for Temporary Marking of Underground Facilities and in ANSI Z535.1, Safety Color Code. Clips for joining sections of tape shall be tin or nickel-coated and furnished by the tape manufacturer. Tape shall be Terra Tape, Sentry Line Detectable as manufactured by Reef Industries, Detectable tape as manufactured by Mutual Industries, or Detectable Tape as manufactured by Presco.

7-08.3 Construction Requirements

Section 7-08.3 is supplemented by the following:

Roadway must remain open to the passage of traffic during the pipe installation.

7-08.3(2)G Jointing of Dissimilar Pipe

Section 7-08.3(2)G is supplemented with the following:

Existing storm drains shall be jointed to proposed CPDP by use of factory-fabricated adapter couplings or a pipe collar or as shown in the Plans. The Contractor shall cut existing storm drains. The Contractor shall remove the portions of the storm drain to provide for the installation of the required fitting at the point of connection. All damage caused by the Contractor's operation to existing storm drains to remain in place shall be repaired by the Contractor at no expense to the Contracting Agency. The Contractor shall determine the exact length of the existing storm drains that must be removed.

7-08.5 Payment

The fifth paragraph of this section is revised to read:

Plugging pipes shall be incidental to the various bid items.

(July 12, 2010 R&E GSP)

Section 7-08.5 is supplemented with the following:

"Removal of Unsuitable Material Including Haul", per cubic yard.
The unit contract price per cubic yard for "Removal of Unsuitable Material Including Haul" shall be full pay for all work to remove unsuitable material, haul and disposal of unsuitable material, as specified in Section 7-08.3(1)A.

Payment for "Quarry Spalls" required for trenches as shown on the Plans shall be per ton.

7-09 WATER MAINS

7-09.1 Description

Section 7-09.1 is supplemented with the following:

Suitable native materials shall be used for trench backfill with approval from or at the direction of the Engineer. Unsuitable native material shall become the property of the contractor for disposal. Excess suitable native material shall be embanked according to the plans and specifications.

All thrust blocks shall be installed per details shown on the plans and inspected by the Engineer prior to backfilling. All bends shall include a thrust block per the details or as indicated on the Plans. Thrust blocks may be substituted with restrained joints at the discretion of the Contractor. The Contractor shall submit detailed sketches and plans of the proposed restrained joints to the Engineer not less than one week prior to the expected construction. The costs for thrust blocks or restrained joints shall be incidental to other items of work. No additional payment shall be made should the Contractor choose to substitute restrained joints for thrust blocks

This work also consists of constructing stovepipe watermains at locations directed by the Engineer where the proposed watermain conflicts with unexpected existing utilities, or for other reasons.

7-09.2 Materials

Section 7-09.2 is supplemented with the following:

Ductile Iron Pipe shall be in accordance with Section 9-30.1(1) for Ductile Iron Pipe.

Fittings shall be ductile iron and shall meet the requirements of AWWA C110-71 and AWWA C104-71. Joints shall meet the requirements of C111. Fittings shall be cement mortar lined meeting the requirements of AWWA C104-71.

7-09.3(5) Grade and Alignment

Section 7-09.3(5) is supplemented with the following:

Finished grade is the proposed ground elevation unless otherwise staked by the Engineer or Surveyor. Pipes installed, which do not meet minimum cover requirements, shall be replaced at the Contractor's expense. Minimum cover over waterlines shall be 3-feet, except for where specifically noted on the plans.

7-09.3(7)A Dewatering of Trench

Section 7-09.3(7)A is supplemented with the following:

If the Contractor fails to adequately dewater the trench and prevent water or other materials from entering the pipe, the Contractor shall at their expense thoroughly clean the line per section 7-09.3(24)A, prior to disinfecting the main. Dewatering trenches is incidental to the cost of pipe installation.

7-09.3(8) Removal and Replacement of Unsuitable Materials

Section 7-09.3(8) is supplemented with the following:

Unsuitable material consists of excavated silt, clay, and organic material and in-situ materials which provide less than 1500 psf bearing capacity (as determined by a penetrometer test by the Engineer) shall be excavated and replaced with select backfill or ballast at the direction of the Engineer. All unsuitable material shall be removed from the site and hauled to a permitted, Contractor provided disposal site in accordance with Section 2-03.3(7)C.

7-09.3(9) Bedding The Pipe

Section 7-09.3(9) is supplemented with the following:

The contractor shall bed the pipe with Engineer approved native material, or provide imported bedding material meeting the requirements for Gravel Backfill 9-03.12(3). Bedding material or suitable native material used for pipe bedding will be considered incidental to the pipe bid item.

7-09.3(10) Backfilling Trenches

Section 7-09.3(10) is supplemented with the following:

Native backfill containing organics, un-compactable or deleterious materials are considered unsuitable. Driveways must be filled and compacted as required for driveway and pavement repair in accordance with the Plans. Where the Engineer determines that the native material is not suitable for backfill, the Contractor shall provide imported trench backfill material in accordance with Section 9-03.10 as modified. No additional payment shall be made for placement or compaction in the trench. Excess native materials after trench backfill shall be embanked in accordance with the plans and specs. Payment of imported backfill is per ton per Section 4-02. When water mains are installed within the roadway prism, trench backfill shall include the minimum structural section for the roadway. Detectable marking tape shall be installed over the water main.

7-09.3(11) Compaction of Backfill

Section 7-09.3(11) is supplemented with the following:

Trenches which are located outside the roadway may be backfilled with native material upon approval of the Engineer, and compacted to 85% of maximum density as specified in Section 2-03.3(14)D. All other trenches shall be compacted to 95% of the maximum dry density. Compaction of native or imported backfill shall be incidental to other items of work.

7-09.3(19)A Connections to Existing Mains

Section 7-09.3(19)A is supplemented with the following:

Connection to existing mains is the full responsibility of the Contractor. Temporary routing of existing pipelines or services, shoring, temporary thrust blocks, extra fittings required to route the pipe over or under existing or new pipe or other utilities and all other work and materials required for making complete, permanent and workable connections are incidental to other items of work.

The Contractor shall be responsible for determining which residents will be affected by shutoffs, and will notify them 24 hours in advance. The Contractor shall notify private property owners, or tenants, by having a representative of the Contractor personally contact the private property owner or tenant. If the property owner or tenant is not available, the Contractor shall leave a door hanger notice indicating the commencement date of work, duration of work, the type of work being done, and the Contractor's and Engineer's phone number and address for questions and concerns. The Engineer shall be provided adequate time to review, comment, and approve the door hanger notice prior to the Contractor placing any notices.

The Contractor shall locate and verify the type of pipe, size, and depth prior to making the connection. Detailed sketches and plans of the connection proposed by the Contractor shall be given to the Engineer not less than one week prior to the expected construction. The City of Ferndale shall be notified not less than two (2) working days prior to connection to existing mains.

7-09.3(24) Disinfection of Water Mains

Section 7-09.3(24) is supplemented with the following:

The liquid chlorine injection method described below or approved alternate method shall be used. Hypochlorite granules (65%) shall be mixed with water and injected into the main to acquire a minimum of 50 mg/l of chlorine in the main. A typical method is as follows: The chlorine solution is mixed in a container (new, clean garbage can) and fed into the new water main using a pressurizing pump. The injection is made at a corporation stop or similar fitting at the fill point of water from the existing City of Ferndale main. Filling and injection rates shall be reviewed by the Engineer prior to disinfection. Chlorine content at the beginning and end of each required 24-hour disinfection period, and prior to bacteriological testing shall be sampled by the Engineer. The cost for the first sequence of sampling and lab testing shall be paid for by the City of Ferndale. Subsequent testing and inspection shall be paid by the Contractor. The Engineer shall be notified 24 hours prior to conducting disinfecting and flushing operations.

7-09.3(24)A Flushing

Section 7-09.3(24)A is supplemented with the following:

Water for flushing mains may be taken from a direct connection to existing mains providing an approved backflow device is utilized. Velocity for testing must equal or exceed 2.5 fps.

The connection must be capable of passing at least 400 gallons per minute (gpm) for flushing 8-inch diameter mains.

The Contractor shall be responsible for disposal of treated water flushed from mains and shall neutralize the waste water before disposal. An adequate amount of reducing agent shall be applied to water being disposed of in order to thoroughly neutralize the chlorine residual remaining in the water per AWWA Standard Section C651.

7-09.3(24)N Final Flushing and Testing

(July 12, 2010 R&E GSP)

Section 7-09.3(24)N is supplemented with the following:

Upon completion of final flushing, the main shall be filled with water and allowed to remain filled for 24 hours. The Engineer shall obtain a sample at the end of this 24-hour period. A satisfactory report shall be received before placing the lines into service.

7-09.3(24)O Repetition of Flushing and Testing

Section 7-09.3(24)O is supplemented with the following:

The City shall furnish water for the initial flushing and testing process. In the event additional water is needed for flushing or testing, the Contractor shall connect a meter and pay the City for actual water used, at the commercial rate. The Contractor will pay for additional bacteriological testing required because of failed samples. The Contractor will be responsible for all cost associated with re-testing, including laboratory fees, and inspection.

7-09.4 Measurement

Section 7-09.4 is supplemented with the following:

Measurement for connect to existing watermain shall be measured per each connection completed.

Measurement for payment of stovepipe watermain shall be measured per each installed.

No measurement shall be made for marking tape. Marking tape shall be considered incidental to the work of constructing the water main.

No measurement shall be made for clearing and grubbing, removal of existing street improvements, removal of the abandoned watermain, removal of existing valve boxes, protection of existing utilities and service, trench excavation and pipe zone backfill, pipe zone bedding, thrust blocks, and compaction of backfill.

7-09.5 Payment

Section 7-09.5 is supplemented with the following:

"Connect to Existing Watermain __" Diam.", per each.

The unit contract price bid per each "Connect to Existing Watermain" shall be full compensation for all work to connect to the existing mains, including but not limited to excavating, removing existing fittings and thrust blocks, backfilling, laying and jointing pipe, pipe and fittings, and cover and cleanup."

"Stovepipe Watermain, ___ In. Diam.", per each
The unit contract price bid per each for "Stovepipe Watermain, ___ In. Diam" shall be full pay for all work to install the stovepipe watermain, including but not limited to excavating, backfilling, laying and jointing pipe, tapping the main, corporation stops, pipe and fittings, thrust blocks, and cover and cleanup.

"Testing Water Main" shall be paid per lump sum of completed installation actually tested and shall be full pay for all labor, material and equipment required to conduct the required tests.

7-12 VALVES FOR WATER MAINS

7-12.1 Description

Section 7-12.1 is supplemented with the following:

All valves shall be thrust blocked per the detail shown on the plans. All valve boxes shall be new and a uniform type.

7-12.2 Materials

Section 7-12.2 is supplemented with the following:

Valves shall meet the requirements of AWWA C509 or C-515 and shall be iron body, bronze-mounted, with resilient seated wedge device and O-ring stuffing box. All valves shall be provided with a valve box conforming to Section 9-30.3(4) and 9-30.3(6) and valves outside of the pavement section shall be encased in concrete and furnished with a concrete valve marker conforming to Section 9-30.3(5).

Valve stem extensions will be required on operating nuts located 4 feet below grade per section 9-30.3(6). Extensions shall be incidental to gate valves.

The following new Section is added:

7-12.3(2) Adjustments to Finished Grade

Existing valve boxes, which are to remain, shall be adjusted to finished grade. This work shall be included in the bid item "Adjustments to Finished Grade."

7-14 HYDRANTS

7-14.1 Description

Section 7-14.1 is supplemented with the following:

This work includes the installation of Blue Raised Pavement Markers on the roadway centerline adjacent to all hydrants.

7-14.2 Materials

Section 7-14.2 is supplemented with the following:

The City of Ferndale Standard Fire Hydrants is "M&H model 929". The pumper port shall be oriented to face the main road.

Fire hydrants shall be painted City colors with two coats of Urethane paint, applied per the paint manufacturer's specifications.

A blue reflector, installed 1 foot off the road centerline towards the hydrant shall be included in the bid item.

All labor, equipment, and materials necessary to connect fire hydrants shall be incidental to the unit bid prices. Materials include, but are not limited to: gate valves, fittings, spool fittings, restraints, and thrust blocks."

7-14.5 Payment

Section 7-14.5 is supplemented with the following:

The unit contract price per each for "Hydrant Assembly" shall be full compensation for all costs for labor, material, and equipment to install spool fittings, restraints, thrust blocks, auxiliary gate valve, shackles, tie rods, concrete blocks, painting required for the complete installation of the hydrant assembly as specified, lateral tee and 6" ductile iron watermain to hydrant, hydrant, and blue raised pavement marker.

7-15 SERVICE CONNECTIONS

7-15.1 Description

Section 7-15.1 is supplemented with the following:

This work consists of installing new service connections, pressure reducing valves (PRV), replacing existing services, and abandoning existing water service connections as shown on the Plans or at the direction of the Engineer.

All work is to be in conformance with City standards for water services.

7-15.2 Materials

Section 7-15.2 is supplemented with the following:

All fittings shall be brass. Saddles shall be as shown on the Plans with I.P. standard tapping. Corporation stops shall be Ford F700, or approved equal with inlet I.P. standard thread and outlet thread compatible with Type K copper connection piping, with no special adapters, minimum 150 psi.

Within the right-of-way, service piping shall be copper tubing and shall conform to the requirements of ASTM B88, Type K annealed. All underground fittings shall be flared within the right-of-way.

7-15.3 Construction Requirements

Section 7-15.3 is supplemented with the following:

General

New type K copper tubing shall be installed between the watermain and the meter setter location. The Contractor shall provide and install a new meter, meter setter, and meter box for all service connections, in accordance with the City of Ferndale Standards. All existing water meters, setters, and boxes shall be salvaged by the Contractor and delivered to the City of Ferndale Maintenance Shop.

Service connections shall include connection to the existing service line on the customer side of the meter. The proposed meter and meter setter shall be installed at the correct elevation below subgrade as shown in the plans. If the proposed meter setter is above or below the existing service line on the customer side of the meter, this work shall include all pipe, fittings, materials, tools, and labor to connect the customers' service line to the new setter.

Existing water services shall be abandoned at the existing water main by closing the corporation stop, disjointing the water service pipe from the corporation stop, and removing the existing water service line a minimum of 2 feet from the watermain.

Various items of work in this contract may require disruption of water service to customers on adjacent properties. The Contractor shall keep the service disruptions to an absolute minimum. When more than one item of work requires disruption of the same utility service to the same customer, the Contractor shall schedule the work so that the customer's service is disrupted only once. The Contractor shall be responsible for determining which residents will be affected by shutoffs, and will notify them a minimum of 24 hours in advance. The Contractor shall locate and verify the type of pipe, size, and depth prior to making the connection. Detailed sketches and plans of the connection proposed by the Contractor shall be given to the Engineer not less than one week prior to the expected construction. The City of Ferndale shall be notified not less than two (2) working days prior to connection to existing mains.

Any disrupted services shall be restored before the end of each working day. Overnight disruptions will not be permitted. If, in the opinion of the Engineer, service has not been restored in a satisfactory manner, the Engineer may take whatever action is necessary to restore service. The cost of such action will be deducted from any payments due or coming due the Contractor.

Coordination of Work

The Contractor shall notify the City of Ferndale Public Works Department at 384-4006, 48 hours prior to disconnection of the existing meter. The Contractor shall tag the existing meters to be removed with the corresponding address which is served by that meter and

meter reading at time of removal. Once removed these meters shall be delivered to the City of Ferndale Maintenance Shop.

The Contractor shall coordinate with the City of Ferndale for the collection of the existing meter. The existing water meter shall not be removed and service shall not be interrupted until the new water meter is on hand.

7-15.3(1) Flushing and Disinfection

Section 7-15.3(1) is supplemented with the following:

Service testing shall be done in conjunction with water main testing. An acceptance inspection will be made by the Engineer upon completion of all project work. During the inspection, every service shall be turned on to its full capacity to check flow and guarantee that each service line has been flushed. In no case shall the acceptance inspection be made until all project work is complete. Damage incurred during other construction work on the project shall be corrected by the Contractor prior to acceptance by the Engineer.

The following new Section is added:

7-15.3(2) Adjustments to Finished Grade

Existing water meter and irrigation boxes, which are to remain shall be adjusted to finished grade. This work shall be included in the bid item "Adjustments to Finished Grade."

7-15.4 Measurement

Section 7-15-4 is supplemented with the following:

Pressure Reducing Valves (PRV) will be measured per each of pressure reducing valve installed.

7-15.5 Payment

Section 7-15.5 is supplemented with the following:

The unit contract price per each for "Service Connection, ___ In. Diam." and "Pressure Reducing Valve (PRV)" shall be full pay for all work to install the meter boxes, meter, meter setter, gate valve, service connection, including but not limited to, excavating, tapping the main, laying and jointing the pipe and fittings and appurtenances, backfilling, testing, flushing and disinfection of the service connection, and other appurtenances to the location shown on the plans

7-17 SANITARY SEWERS

7-17.1 Description

(June 10, 2009 R&E GSP)

Section 7-17.1 is supplemented with the following:

Realignment of existing sanitary sewer services may be necessary to allow installation of the new storm drain pipe.

This work also includes the installation of an insulated sanitary sewer on the proposed culvert.

Materials

Section 7-17.2 is supplemented with the following:

All trenches within the roadbed section shall be backfilled with import gravel meeting the requirements of Section 4-02.2.

Measurement

Section 7-17.4 is supplemented with the following:

Measurement for Sanitary Sewer Pipe, as indicated on the Bid Proposal, shall be per linear foot. The following items shall be incidental and included in the unit price per linear foot:

1. Dewatering if required
2. Detectable marking tape
3. Pipe bedding as shown on the Plans
4. Compaction
5. Installation of sanitary sewer pipe
6. Coupling bands, fittings, and associated gaskets
7. Pipe Insulation
8. Connection to existing structures
9. Other work and materials, not specifically identified as being paid elsewhere

Payment

Section 7-17.5 is supplemented with the following:

The unit Contract price per linear foot for sewer pipe of the kind and size specified shall be full pay for connections to existing force mains.

"Bridge Supported D.I. for Sanitary Sewer Pipe, __ In. Diameter", per linear foot.
The unit Contract price per linear foot for sewer pipe of the kind and size specified shall be full pay for furnishing, hauling, and assembling in place the completed installation including all wyes, tees, special fittings, insulation, jacketing, joint materials, fittings, hangers, hanger supports, concrete inserts, saddles, bolts, nuts, bedding and backfill material, and adjustment of inverts to manholes for the completion of the installation to the required lines and grades.

7-18 SIDE SEWERS

7-18.1 Description

Section 7-18.1 is supplemented with the following:

Realignment and repair of the existing sanitary sewer services may be necessary to allow

installation of the new storm drain pipe.

7-18.3(1) General

Connections to the existing sewer main shall not be made without first making the necessary scheduling arrangements with the Engineer in advance. Work shall not be started until all the materials, equipment, and labor necessary to properly complete the work are assembled on the site.

Existing side sewers shall be cut by the Contractor, unless otherwise specified in the Special Conditions. The Contractor shall remove the portions of pipe to provide for the installation of the required fittings at the points of connection. Damage caused by the Contractor's operations to existing joints in piping to remain in-service shall be repaired by the Contractor at no additional expense to the Contracting Agency.

Once work is started on a side sewer, it shall proceed continuously without interruption and as rapidly as possible until completed. No shutoff will be permitted overnight, over weekends, or on holidays.

If the connection to the existing side sewer system involves turning off the side sewer, the Contractor shall be responsible for notifying the residents affected by the shutoff. The Engineer will advise which property owners are to be notified.

The Contractor may be required to perform the connection during times other than normal working hours.

The types of connections for the side sewers are varied. For the installation of these side sewers, the surfaced portion of the roadway shall not be penetrated unless the connection point is directly under it.

7-18.5 Payment

Section 7-18.5 is supplemented with the following:

Potholing required to determine the connection point at the right of way shall be paid under the bid item "Pothole Existing Underground Utility."

DIVISION 8
MISCELLANEOUS CONSTRUCTION

8-01 EROSION CONTROL AND WATER POLLUTION CONROL

8-01.3 Construction Requirements

8-01.3(1) General

Section 8-01.3(1) is supplemented with the following:

The Contractor shall install orange silt fence along the site preservation lines shown in the Plans or as instructed by the Engineer.

The Contractor shall prepare a Stormwater Pollution Prevention (SWPP) Plan in compliance with the most current edition of the Department of Ecology's Stormwater Management Manual for Western Washington, Volume II – Construction Stormwater Pollution Prevention and the NPDES Permit. The Contractor's ESC Lead shall coordinate with the Contracting Agency in preparing the SWPP Plan. The SWPP Plan is to remain onsite throughout the duration of construction.

Wetland and Sensitive Area Protection

The Engineer will designate the vegetation to be saved and protected by a site preservation line, high visibility fencing, or individual flagging.

Existing wetland and other environmentally sensitive areas, where shown in the Plans or designated by the Engineer, shall be saved and protected through the life of the Contract. When applicable, a site preservation line has been established as a boundary between work zones and sensitive environmental areas. This is especially important due to the proximity of the existing sensitive environmental areas (e.g., wetlands, streams and buffers on site).

The Contractor shall install high visibility fence as shown in the Plans or designated by the Engineer in accordance with this section. The areas to be protected include critical environmental areas, buffer zones, and other areas of vegetation to be preserved. The Contractor shall keep areas identified by the site preservation lines free of construction equipment, construction materials, debris, and runoff. No access, to include but not limited to excavation, clearing, staging, or stockpiling shall be performed inside the protected area.

8-01.4 Measurement

Section 8-01.4 is supplemented with the following:

No specific unit of measure shall apply to the lump sum item "ESC Lead."

"Check Dams" shall be measured by the linear foot installed. Wood stakes shall be included in the unit Contract price for Check Dam.

No specific unit of measurement will apply for the lump sum bid item "SWPP Plan

Preparation".

8-01.5 Payment

The first item, "ESC Lead", of Section 8-01.5 is revised to read:

"ESC Lead", lump sum.

The sixth item, "Inlet Protection" of Section 8-01.5 is revised to read:

"Inlet Protection", per each. The unit contract price per each for inlet protection shall include all costs for removal and disposal of accumulated debris, inlet protection maintenance, and inlet protection removal and disposal.

The eighth item, "Stabilized Construction Entrance" of Section 8-01.5 is revised to read:

"Stabilized Construction Entrance", per square yard. The unit contract price per square yard for stabilized construction entrance shall include all costs associated with constructing, operating, maintaining, and removing the stabilized construction entrance.

The eleventh item, "Silt Fence" of Section 8-01.5 is revised to read:

"Silt Fence" and "Orange Silt Fence", per linear foot. The unit contract price per liner foot for silt fence shall include all costs for removal and disposal of accumulated debris, silt fence maintenance, and silt fence removal and disposal.

"Check Dam", per linear foot. The unit Contract price per linear foot for Check Dam shall include all costs for installation, materials, tools, removal and disposal of accumulated debris, Check Dam maintenance, and Check Dam removal and disposal.

"SWPP Plan Preparation", Lump Sum

The lump sum price for SWPP Plan Preparation shall be full compensation for all labor, materials, tools and equipment to satisfactorily complete the work as necessary and defined in the Standard Specifications, these Special Provisions, and the Plans.

8-02 ROADSIDE RESTORATION

8-02.1 Description

Section 8-02.1 is supplemented with the following:

Furnish all labor, materials and equipment necessary for installation of planting and installation of topsoil and soil amendments, including but not limited to the preparation of the ground surface, installation of soil amendments, application of fertilizer, installation of seed, and chemicals as necessary in areas shown on the Plans, as specified in this document, or as directed by the Engineer in accordance with these specifications.

The extent and location of seeding work includes all areas in this project , except new plant

beds and paved areas, which are disturbed by construction, grading, pavement removal, utility installation and any other of the Contractor's operations or as directed by the Engineer in accordance with these specifications.

The Contractor shall provide 48 hours notice to the Engineer when an inspection is desired.

8-02.2 Materials

(February 7, 2008 R&E GSP)

Section 8-02.2 is supplemented with the following:

Topsoil Type A

Topsoil Type A shall be commercially available free draining, fertile, friable sandy loam, and shall supply the following composition requirements: weed and seed free, pH between 5.5 and 7.5, maximum particle size to ½ inch, with 97% to 100% passing the 3/8 inch screen, soluble salts shall not exceed 4/0 mmho/cm, free of clay lumps, litter and toxic matter harmful to plant growth. Components shall conform to the requirements indicated. Mixing of the soil components shall not occur on site.

Composted Mulch

Material shall be derived from aerobic decomposition of recycled plant waste fully composted. Material shall be composted on a paved surface and shall have a moisture content of between 20% and 40%. No visible free water or dust shall be produced when handling the material. Fresh sawdust or fresh wood by products shall not have been added after the composting process has begun. No recycled sanican waste shall be used. Yard waste shall be from permitted composting facilities. Pure organic matter content shall be between 30% and 50% by weight. 100% of composted yard waste shall pass the 7/16 inch screen and a minimum 50% shall bass the ¼" screen. Material shall be maintained at a 15% oxygen level throughout the composting process.

8-02.3 Construction Requirements

8-02.3(1) Responsibility During Construction

Section 8-02.3(1) is supplemented with the following:

The Contractor shall have sole responsibility for the maintenance and appearance of the stormwater pond planting.

8-02.3(4) Topsoil

(March 18, 2010 R&E GSP)

Section 8-02.3, revise the 1st sentence of this Section to read:

Topsoil shall be evenly spread over the specified areas to a depth of four (4) inches or as otherwise directed by the Engineer. The soil shall be cultivated to a depth of 6 inches. After the topsoil has been spread, all large clods, hard lumps, and rocks 3 inches in diameter and larger, and litter shall be raked up, removed, and disposed of by the Contractor. The area shall then be rolled with a landscape roller in at least 1 direction at a velocity not to exceed 2

feet per second. Spread topsoil after subgrade preparation is complete. Topsoil shall not be placed when the ground or topsoil is frozen, inundated with water, or in a condition detrimental to the Work -- Saturated soil is preferred, or in the opinion of the Engineer.

8-02.3(4)A Topsoil Type A

(April 21, 2010 R&E GSP)

Section 8-02.3(4)A is supplemented with the following:

Topsoil Type A shall be used for seeded lawn installation and wetland seed installation. Topsoil Type A used on the pond berm shall be to a depth of one inch.

8-02.3(4)B Topsoil Type B

Section 8-02.3(4)B is supplemented with the following:

Topsoil Type B shall be used for the pond treatments cells.

Required Topsoil Type will be a bioswale sand/loam mix and not packed gravel. The contractor may choose to amend the individual plant holes with soil/compost. If the contractor chooses not to amend the soil pits with a compost material - Compost material will be added to the topsoil and worked in (Mixed in with Topsoil, at a quantity of 4:1 topsoil to compost) prior to planting.

Topsoil and Compost shall be taken from areas designated by the Engineer to the designated depth and stockpiled at locations that will not interfere with the construction of the project, as approved by the Engineer. Areas beyond the slope stakes shall be disturbed as little as possible in the above operations.

When Topsoil Type and Compost is specified, it shall be the Contractor's responsibility to perform the excavation operations in such a manner that sufficient material is set aside to satisfy the needs of the project.

Upon Physical Completion of the Work, Topsoil Type and Compost remaining and not required for use on the project shall be disposed of by the Contractor at no expense to the Contracting Agency in accordance with Section 2-03.3(7) C.

Should a shortage of Topsoil Type and/or Compost occur, and the Contractor has wasted or otherwise disposed of topsoil etc. material, the Contractor shall furnish Topsoil Type etc. at no expense to the Contracting Agency.

8-02.3(5) Planting Area Preparation

Section 8-02.3(5) is supplemented with the following:

The Work involved in preparing planting areas shall be conducted so the flow lines in drainage channels are maintained. Material displaced by the Contractor's operations that interferes with drainage, shall be removed from the channel and disposed of as approved by the Engineer.

Before planting and final grading takes place, the area shall be cultivated when specified in the Plans or the Special Provisions.

The areas shall be brought to a uniform finished grade**,** including the additional topsoil, as required by the grading plans. All excess material and debris, stumps, and rocks larger than 3 inches, shall be removed and disposed of off the project site or as approved by the Engineer.

8-02.3(6) Soil Amendments

Section 8-02.3(6)is supplemented with the following:

Stormwater Pond

Soil amendments if used of the type, quality, and quantities specified shall be applied within planting holes or mixed in to the topsoil matrix as described above. Areas receiving soil amendments shall be bare soil or vegetation free prior to application. Compost used for soil amendments shall be Fine Compost. All soil amendments shall be installed as shown in the Plans within 30 calendar days after delivery to the project site.

8-02.3(7) Layout of Planting

Section 8-02.3(7) is supplemented with the following:

The Contractor shall locate the plants within the appropriate zones at the appropriate spacing and groupings as designated within the plant list as provided in **Plant List Table.1** given below.

Planting Zone	Scientific Name	Common Name	Type	Indicator Status	Size of Plants (Material)	Plants per Group	Planting Density (Spacing)	Proportion of Planting in Strata (%)	Zone Area (sf)	Plant Area (sf)	Distance btwn (centers^2)	Number of Plants
Zone 1: 15,079 sf area *Maximum water depth after plant establishment period 1-foot*	*Veronica americanum*	Marsh speedwell	HE	1	Bare root/plugs	10-15	12" - 18" centers	22	15,079	3,317	1.56	2127
	Oenanthe sarmentosa	Water parsley	HE	1	Bare root/plugs	10-15	12" - 18" centers	22	15,079	3,317	1.56	2127
	Eleocharis palustris	Spike rush	HE	1	Bare root/plugs	10-15	12" - 18" centers	22	15,079	3,317	1.56	2127
	Sagittaria latifolia	Broadleaf arrowhead*	HE	1	Bare root/plugs	10-15	12" - 18" centers	22	15,079	3,317	1.56	2127
	Carex obnupta	Slough sedge	HE	1	Bare root	10-15	12" - 18" centers	22	15,079	3,317	1.56	2127
Zone 2: 33,174 sf *Maximum water depth after plant establishment period 1-2 feet*	*Scirpus microcarpus*	Small Fruited Bulrush	HE	1	Bare root	10-15	12" - 18" centers	36	33,174	11,943	1.56	7656
	Alisma plantago-aquatica	Water plantain	HE	1	Bare root	10-15	12" - 18" centers	36	33,174	11,943	1.56	7656
	Sparganium emersum	Burreed	HE	1	Bare root	10-15	12" - 18" centers	36	33,174	11,943	1.56	7656
Zone 3: 12,063 sf *Maximum water depth after plant establishment period 1-2 feet*	*Scirpus acutus*	hardstem bulrush	HE	1	Bare root	10-15	12" - 18" centers	55	12,063	6635	1.56	4253
	Scirpus validus	softstem bulrush	HE	1	Bare root	10-15	12" - 18" centers	55	12,063	6635	1.56	4253

Plant Totals	**42,109**

LEGEND

Type	**Indicator Status**
T: Tree	1: Obligate / FACW-
S: Shrub	2: FACW / FACW+
HE: Herbaceous	3: FAC- / FAC / FAC+
	4: FACU

* - If availability does not meet the planting specifications, substitutions can be made as mentioned within the planting specifications; and approval from Engineer is required. These may be substituted with Water Parsnip (*Sieum suave*) or Fowl Mannagrass (*Glyceria striata*)

8-02.3(7)A Water Level
Predicted Stabilized Water Level Depths

Zone 1 maximum water depth is 1 ft.
Zone 2 maximum water depth is 2 ft.
Zone 3 maximum water depth is 2.5 ft.

8-02.3(7)B Water Level Measurement

To facilitate correct water level and soil conditions prior to plant installation, contractors should measure the actual water level after pond construction and after placement of the 6 inches of topsoil. During plant installation the soils should not be inundated. There should not be standing water within Zones 1, 2 and 3 during plant installation. However, there should be enough water to irrigate the installed plants during the plant establishment period. Soil saturation is recommended during plant installation.

8-02.3(7)C Irrigation

Irrigation is recommended. The plants require an establishment period prior to full use of the stormwater pond for stormwater treatment purposes.

The Contractor shall be responsible for insuring that an adequate amount of water within the stormwater pond and in all planted areas including the berms and uplands are maintained during plant establishment.

8-02.3(7)D Water Level Observation

After plant installation the permanent water elevation in the stormwater pond should be observed quarterly for approximately one year by both the Engineer and Contractor to ensure that the facility is functioning as designed, and in order to ascertain stabilized conditions within the pond for the planted material.

8-02.3(8) Planting
Section 8-02.3(8) is supplemented with the following:

Planting Stormwater Pond
A one year guarantee of the planted material is required. These guidelines are not meant to be exhaustive but present the typical requirements. 80% survival of planted material after the first and second year is required.

The Engineer will oversee the installation of the plant material.

No plant material shall be planted until it has been inspected and approved for planting by the Engineer. Rejected material shall be removed from the project site immediately. All plants for the project or a sufficient quantity to plant Stormwater Pond, shall be received on site prior to the Engineer beginning inspection of the plants.

Under no circumstances will planting be permitted during unsuitable soil or weather conditions as determined by the Engineer. Unsuitable conditions may include frozen soil, freezing weather, soil inundated more than one inch or what is required for survival of plant type, (saturated soils are recommended during plant installation, as appropriate for plant type), high winds, heavy rains, and high water levels (above what is required for plant type). All planting shall be accomplished during the following periods:

Western Washington[1] **(West of the Cascade Mountain Crest)**
March 1 through May 15
September 1 through October 1

1 Where Contract timing is appropriate, seeding, and fertilizing, shall be accomplished during the fall period listed above. Written permission to seed after October 1 will be given only when Physical Completion of the project is imminent and the environmental conditions are conducive to satisfactory growth.

Plants shall not be placed below the finished grade.

Planting hole sizes for plant material shall be in accordance with the details shown in the Plans, and as provided here:

There should be at least a 6" diameter hole dug/augered to allow for root spread.

Spread the roots out rather than allowing them to be shoved into a small divot. Roots are to be facing down.

Plant material supplied in containers shall not be removed from the containers until the time of planting at the planting location.

Roots of bare root stock shall not be bunched, curled, twisted, or unreasonably bent when placed in the planting hole. Root balls shall be loosened prior to planting. All bare root plant material shall be dormant at the time of planting.

All cuttings shall be planted immediately if buds begin to swell.

All plant wrapping materials including burlap, baskets, pots, string, wire and other such materials shall be removed from the hole when planting plants. The plant material shall be handled in such a manner that the root systems are kept covered and damp at all times.

The root systems of all bare root plant material shall be dipped in a slurry as specified in the Special Provisions immediately prior to planting. The root systems of container plant material shall be moist at the time of planting.

In their final position, all plants shall have their top true root (not adventitious root) no more than 1 inch below the soil surface, no matter where that root was located in the original root ball or container. The backfill material and root ball shall be thoroughly watered on the same day that planting occurs regardless of season.

8-02.3(10) Fertilizers

Section 8-02.3(10) is supplemented with the following:

Are prohibited within the stormwater pond.

8-02.3(11) Bark or Wood Chip Mulch

Section 8-02.3(11) is supplemented with the following:

Wood Cellulose mulch shall be applied at a rate of 2,000 pounds per acre. To improve germination of seeds, this rate may be increased with approval by the Engineer.

Bark or Wood Chip Mulch Is prohibited within the stormwater pond

8-02.3(13) Plant Establishment

Section 8-02.3(13) is supplemented with the following:

Payment for water used to water in plants, or hand watering of plant material is the responsibility of the Contractor during the first-year plant establishment period. Subsequent year plant establishment periods, when included in the Contract, shall begin immediately at the completion of the preceding year's plant establishment period. Each subsequent year plant establishment period shall be 1 full calendar year in duration.

8-02.3(16) Lawn Installation

(April 22, 2010 R&E GSP)

Section 8-02.3(16) is supplemented with the following:

The Contractor shall perform lawn installation in accordance with the following: Immediately prior to seeded lawn installation and wetland seed installation, a nominal four (4) inch depth (one inch depth on pond berm) of "Topsoil Type A" shall be placed in the areas requiring seeded lawn installation and wetland seed installation or as directed by the Engineer. Peat moss mulch shall be applied to a depth of 1/4 inch over newly seeded lawn and wetland seed installation area. The area shall then be rolled with a landscape roller in at least 1 direction at a velocity not to exceed 2 feet per second. Alternatively, a seed of fabric mulch mat shall be installed as approved by the Engineer.

"Seeded Lawn Installation" and "Wetland Seed Installation" will be paid where construction, filling excavation, and grading have disturbed unimproved areas. This will generally consist of areas behind the sidewalk where no established lawns or landscaping currently exist. "Seeded Lawn Installation" and "Wetland Seed Installation" shall be placed on all exposed soil disturbed by construction or any area directed by Engineer. "Seeded Lawn Installation" and "Wetland Seed Installation" shall also be placed on all fill and cut areas outside roadway surface width, within the project limits.

The intent of seeding is to produce viable roadside vegetation toward the end of preventing erosion. If seeding has not germinated satisfactorily at the time of final acceptance, this work will be considered defective according to Section 1-05.7 of the Standard Specifications. The

Engineer may require the Contractor to post security equal to 200% of the amount bid for seeding in order to secure performance of this germination specification. This security shall be in a form acceptable to the City and may be required prior to release of retainage of this project. Said security shall not be released until satisfactory germination has occurred. Any erosion, which in the opinion of the Engineer, occurs directly as a result of insufficient seed germination shall be repaired by the Contractor at no additional expense to the City. Any such repairs shall be completed prior to project acceptance or release of security as identified herein. Satisfactory germination is defined as a minimum of 300 stems per square foot. Any area in which two consecutive one square foot plots sampled fall below this standard will be considered defective and shall be corrected by the Contractor.

The dates for seeding outlined in Section 8-02.3(16)A of the Standard Specifications will be considered guidelines rather than requirements for this item. The Contractor shall use professional judgment and consider factors such as weather and soil moisture to obtain satisfactory germination."

Immediately after hydroseeding, the Contractor shall remove hydroseed overspray from all features other than the intended seeding area."

Binding Agents

Tacking agents and soil binders shall be provided in accordance with Section 8-01.3(2)E.

8-02.4 Measurement

(February 7, 2008 R&E GSP)

Section 8-02.4, is supplemented with the following:

No separate measurement will be made for composted mulch, water and fertilizer, and binding agent, where applied for "Seeded Lawn Installation" and "Wetland Seed Installation".

(March 18, 2010 R&E GSP)

Section 8-02.4, is supplemented with the following:

Work performed under the item "Landscape Restoration" shall be measured in accordance with Section 1-09.6 Force Account.

8-02.5 Payment

(February 7, 2008 R&E GSP)

Section 8-02.5 is supplemented with the following:

The unit contract price per square yard for "Seeded Lawn Installation" and "Wetland Seed Installation" shall be full compensation for all labor, materials (topsoil, fertilizer, mulch, soil amendments, binding agents, and water), tools and equipment necessary to perform the work as specified herein. All other items in this Section, not specified on the Bid Proposal form shall be included in the cost of "Seeded Lawn Installation". The unit price shall be full

compensation for multiple applications in areas required by the Engineer as the work progresses.

Payment for "Landscape Restoration" shall be on a force account basis as per Section 1-09. For the purpose of providing a common proposal for all bidders, and for that purpose only, the Contracting Agency has established the amount of force account for this item and has entered the amount in the bid proposal to become a part of the total bid by the Contractor.

8-04 CURBS, GUTTERS, AND SPILLWAYS

8-04.3 Construction Requirements

8-04.3(1) Cement Concrete Curbs, Gutters, and Spillways

Section 8-04.3(1) is supplemented with the following:

Depressed curb driveways and wheel chair ramp openings shall be provided at such locations as directed by the Engineer or shown on the Plans. All curved sections with a radius less than 500 feet shall be formed in arc sections to match the radii detailed in the Plans. The Contractor shall provide temporary ramps over new concrete curbing at driveway locations.

Concrete placement shall be accomplished with line and grade control such that a 10-foot long straight edge placed on the concrete surface in the gutter or against the face of the curb shows no variance greater than 1/8 inch in grade or 1/4 inch on line, except at a designed angle point. Under no circumstances shall variances be allowed that cause drainage away from the catch basin or other drainage structures.

Curb drains shall be constructed of 2-inch PVC pipe or other material subject to approval of the Engineer, cut to length to pass from the back of curb through the curb to the face of the curb at the gutter line. Spacing will be maximum of 50 feet, center to center, and/or each side of the driveways and at such locations as designated by the Engineer or as shown on the Plans.

The Contractor shall delay forming and pouring curbs and gutters at the locations where Puget Sound Energy's, Frontier's, and Comcast's existing facilities are located. The Contractor shall pour the curbs and gutters after Puget Sound Energy, Frontier, and Comcast have removed their facilities.

The first paragraph is revised to read:

Cement concrete curb, curb and gutter, gutter, and spillway shall be constructed with air entrained concrete Class 3000 conforming to the requirement of Section 6-02 except at driveway entrances. Cement concrete curb or curb and gutter along the full width of a driveway entrance shall be constructed with air entrained concrete Class 4000 conforming to the requirements of Section 6-02.

The fourth paragraph is revised to read:

Expansion joints in the curb or curb and gutter shall be spaced at 15-foot intervals, the beginning and ends of curb returns, drainage structures, bridges, and cold joints with existing curbs and gutters. The expansion joint shall be filled to full cross-section with 3/8-inch premolded joint filler. When curb or curb and gutter is placed adjacent to Portland Cement Concrete Pavement, a 1/4-inch thick, 6-inch deep premolded joint filler shall be installed between the two vertical surfaces to prevent cracking. When noted in the Plans, the Contractor shall install the catch basin gutter pan at drainage structures abutting the curb and gutter.

8-04.5 Payment

Section 8-04.5, is supplemented with the following:

Payment for cement concrete curb and gutter shall be at the unit price bid per lineal foot and shall be full compensation for all labor, equipment, and materials necessary to construct this item, as specified in place, including curb drains, depressed curb driveways and wheel chair ramp openings. This item includes all excavation, grading, and placement of backfill necessary to construct cement concrete curb and gutter which are not identified as part of other bid items.

8-06 CEMENT CONCRETE DRIVEWAY ENTRANCES

8-06.3 Construction Requirements

(February 8, 2008 R&E GSP)

Section 8-06.3 is supplemented with the following:

Driveways shall meet the following minimum requirements.

1. 3/8-inch premolded joint filler shall be placed at 20 foot centers, maximum and shall be matched to curb and gutter joints.
2. 'V' grooves shall be scored ¾-inch deep at five-foot intervals.
3. Driveway sections shall be brush finished longitudinally with a fiber brush.
4. For driveways wider than 20 feet, place ¾-inch deep 'V' groove at the mid-point. For driveways greater than 30 feet wide, place ¾-inch deep 'V' groove at one-third points.
5. All joints shall be cleaned and edged.
6. The back of some driveways may be depressed at the direction of the Engineer.
7. Driveways shall have a uniform thickness of 8-inches.
8. Six (6) inches of compacted gravel base shall be placed beneath driveways.

STA 13+75 Driveway

The Contractor shall texture the driveway by combing the final surface as shown on the Plans. Made of a single row of metal tines, the comb shall leave striations in the fresh concrete approximately 3/16 inch deep by ⅛ inch wide and spaced approximately ½ inch apart. The Engineer will decide actual depths at the site. (If the comb has not been approved, the Contractor shall obtain the Engineer's approval by demonstrating it on a test section.)

The Contractor may operate the combs manually or mechanically, either singly or with

several placed end to end. The timing and method used shall produce the required texture without displacing larger particles of aggregate.

8-06.4 Measurement

Section 8-06.4 is supplemented with the following:

Texturing of the STA 13+75 Driveway shall not be measured. This work shall be incidental to the various bid items.

8-09 RAISED PAVEMENT MARKERS

8-09.1 Description

Section 8-09.1 is supplemented with the following:

This work includes the installation of Blue Raised Pavement Markers at the location indicated on the Plans and in the Specifications.

8-09.3 Construction Requirements

Section 8-09.3 is supplemented with the following:

A blue reflector, shall be installed 1 foot off the road centerline towards the hydrant.

8-09.4 Measurement

Section 8-09.4 is supplemented with the following:

Blue raised pavement markers shall not be measured and shall be considered incidental to the bid item "Hydrant Assembly" per Section 7-14.

8-12 CHAIN LINK FENCE AND WIRE FENCE

8-12.1 Description

Section 8-12.1 is supplemented with the following:

This work shall consist or removing and terminating existing fences as shown on the Plans.

This work also consists of furnishing all materials, labor, tools, equipment, services and incidentals necessary to erect, maintain, dismantle, and remove temporary fencing on the north and south side of the proposed culvert after the culvert is installed.

8-12.2 Materials

Section 8-12.2 is supplemented with the following:

Temporary chain link fencing shall be new materials or previously used salvaged chain link fencing in good condition. Temporary chain link fencing shall be 6 feet high. Post shall be galvanized steel pipe of diameter to provide rigidity. Post shall be suitable for setting in concrete footings, anchoring with base plates, or inserting in precast concrete blocks. Fence fabric shall be woven galvanized steel wire mesh. Fence shall be provided in continuous lengths to be wire tied to fence posts or prefabricated into modular pipe-framed fence panels. Gates shall be of same material as used for fencing.

8-12.3 Construction Requirements

Section 8-12.3 is supplemented with the following:

5 days prior to the installation of temporary fencing, the Contractor shall provide a drawing indicating layout of temporary fencing, existing pavement and roads, access to fire hydrants and hose connections, and other site specific conditions. The Contractor shall prepare the drawing after site observation and verification of existing conditions.

Temporary fencing shall not deter or hinder access to existing hose connections and fire hydrants. Temporary fencing shall maintain 3 feet diameter clear space around fire hydrants. Where fire hydrant or hose connection is blocked by fencing, Contractor shall provide access gate.

Chain link posts shall be spaced at maximum 10 feet on center. Posts over pavement and gravel shall use steel post plates or precast concrete blocks. Gate posts shall use bracing or concrete footings to provide rigidity for accommodating size of gate. Fence fabric shall be securely attached to posts. Gates shall be installed with the required hardware.

Contractor shall maintain fencing in good condition. If fencing is damaged, Contractor shall immediately repair. The Contractor shall remove temporary fencing upon completion of Work or when no longer required for security or control. The Contractor shall repair damage caused by installation of temporary fencing.

8-12.3(1) Chain Link Fence and Gates

8-12.3(1)A Posts

After removing and terminating the existing fence, corner posts similar to the existing posts shall be placed at each termination point.

8-12.4 Measurement

Section 8-12.4 is supplemented with the following:

Access Control Pipe Gate will be measured per each.

No specific unit of measurement shall apply to gates, posts, post plates, precast concrete blocks, hardware, and other items required for temporary fencing.

8-12.5 Payment

Section 8-12.5 is supplemented with the following:

Payment for removal and termination of existing fence, and installation of similar corner post, shall be included in the lump sum price for "Removal of Structures and Obstructions".

"Access Control Pipe Gate", per each

The unit Contract price per each for "Access Control Pipe Gate" shall be full compensation for all labor, materials including post, excavation, concrete and appurtenances required to install Access Control Pipe Gate.

"Temporary Fencing", per linear foot.

Payment for "Temporary Fencing", per linear foot, shall include but is not limited to all labor, materials including gates, posts, post plates, precast concrete blocks, hardware, maintenance, repair, and removal required for temporary fencing at the location shown on the Plans or as directed by the Engineer.

8-14 CEMENT CONCRETE SIDEWALKS

8-14.1 Description

Section 8-14.1 is supplemented with the following:

This work shall consist of constructing cement concrete sidewalks and sidewalk ramps, in accordance with details shown in the Plans and these Specifications and in conformity to lines and grades shown in the Plans or as established by the Engineer. Replacement or matching to existing driveways shall be completed with a similar material and finish as that which exists or as directed by the Engineer.

8-14.3 Construction Requirements

Section 8-14.3 is supplemented with the following:

The Contractor shall delay forming and pouring concrete sidewalk or sidewalk ramps at the locations where Puget Sound Energy's and Frontier's existing facilities are located. The Contractor shall pour the sidewalk and sidewalk ramps after Puget Sound Energy and Frontier have removed their facilities.

Sidewalks shall meet the following minimum requirements.

1. Sidewalks shall have a uniform thickness of 4-inches.
2. All curved sections shall be formed in arc sections to match the radii detailed in the Plans
3. 3/8-inch through joints shall be placed 20 feet center to center, and shall be matched to curb and gutter joints.
4. "V" grooves shall be scored 3/4-inch deep at five-foot intervals.
5. All joints shall be cleaned and edged.
6. Flag sleeves spacing shall be 100 feet, center to center.
7. The Contractor shall provide temporary ramps over new concrete curbing at driveway

locations.

8. Two (2) inches of washed rock shall be placed beneath sidewalks. Washed rock shall conform to Section 9-03.12(5).

8-14.3(4) Curing

Section 8-14.3(4) is supplemented with the following:

It shall be the Contractor's responsibility to protect curing concrete until it is set to prevent vandalism. Any repairs needed to correct vandalism during the initial set period, including full replacement of the damaged panel, shall be at the expense of the Contractor and subject to approval of the Engineer.

8-14.4 Measurement

Section 8-14.4 is supplemented with the following:

Cement concrete sidewalk ramps constructed where the sidewalk ends and matches the proposed HMA shall be measured under the bid item "Cement Concrete Sidewalk".

Cement concrete sidewalk thickened edge will be measured by the square yard of finished surface and will not include the surface area of the curb ramps.

Cast in place (CIP) monolithic wall cap and sidewalk will be measured by the square yard of finished surface and will not include the surface area of the curb ramps.

8-14.5 Payment

Section 8-14.5 is supplemented with the following:

Payment for "Cement Concrete Sidewalk", "Cement Concrete Sidewalk Thickened Edge" shall be at the unit price bid per square yard of cement concrete in place and shall be full compensation for all labor, equipment, and material necessary to construct this item in place, including driveway sections and repair sections, as specified including leveling and grading subgrade. Washed rock, and cement concrete pedestrian curb, shall be considered incidental to this bid item

Payment for "Cast in place (CIP) Monolithic Wall Cap and Sidewalk" shall be at the unit price bid per square yard of cement concrete in place and shall be full compensation for all labor, equipment, and material necessary to construct this item in place, closure pour, reinforcing steel, as specified including leveling and grading subgrade. Washed rock shall be considered incidental to this bid item

Cement concrete sidewalk ramps constructed where the sidewalk ends and matches the proposed HMA shall be paid under the bid item "Cement Concrete Sidewalk".

8-18 MAILBOX SUPPORT

8-18.3 Construction Requirements

Section 8-18.3 is supplemented with the following:

The contractor shall salvage existing mailboxes for use on the new mailbox supports. All relocated mailboxes shall have new mailbox supports, Type 1 or Type 2 in accordance with the Standard Plans unless otherwise noted.

The contractor shall maintain temporary mailboxes and mailbox supports as necessary during construction to ensure that mail delivery is uninterrupted during the duration of the project. Coordination with the United States Postal Service and the property owner or tenant will be the responsibility of the Contractor.

This work also consists of supplying and installing a foundation for an existing cluster mailbox at the location shown on the plans. The foundations shall be 2 feet square, 12" thick, 4000 psi reinforced cement concrete with anchor bolts to match existing.

8-18.4 Measurement

Section 8-18.4 is supplemented with the following:

Relocate Existing Cluster Mailbox Including Foundation will be measured by the unit for each.

8-18.5 Payment

Section 8-18.5 is supplemented with the following:

Payment for "Relocate Existing Cluster Mailbox Including Foundation" shall be per each and shall include wedge bolt installation, relocation of existing cluster mailbox, and removal of existing foundation.

All costs for temporary mailboxes, temporary mailbox supports and salvage and relocation of existing mailboxes shall be included in and incidental to the unit bid items for mailbox supports as indicated on the bid proposal form.

ILLUMINATION, TRAFFIC SIGNAL SYSTEMS, AND ELECTRICAL

Description

Section 8-20.1 is supplemented with the following:

The work also includes relocating existing lighted sign located at approximate STA 19+90, 29'RT

Construction Requirements

Section 8-20.3 is supplemented with the following:

General

Section 8-20.3(1) is supplemented with the following:

The Contractor shall be fully responsible for providing all electrical equipment necessary to install the service conduit and conductors at the relocated lighted sign location, including conduit risers, stand-off brackets, clamps and conductors. The Contractor shall install necessary conduit and hardware for the lighted sign relocation. The Contractor shall also be responsible for obtaining an electrical permit and approval from L&I for the electrical service, including the cost of the permit.

Payment

Section 8-20.5 is supplemented with the following:

"Lighted Sign Relocate", by for account as provided in Section 1-09.6.
To provide a common proposal for all bidders, the Contracting Agency has entered and amount in the proposal to become a part of the Contractor's total bid.

8-21 PERMANENT SIGNING

8-21.2 Materials

Section 8-21.2 is supplemented with the following:

Permanent signs shall be mounted on Type ST-2 Sign Supports.

8-21.3 Construction Requirements

8-21.3(4) Sign Removal

Section 8-21.3(4) is supplemented with the following:

All signs removed and not relocated shall be salvaged without damage and delivered to the City of Ferndale shop yard located on Legoe Street. The contractor shall take care to salvage all signs, posts and concrete sign post bases or sleeves.

Delivery shall occur during the hours of 7:00 a.m. to 3:30 p.m. Monday thru Friday. Five days written advance notice shall be delivered to the Engineer prior to delivery. Material will not be accepted without the required advance notice.

Equipment damaged during removal or delivery shall be repaired or replaced to the Engineer's satisfaction at no cost to the Contracting Agency.

The Contractor shall be responsible for unloading the equipment where directed by the Engineer at the delivery site.

8-21.5 Payment

Section 8-21.5 is supplemented with the following:

The lump sum price in the Proposal will be full compensation for the costs of all labor, tools, equipment, and materials necessary or incidental to provide all signs, supports, and mounting hardware.

8-22 PAVEMENT MARKING

8-22.1 Description

Section 8-22.1 is supplemented with the following:

Also included in this item is the complete removal of existing and temporary pavement markings that will conflict with the new channelization. This work shall be incidental to the various bid items of the Contract, and no additional compensation will be made.

8-22.2 Materials

Section 8-22.2 is supplemented with the following:

In accordance with Section 8-22.2 of the Standard Specifications, the plastic material used to form pavement markings shall be Type A – liquid hot applied thermoplastic.

8-22.3 Construction Requirements

(February 11, 2008 R&E GSP)

Section 8-22.3 is supplemented with the following:

Pavement markings shall be applied with appropriate templates to avoid non-uniform edges and unwanted drippings. Any such non-conforming pavement markings will be removed and replaced at the Contractors expense.

8-22.3(1) Preliminary Spotting

Section 8-22.3(1) is supplemented with the following:

The Contractor shall notify the Engineer three (3) working days in advance of scheduled preliminary spotting.

8-22.3(6) Removal of Pavement Markings

Section 8-22.3(6) is supplemented with the following:

If the Engineer determines pavement markings on Imhoff Road have been damaged as a result of pond construction work, the pavement markings to be removed shall be obliterated until blemishes caused by the pavement marking removal conform to the coloration of the adjacent pavement. Replacement of damaged Imhoff Road pavement markings will be measured and paid under the paint line bid item.

8-23 TEMPORARY PAVEMENT MARKINGS

8-23.1 Description

Section 8-23.1 is supplemented with the following:

The temporary centerline striping shall be 1-foot of stripe for every 25-feet of roadway. Temporary marking will be incidental to the bid proposal item for HMA in accordance with Section 5-04.

8-24 ROCK AND GRAVITY BLOCK WALL AND GABION CRIBBING

8-24.1 Description

Section 8-24.1 is supplemented with the following:

The work shall consist of furnishing, assembling, and installing rock filled wire mesh gabion mattresses in accordance with the Plans, Special Provisions, these Specifications, or as designated by the Engineer.

8-24.3 Construction Requirements

8-24.3(3)E Filling Baskets

Section 8-24.3(3)E is supplemented with the following:

Gabion Mattresses

After adjacent empty wire gabion units are set to line and grade and common sides properly connected, they shall be placed in straight-line to gain a uniform alignment. Staking of the gabions may be done to maintain the established proper alignment prior to the placement of rock. No temporary stakes shall be laced through geotextile material. Pre-formed stiffeners or connecting lacing wire shall be attached during the filling operation to preserve the strength and shape of the structure.

Internal connecting cross-tie wires shall be placed in each unrestrained gabion cell greater than 18 inches in height, including gabion cells left temporarily unrestrained. Two internal connecting wires shall be placed concurrently with rock placement, at each 12-inch interval depth.

In welded mesh gabions these crossties or stiffeners will be placed across the corners of the gabions (at 12 inches from the corners) providing diagonal bracing. Lacing wire or preformed wire stiffeners may be used.

The gabions shall be carefully filled with rock, either by machine or hand methods, ensuring alignment, avoiding bulges, and providing a compact mass that minimizes voids. At no point in the filling process may rock be mechanically placed from a height of over 36" from machine to fill area. Machine placement will require supplementing with handwork to ensure the desired results. The cells in any row shall be filled in stages so that the depth of rock placed in any one cell does not exceed the depth of rock in any adjoining cell by more than 12 inches. Along the exposed faces, the outer layer of stone shall be carefully placed and arranged by hand to ensure a neat, compact placement with a uniform appearance.

The last layer of rock shall be uniformly leveled to the top edges of the gabions. Lids shall be placed over the rock filling using only approved lid closing tools as necessary. The use of

crowbars or other single point leverage bars for lid closing is prohibited due to the potential for damage to the baskets.

The gabion lid shall then be secured to the sides, ends, and diaphragms with spiral binders or lacing wire wrapped with alternating single and double half-hitches in the mesh openings.

Any damage to the wire or coatings during assembly, placement and filling shall be repaired promptly in accordance with the manufacturer's recommendations or the units shall be replaced with undamaged gabion baskets.

8-24.3(3)G Gabion Cribbing Erection

Section 8-24.3(3)G is supplemented with the following:

Gabion Mattresses

Rotate the gabion panels into position and join the vertical edges with fasteners for gabion assembly. Where lacing wire is used, wrap the wire with alternating single and double half hitches at intervals between four (4) to five (5) inches. Where spiral fasteners are used, one loop through each mesh opening for gabion mesh (3"x3") or one loop every other mesh for gabion mattress (1.5"x3") with ends crimped to secure the spirals in place. Use the same fastening procedures to install interior diaphragms where they are required.

Interior diaphragms will be required where any inside dimension exceeds three (3) feet from gabion baskets thicker than 12". Diaphragms will be installed to assure that no open intervals are present that exceeds three (3) feet. For baskets 12" or less rectangular cells are allowed with dimensions 36" in one direction and not to exceed 72" in the perpendicular direction.

Placement. Place the empty gabions on the foundation and interconnect the adjacent gabions along the top, bottom, and vertical edges using lacing wire or spirals. Wrap the wire with alternating single and double half hitches at intervals between four (4) to six (6) inches. Spirals are screwed down at the connecting edges then each end of the spiral is crimped to secure it in place. Lacing may be used as needed to supplement the interconnection of welded mesh gabions, and the closing lids.

Interconnect each layer of gabions to the underlying layer of gabions along the front, back, and sides. Stagger the vertical joints between the gabions of adjacent rows and layers by at least one-half of a cell length.

8-24.4 Measurement

Section 8-24.4 is supplemented with the following:

Gabion Mattresses will be measured by the calculated neat line volume of gabion mattress in place, using the manufacturer's stated dimensions.

8-24.5 Payment

Payment will be made in accordance with Section 1-04.1 for each of the following Bid items that are included in the Proposal:

"Gabion Mattresses", per cubic yard.

The following new Section is created:

8-30 POTHOLE EXISTING UNDERGROUND UTILITY

8-30.1 Description

When directed by the Engineer or shown on the Plans, this work shall consist of potholing existing underground utilities. The Contractor shall perform utility investigations or coordinate with utility companies as required. At the direction of the Engineer, the Contractor shall perform exploratory excavations or provide hand potholing as required to collect as-built utility information. The Contractor shall verify the depth and location of existing underground utilities. The Contractor shall immediately notify the Engineer if field conditions differ from that shown on the Plans. The Contractor shall give the owner advance notice of four (4) working days, prior to conducting such investigations.

8-30.4 Measurement

Measurement for potholing existing underground utilities will be by the unit for each pothole.

8-30.5 Payment

Payment will be made in accordance with Section 1-04.1, for the following bid items:

"Pothole Existing Underground Utility", per each.

The unit contract price per each for "Pothole Existing Underground Utility" shall be full compensation for all equipment, labor, and materials to locate the existing utility, verify the utilities' vertical and horizontal location, and restoring the disturbed area.

The following new Section is created:

8-31 REPAIR EXISTING PUBLIC AND PRIVATE FACILITIES

8-31.1 Description

This work shall consist of the repair of existing public and private facilities, and the correction, repair, removal, or construction of items as directed by the Engineer. This shall not exempt the contractor from protecting known existing facilities, or from the responsibility for repair of such known existing facilities.

8-31.3 Construction Requirements

The contractor shall obtain written or verbal approval from the Engineer, prior to proceeding with any repair of existing or private facilities. Work performed without approval from the Engineer will not be compensated.

The Contractor and the Contracting Agencies' representative or Engineer shall reconcile the hours of work for labor and equipment on a daily basis for the purpose of tracking all work under this item. The Contractor shall supply the Engineer with material invoices for all materials incorporated into this work in a timely manner. Invoices shall be original or copies of original invoices from the material supplier.

8-31.4 Measurement

Work performed under the item "Repair Existing Public and Private Facilities" shall be measured in accordance with Section 1-09.6 Force Account.

8-31.5 Payment

Payment for the item "Repair Existing Public and Private Facilities" shall be full compensation for all labor, tools, equipment, materials and subcontractor work needed to complete individual items of work as directed by the engineer. This item shall be paid in accordance with Section 1-09.6 Force Account.

The following new Section is created:

8-32 STREAMBED GRAVEL INSTALLATION

8-32.1 Description

This work consists of installation of all streambed gravel (streambed aggregate mix) in the stream channel and the culvert.

8-32.2 Materials

Materials shall meet the requirements of the following sections:

Streambed Aggregate Mix	9-03.11
Streambed Boulders	9-03.11(3)

8-32.3 Construction Requirements

Before placing streambed gravel, the Contractor shall perform the stream grading as required.

Streambed gravel shall be installed to the extents shown on the plans. The finished grade of the streambed gravel shall match the final streambed grading elevations shown on the plans.

Placement of streambed gravel shall be done before the final grading. (Note: Depending on the construction sequence of the culvert, there may be limited vertical clearance between the culvert bed and the top inside face of the culvert structure for installation of the streambed gravel.

Streambed boulders shall located where indicated on the plan. The contractor shall mark the location of each streambed boulder and obtain engineers approval prior to placement.

8-32.4 Measurement

"Streambed Aggregate Mix" and "Streambed Boulders" will be measured by the cubic yard of streambed gravel and streambed boulders actually placed.

8-32.5 Payment

Payment shall include all labor and materials for furnishing, hauling, and placing streambed gravel and streambed boulders in accordance with the plans and specifications.

"Streambed Aggregate Mix", per cubic yard.
The contract unit price for "Streambed Gravel" shall be full compensation for all labor, materials, and equipment necessary to complete the work as specified, including any necessary grading required to place material, to the satisfaction of the engineer.

"Streambed Boulder", per cubic yard.
The contract unit price for "Streambed Boulder" shall be full compensation for all labor, materials, and equipment necessary to complete the work as specified, including any necessary grading required to place material, to the satisfaction of the Engineer.

The following new Section is created:

8-33 TEMPORARY STREAM BYPASS SYSTEM

8-33.1 Description

This work consists of installation of gravel bag berms, temporary bypass pipe, and miscellaneous appurtenances to isolate the stream banks during in-channel grading and excavation. This work shall also consist of the disposal of all material regardless of its nature or type.

8-33.2 Materials

Materials shall meet the requirements of the following sections:

Clear Plastic Covering	9-14.5(3)
Streambed Gravel	9-03.11
Gravel Bags	9-37
Fish Screen	9-38

8-33.3 Construction Requirements

8-33.3(1) General

The Contractor shall provide, install, and maintain the temporary stream bypass system as shown on the plans. Sediment must not be conveyed downstream during the construction period. The bypass pipe shall meet the size and material requirements shown on the plans. The bypass system and any dewatering measures required must be in operation prior to any work done within the stream channel. The bypass pipe shall outlet to a sediment mat to avoid erosion of the streambed.

Fish Removal
The Contractor shall provide for and coordinate with an experienced, local fisheries Biologist for fish removal of the stream reach being isolated by the temporary stream bypass system. The fisheries Biologist shall perform the following tasks:

1. Fish shall be removed from the stream reach to be diverted by first installing fish screens upstream and downstream of the in-water work area.

2. During dewatering of the reach, fish stranded in remaining pools shall be removed with dip nets and if necessary, by conducting four-pass electrofishing. If Chinook are found during the fish removal activities, electrofishing should cease immediately. Electrofishing must be conducted according to the NMFS (2000) Guidelines for Electrofishing Waters Containing Salmonids Listed Under the Endangered Species Act.

3. Upon removal, fish should be transported in clean buckets half-filled with stream water and immediately reintroduced into the stream downstream of the project site. Fish transportation equipment should be ready and on the job site in advance.

The temporary stream bypass system shall be relocated as required to allow installation of the culvert, to vegetate disturbed areas, and for landscape installation and restoration. See the construction drawings for recommended stream bypass sequencing.

See the Hydraulic Project Approval (HPA) included in the Appendix of this specification for additional information on the temporary stream bypass requirements.

8-33.3(2) Emergency Procedures

The Contractor shall provide pumps, generators, hoses, and personnel as backup to the bypass piping in the event the piping becomes non-operational pumps may be required during construction. Pumps shall be continuously monitored at night and during no-working hours in the event of a power failure.

Emergency bypass pump intake shall be screened in order to protect juvenile fish. The area of the screen shall be a minium of seven (7) square feet and be fully submerged. Screen types shall be of the following:

Perforated Plate
0.0938 in maximum opening diameter or maximum slot width.
Profile Bar
0.069 inch maximum width opening.
Woven Wire
0.087 inch maximum in the narrowest direction.

The Contractor shall inspect and remove any debris accumulated on the face of the screen.

8-33.3(3) Alternate Temporary Stream Bypass Plan

The Contractor may submit an alternate temporary stream bypass plan to the engineer for approval. The plan must include all elements for isolating the stream banks during in-channel grading and excavation. The alternate temporary stream bypass plan must be prepared and stamped by a licensed engineer.

8-33.3(3) Final Temporary Stream Bypass Removal

The final removal of the temporary stream shall be staged such that flow is metered into the constructed stream channel. Metering shall be performed such that one-quarter of the existing flow is released into the stream channel for 24-hours. Subsequent metering in one-quarter of total flow increments over 24-hour periods shall be performed up to full channel flow.

8-33.4 Measurement

No unit of measure shall apply to the lump sum price for Temporary Stream Bypass System. will all be paid by lump sum. All costs associated with installation of the temporary stream bypass system including, but not limited to all HPA requirements, fish nets, fish screens, sediment mats, fish removal, bypass piping and pumps and all related work required to safely bypass stream flows, shall be included in the lump sum contract item.

8-33.5 Payment

"Temporary Stream Bypass System", per Lump Sum.
The lump sum price for "Temporary Stream Bypass System" shall be full compensation for furnishing all labor, materials, tools, and equipment necessary or incidental to furnish, install, maintain, remove, and disposal of all materials, including all costs associated with HPA requirements, fish nets, fish screens, sediment mats, fish removal, bypass piping and pumps and all related work required to safely bypass stream flows.

DIVISION 9
MATERIALS

9-03 AGGREGATES

9-03.8 Aggregates for Hot Mix Asphalt

9-03.8(2) HMA Test Requirements
(March 10, 2010 APWA GSP)

Section 9-03.8(2) is supplemented with the following:

ESAL's
The number of ESAL's for the design and acceptance of the HMA shall be 4.4 million.

9-03.8(7) HMA Tolerances and Adjustments
(March 10, 2010 APWA GSP)

Delete Item 1 and replace it with the following:

1. **Job Mix Formula Tolerances**. After the JMF is determined as required in 5-04.3(7)A, the constituents of the mixture at the time of acceptance shall conform to the following tolerances:

	Nonstatistical Evaluation	**Commercial Evaluation**
Aggregate, percent passing		
1", ¾", ½", and 3/8" sieves	±6%	±8%
U.S. No. 4 sieve	±6%	±8%
U.S. No. 8 sieve	±6%	±8%
U.S. No. 200 sieve	±2.0%	±3.0%
Asphalt Binder	±0.5%	±0.7%

These tolerance limits constitute the allowable limits as described in Section 1-06.2. The tolerance limit for aggregate shall not exceed the limits of the control points section, except the tolerance limits for sieves designated as 100% passing will be 99-100. The tolerance limits on sieves shall only apply to sieves with control points.

9-03.10 Aggregate for Gravel Base
(December 28, 2009 R&E GSP)

Section 9-03.10 is revised to read:

Gravel base shall consist of granular material, either naturally occurring or processed. It shall be essentially free from various types of wood waste or other extraneous or objectionable materials. It shall have such characteristics of size and shape that it will compact readily and shall meet the following requirements.

Stabilometer "R" Value	72 min.
Swell pressure	0.3 psi max.

The maximum particle size shall not exceed ½ of the depth of the layer being placed.
Gravel base shall meet the following requirements for grading and quality when placed in hauling vehicles for delivery to the roadway or during manufacture and placement into a temporary stockpile. The exact point of acceptance will be determined by the Engineer.

Sieve Size	Percent Passing
4" square	100
1-1/2" square	70-100
1/2" square	35-80
U.S. No. 4	15-50
U.S. No. 40	20 max
U.S. No. 200	5.0 max

Sand Equivalent shall be 40 min.

All percentages are by weight.
Gravel base material retained on a No. 4 sieve shall contain not more than 0.20 percent by weight of wood waste.

9-03.11 Streambed Aggregates
(March 19, 2012 R&E GSP)
Section 9-03.11 is supplemented with the following:

"Streambed Aggregate Mix" shall conform to the following gradings and mix proportions:

Streambed Aggregate	Percent of "Streambed Aggregate Mix" by Mass
9-03.11(1) Streambed Sediment	50
9-03.11(2) Streambed Cobbles (12" Cobbles)	40
9-03.11(3) Streambed Boulders (One Man)	10

The grading of the Cobbles and Boulders shall be approved by the engineer or WDFW representative by visual inspection of the load before it is mixed. The Streambed Aggregate Mix shall also be approved by the engineer or WDFW representative prior to placement of material.

9-03.11(3) Streambed Boulders

Streambed boulders shall be hard, sound and durable material, free from seams, cracks, and other defects tending to destroy its resistance to weather. Streambed Boulders shall be rounded to sub-angular in shape and the thickness axis shall be greater than 60 percent of the length axis. Streambed boulders sizes are approximately as follows, see Plans for sizes specified:

Rock Size1	Approximate Size
Two Man	18″ – 28″

1Approximate Size can be determined by taking the average dimension of the three axes of the rock, Length, Width, and Thickness, by use of the following calculation:

$$\frac{\text{Length + Width + Thickness}}{3} = \text{Approximate Size}$$

Length is the longest axis, width is the second longest axis, and thickness is the shortest axis.

9-14 EROSION CONTROL AND ROADSIDE PLANTING

9-14.1 Soil

9-14.1(1) Topsoil Type A

General: Topsoil shall be free draining, fertile, friable sandy loam, and shall supply the following composition requirements: weed and seed free; pH between 5.5 and 7.5; maximum particle size to 1/2 inch, with 97% to 100% passing the 3/8 inch screen; soluble salts shall not exceed 4.0 mmho/cm; free of clay lumps, litter and toxic matter harmful to plant growth. Components shall conform to the requirements indicated. Percentages below are by volume. Mixing of the soil components shall not occur on site.

	Sand	Compost	Sandy Loam
Topsoil for turf, rough grass and plant bed areas	34%	33%	33%

Top Sand: Conform to the following analysis using Tyler Standard Screens - Equivalent U.S. Series Number:

Sieve Size	Percent Passing by Weight
#4	100%
#10	95-100%
#16	85-100%
#30	75-90%
#60	15-30%
#100	0-5%
#200 (wet sieve)	0-1.5%

Composted Mulch: Material shall be derived from aerobic decomposition of recycled plant waste fully composted; material shall be composted on a paved surface and shall have a

moisture content of between 20% and 40%; no visible free water or dust shall be produced when handling the material; fresh sawdust or fresh wood by products shall not have been added after the composting process has begun. No recycled sanican waste shall be used. Yard waste shall be from permitted composting facility. Pure organic matter content shall be between 30% and 50% by weight. 100% of composted yard waste shall pass the 7/16 inch screen and a minimum 50% shall pass the 1/4" screen. Material shall be maintained at a 15% oxygen level throughout the composting process.

Sandy Loam: Shall be derived from the "A" horizon of naturally occurring, free draining, friable soils. Soils with a high clay content will be rejected. Submit separate sample for approval prior to mixing.

9-14.2 Seed

Section 9-14.2 is supplemented with the following:

Grass seed for Seeded Lawn Installation shall be a blended seed mixture of non-leafy grasses of a commercial grade for home lawn use. The composition, proportion, and quality shall be subject to the advance approval of the Engineer. Grass seed mixtures for playgrounds, pastures, roadside seeding, or other non-residential use shall not be allowed. The approved grass seed mixture shall be applied to the rate of five pounds per 1,000 square feet.

The seed mix for Wetland Seed Installation shall be as follows:

Wetland Seed Mix

Name	# Pure Live Seed/acre
Western Manna Grass *Glyceria occidentalis*	90
Tufted Hairgrass *Deschampsia cespitosa*	6
Canada Reed *Calamagrostis Canadensis*	2
Spike Bentgrass *Agrostis exarata*	2

The wetland seed mix shall be applied to the rate of 2500 lbs per acre of hydroseed mulch.

9-14.3 Fertilizer

Section 9-14.3 is supplemented with the following:

The Contractor shall supply a commercially available starter fertilizer designed by the manufacturer for use in new lawn installation applications. The fertilizer formula and application rate shall provide the following types and amounts of nutrients at a minimum:

Total Nitrogen as N - One pound per thousand square feet

Available Phosphoric Acid as P_20_5 - One pound per thousand square feet

Soluble Potash as K_20 - One pound per thousand square feet.
50-60 percent of the total nitrogen shall be derived from ureaform or ureformaldehyde. The remainder may be derived from any source.

9-27 CRIBBING

9-27.3(6) Stone

Section 9-27.3(6) is supplemented with the following:

Stone for filling gabion mattresses shall have a Degradation Factor of at least 30. The stone shall be dense enough to pass the unit weight test described in Section 8-24.3(3)F. At least 85 percent of the stone shall be within the predominant stone size range. Stone shall also meet the following requirements:

Mattress Height (inches)	Predominant Stone Size (inches)	Minimum Stone Dimension (inches)	Maximum Stone Dimension (inches)
6" 9" 12"	3 to 5	3	5

% Fracture = 75 min.

The following new Section is created:

9-37 GRAVEL BAGS

Section 9-37 is added as follows:

Gravel bags shall be 17" x 27" Polypropylene bags filled with streambed sediment meeting the requirements of 9-03.11(1).

The following new Section is created:

9-38 FISH SCREENS

Section 9-38 is added as follows:

Material for fish screens shall be 6-16 or 6-14 (six squares per inch, 14 or 16 gauge) woven wire mesh.

Standard Plans
January 9, 2012

The State of Washington Standard Plans for Road, Bridge and Municipal Construction M21-01 transmitted under Publications Transmittal No. PT 09-013, effective January 2, 2012 is made a part of this contract.

The Standard Plans are revised as follows:

B-10.20 and B10.40
Substitute "step" in lieu of "handhold" on plan

C-14a
SECTION B, callout – 1½" PVC CONDUIT (TYP.) is revised to read: 1¼" PVC CONDUIT (TYP.) callout (mark) 8 #9 ~ 36" (TYP.) is revised to read: callout (mark) 8 #8 ~ 36" (TYP.) EPOXY BAR EXPANSION JOINT DETAIL, callout (mark) W #9 (epoxy coated symbol) ~ 36" (TYP.) is revised to read: callout (mark) 8 #8 (epoxy coated symbol) ~ 36" (TYP.)

C-23.60
Note 4. For anchor post assembly details, see Standard Plan C-1b. Use detail on this plan for wood breakaway post. (No block on this post)

Is revised as follows:

Note 4. For anchor post assembly details, refer to standard plan C-1b for Sim. Installation, with the exception of using the wood breakaway post detail, this plan. (No block on this post). Typical for both steel or wood guardrail runs.

G-24.40
Existing callout - CORNER BOLT (TYP.)
New callout - CORNER BOLT OR SHOULDER BOLT (TYP.)

J-1f
Note 2, reference to J-7d is revised to J-15.15
References to J-9a (3 instances) are revised to J-60.05

J-3b
Sheet 2 of 2, Plan View of Service Cabinet, Boxed Note, "SEE STANDARD PLAN J-6C…" is revised to read: "SEE STANDARD PLAN J-10.10…"
Sheet 2 of 2, Plan View of Service Cabinet Notes, references to Std. Plan J-9a are revised to J-60.05 (3 instances).

J-7c
Note 3, reference to J-7d is revised to J-15.15

J-16b

Key Note 1, reference to J-16a is revised to J-40.36

J-16c
Key Note 1, reference to J-16a is revised to J-40.36

J-20.10
Sheet 2, 2-Way Mounting Angle Detail,
Dimension 1.625" is revised to 1.8125"
Dimension 2.375" is revised to 2.1875"

J-75.40
Monotube Sign Structure, elevation, callout – EQUIPMENT GROUNDING CONDUCTOR ~ SIZE PER NEC. MINIMUM SIZE # 8
Is revised to read; EQUIPMENT GROUNDING CONDUCTOR ~ SIZE PER NEC minimum size # 4 AWG
Detail C, callout– EQUIPMENT GROUNDING CONDUCTOR ~ CLAMP TO STEEL REINFORCING BAR, SIZE PER NEC MIN. SIZE # 8
Is revised to read; EQUIPMENT GROUNDING CONDUCTOR ~ CLAMP TO STEEL REINFORCING BAR, SIZE PER NEC minimum size # 4 AWG

J-75.45
elevation, callout – EQUIPMENT GROUNDING CONDUCTOR ~ SIZE PER NEC. MINIMUM SIZE # 8

Is revised to read:

EQUIPMENT GROUNDING CONDUCTOR ~ SIZE PER NEC minimum size # 4 AWG

Detail D, callout– EQUIPMENT GROUNDING CONDUCTOR ~ CLAMP TO STEEL REINFORCING BAR, SIZE PER NEC. MIN. SIZE # 8

Is revised to read:

EQUIPMENT GROUNDING CONDUCTOR ~ CLAMP TO STEEL REINFORCING BAR, SIZE PER NEC minimum size # 4 AWG

K-80.30
In the NARROW BASE, END view, the reference to Std. Plan C-8e is revised to Std. Plan K-80.35

L-20.10, Sheet 1
Delete all references to tension cable and substitute tension wire. Add knuckled selvage is required on the top edge of the fence fabric.

L-20.10, Sheet 2

Delete all references to tension cable and substitute tension wire. All rope thimbles, wire rope clips and seizing are not required.

L-30.10, Sheet 1
Delete all references to tension cable and substitute tension wire.

L-30.10, Sheet 2
Delete all references to tension cable and substitute tension wire. All rope thimbles, wire rope clips and seizing are not required.

The following are the Standard Plan numbers applicable at the time this project was advertised. The date shown with each plan number is the publication approval date shown in the lower right-hand corner of that plan. Standard Plans showing different dates shall not be used in this contract.

A-10.10-00.....8/7/07
A-10.20-00.....10/5/07
A-10.30-00.....10/5/07
A-20.10-00.....8/31/07
A-30.10-00.....11/8/07
A-30.15-00.....11/8/07
A-30.30-01.....6/16/11
A-30.35-00.....10/12/07
A-40.00-00.....8/11/09
A-40.10-02.....6/2/11
A-40.15-00.....8/11/09
A-40.20-00.....9/20/07
A-40.50-01.....6/2/11
A-50.10-00.....11/17/08
A-50.20-01.....9/22/09
A-50.30-00.....11/17/08
A-50.40-00.....11/17/08
A-60.10-01.....10/14/09
A-60.20-02.....6/2/11
A-60.30-00.....11/8/07
A-60.40-00.....8/31/07

B-5.20-01.....6/16/11
B-5.40-01.....6/16/11
B-5.60-01.....6/16/11
B-10.20-00.....6/1/06
B-10.40-00.....6/1/06
B-10.60-00.....6/8/06
B-15.20-00.....6/1/06
B-15.40-00.....6/1/06
B-15.60-00.....6/1/06
B-20.20-01.....11/21/06
B-20.40-02.....6/10/08
B-20.60-02.....6/10/08
B-25.20-00.....6/8/06
B-25.60-00.....6/1/06
B-30.10-00.....6/8/06
B-30.20-01.....11/21/06
B-30.30-00.....6/1/06
B-30.40-00.....6/1/06
B-30.50-00.....6/01/06
B-30.70-02.....6/16/11
B-30.80-00.....6/8/06
B-30.90-01.....9/20/07
B-35.20-00.....6/8/06
B-35.40-00.....6/8/06
B-40.20-00.....6/1/06
B-40.40-01.....6/16/10
B-45.20-00.....6/1/06
B-45.40-00.....6/1/06
B-50.20-00.....6/1/06
B-55.20-00.....6/1/06
B-60.20-00.....6/8/06
B-60.40-00.....6/1/06
B-65.20-00.....6/1/06
B-65.40-00.....6/1/06
B-70.20-00.....6/1/06
B-70.60-00.....6/1/06
B-75.20-01.....6/10/08
B-75.50-01.....6/10/08
B-75.60-00.....6/8/06
B-80.20-00.....6/8/06
B-80.40-00.....6/1/06
B-82.20-00.....6/1/06
B-85.10-01.....6/10/08
B-85.20-00.....6/1/06
B-85.30-00.....6/1/06
B-85.40-00.....6/8/06
B-85.50-01.....6/10/08
B-90.10-00.....6/8/06
B-90.20-00.....6/8/06
B-90.30-00.....6/8/06
B-90.40-00.....6/8/06
B-90.50-00.....6/8/06
B-95.20-01.....2/3/09
B-95.40-00.....6/8/06

C-1.....6/16/11
C-1a.....10/14/09
C-1b.....6/16/11
C-1c.....5/30/97
C-1d.....10/31/03
C-2.....1/6/00
C-2a.....6/21/06
C-5.....6/16/11
C-6.....5/30/97
C-6a.....10/14/09
C-6c.....1/6/00
C-6d.....5/30/97
C-6f.....7/25/97
C-7.....6/16/11
C-20.14-01.....10/14/09
C-20.15-00.....10/14/09
C-20.18-00.....10/14/09
C-20.19-00.....10/14/09
C-20.40-02.....6/16/11
C-20.42-02.....6/16/11
C-20.45.00.....6/16/11

C-2b.....6/21/06
C-2c.....6/21/06
C-2d.....6/21/06
C-2e.....6/21/06
C-2f.....3/14/97
C-2g.....7/27/01
C-2h.....3/28/97
C-2i.....3/28/97
C-2j.....6/12/98
C-2k.....7/27/01
C-2n.....7/27/01
C-2o.....7/13/01
C-2p.....10/31/03
C-3.....6/27/11
C-3a.....10/4/05
C-3b.....6/27/11
C-3c.....6/27/11
C-4b.....6/8/06
C-4e.....2/20/03
C-4f.....6/16/11
C-7a.....6/16/11
C-8.....2/10/09
C-8a.....7/25/97
C-8b.....6/27/11
C-8e.....2/21/07
C-8f.....6/30/04
C-10.....6/3/10
C-13.....7/3/08
C-13a.....7/3/08
C-13b.....7/3/08
C-13c.....7/3/08
C-14a.....7/3/08
C-14b.....7/26/02
C-14c.....7/3/08
C-14d.....7/3/08
C-14e.....7/3/08
C-15a.....7/3/08
C-15b.....7/3/08
C-16a.....6/3/10
C-16b.....6/3/10
C-22.14-02.....6/16/11
C-22.16-02.....6/16/11
C-22.40-02.....6/16/10
C-22.45.00.....6/16/11
C-23.60-01.....10/14/09
C-25.18-02.....6/16/11
C-25.20-04.....10/14/09
C-25.22-03.....10/14/09
C-25.26-01.....10/14/09
C-25.80-01.....7/3/08
C-28.40-01.....6/16/11
C-40.14-01.....6/3/10
C-40.16-01.....6/3/10
C-40.18-01.....10/14/09
C-85.14-00.....6/16/11
C-85.15-00.....6/16/11
C-85.16-00.....6/16/11
C-85-18-00.....6/16/11
C-85.20-00.....6/16/11
C-90.10-00.....7/3/08

D-2.04-00.....11/10/05
D-2.06-01.....1/6/09
D-2.08-00.....11/10/05
D-2.14-00.....11/10/05
D-2.16-00.....11/10/05
D-2.18-00.....11/10/05
D-2.20-00.....11/10/05
D-2.32-00.....11/10/05
D-2.34-01.....1/6/09
D-2.36-02.....1/6/09
D-2.42-00.....11/10/05
D-2.44-00.....11/10/05
D-2.60-00.....11/10/05
D-2.62-00.....11/10/05
D-2.46-00.....11/10/05
D-2.48-00.....11/10/05
D-2.64-01.....1/6/09
D-2.66-00.....11/10/05
D-2.68-00.....11/10/05
D-2.80-00.....11/10/05
D-2.82-00.....11/10/05
D-2.84-00.....11/10/05
D-2.86-00.....11/10/05
D-2.88-00.....11/10/05
D-2.92-00.....11/10/05
D-3.....6/2/11
D-3.10-00.....6/16/10
D-3.11-00.....6/16/10
D-3.17-00.....6/16/11
D-3.15-00.....6/16/11
D-3.16-00.....6/16/11
D-4.....12/11/98
D-6.....6/19/98
D-10.10-01.....12/2/08
D-10.15-01.....12/2/08
D-10.20-00.....7/8/08
D-10.25-00.....7/8/08
D-10.30-00.....7/8/08
D-10.35-00.....7/8/08
D-10.40-01.....12/2/08
D-10.45-01.....12/2/08
D-15.10-01.....12/2/08
D-15.20-02.....6/2/11
D-15.30-01.....12/02/08

E-1.....2/21/07
E-2.....5/29/98
E-4.....8/27/03
E-4a.....8/27/03

F-10.12-02.....6/16/11
F-10.16-00.....12/20/06
F-10.18-00.....6/27/11
F-10.40-01.....7/3/08
F-10.42-00.....1/23/07
F-10.62-01.....9/05/07
F-10.64-02.....7/3/08
F-30.10-01.....6/3/10
F-40.12-01.....6/3/10
F-40.14-01.....6/3/10
F-40.15-01.....6/3/10
F-40.16-01.....6/3/10
F-45.10-00.....6/3/10
F-80.10-01.....6/3/10

G-10.10-00.....9/20/07
G-20.10-00.....9/20/07
G-22.10-01.....7/3/08
G-24.10-00.....11/8/07
G-24.60-01.....6/16/11
G-25.10-02.....6/27/11
G-30.10-01.....6/16/11
G-50.10-00.....11/8/07
G-70.20-01....6/27/11
G-70.30-01.....6/27/11
G-90.10-01.....5/11/11
G-90.20-01.....6/27/11

G-24.20-00.....11/8/07
G-24.30-00.....11/8/07
G-24.40-01.....12/2/08
G-24.50-00.....11/8/07

G-60.10-01.....6/27/11
G-60.20-01.....6/27/11
G-60.30-01.....6/27/11
G-70.10-01.....6/27/11

G-90.30-01.....6/2/11
G-90.40-01.....10/14/09
G-95.10-01.....6/2/11
G-95.20-02.....6/2/11
G-95.30-02.....6/2/11

H-10.10-00.....7/3/08
H-10.15-00.....7/3/08
H-30.10-00.....10/12/07

H-32.10-00.....9/20/07
H-60.10-01.....7/3/08
H-60.20-01.....7/3/08

H-70.10-00.....9/5/07
H-70.20-00.....9/5/07
H-70.30-01.....11/17/08

I-10.10-01.....8/11/09
I-30.10-01.....8/11/09
I-30.15-00.....8/11/09
I-30.20-00.....9/20/07
I-30.30-00.....9/20/07

I-30.40-00.....10/12/07
I-30.50-00.....11/14/07
I-40.10-00.....9/20/07
I-40.20-00.....9/20/07
I-50.10-00.....9/20/07

I-50.20-00.....8/31/07
I-60.10-00.....8/31/07
I-60.20-00.....8/31/07
I-80.10-01.....8/11/09

J-1f.....6/23/00
J-3.....8/1/97
J-3b.....3/4/05
J-3c.....6/24/02
J-3d.....11/5/03
J-7c.....6/19/98
J-10.....7/18/97
J-10.10-01.....5/11/11
J-12.....2/10/09
J-15.15-00.....6/16/10
J-16b.....2/10/09
J-16c.....2/10/09
J-20.10-00.....10/14/09
J-20.15-00.....10/14/09
J-20.16-00.....10/14/09
J-20.20-00.....10/14/09
J-20.26-00.....10/14/09
J-21.10-02.....6/27/11
J-21.15-00.....10/14/09
J-21.16-00.....10/14/09
J-21.17-00.....10/14/09

J-21.20-00.....10/14/09
J-22.15-00.....10/14/09
J-22.16-01.....6/3/10
J-26.10-01.....6/27/11
J-26.15-00.....6/16/10
J-28.10-01.....5/11/11
J-28.22-00.....8/07/07
J-28.24-00.....8/07/07
J-28.26-01.....12/02/08
J-28.30-02.....6/27/11
J-28.40-01.....10/14/09
J-28.42-00.....8/07/07
J-28.45-01.....6/27/11
J-28.50-02.....6/2/11
J-28.60-01.....6/2/11
J-28.70-01.....5/11/11
J-29.10-00.....6/27/11
J-29.15-00.....6/27/11
J-29.16-00.....6/27/11
J-40.10-02.....5/11/11
J-40.20-00.....5/11/11

J-40.30-02.....5/11/11
J-40.36-00.....6/3/10
J-40.37-00.....6/3/10
J-40.38-00.....6/16/11
J-50.10-00.....6/3/11
J-50.11-00.....6/3/11
J-50.12-00.....6/3/11
J-50.15-00.....6/3/11
J-50.16-00.....6/3/11
J-50.20-00.....6/3/11
J-50.25-00.....6/3/11
J-50.30-00.....6/3/11
J-60.05-00.....6/16/11
J-60.13-00.....6/16/10
J-60.14-00.....6/16/10
J-75.10-01.....5/11/11
J-75.20-00.....2/10/09
J-75.30-01.....5/11/11
J-75.40-00.....10/14/09
J-75.45-00.....10/14/09
J-90.10-01.....6/27/11
J-90.20-01.....6/27/11

K-10.20-01.....10/12/07
K-10.40-00.....2/15/07
K-20.20-01.....10/12/07
K-20.40-00.....2/15/07
K-20.60-00.....2/15/07
K-22.20-01.....10/12/07
K-24.20-00.....2/15/07
K-24.40-01.....10/12/07
K-24.60-00.....2/15/07
K-24.80-01.....10/12/07
K-26.20-00.....2/15/07

K-26.40-01.....10/12/07
K-30.20-00.....2/15/07
K-30.40-01.....10/12/07
K-32.20-00.....2/15/07
K-32.40-00.....2/15/07
K-32.60-00.....2/15/07
K-32.80-00.....2/15/07
K-34.20-00.....2/15/07
K-36.20-00.....2/15/07
K-40.20-00.....2/15/07
K-40.40-00.....2/15/07

K-40.60-00.....2/15/07
K-40.80-00.....2/15/07
K-55.20-00.....2/15/07
K-60.20-02.....7/3/08
K-60.40-00.....2/15/07
K-70.20-00.....2/15/07
K-80.10-00.....2/21/07
K-80.20-00.....12/20/06
K-80.30-00.....2/21/07
K-80.35-00.....2/21/07
K-80.37-00.....2/21/07

L-10.10-01.....6/16/11
L-20.10-01.....6/16/11
L-30.10-01.....6/16/11
L-40.10-01.....6/16/11
L-40.15-01.....6/16/11
L-40.20-01.....6/16/11
L-70.10-01.....5/21/08
L-70.20-01.....5/21/08

M-1.20-02.....6/3/11
M-1.40-02.....6/3/11
M-1.60-02.....6/3/11
M-1.80-03.....6/3/11
M-2.20-02.....6/3/11
M-3.10-03.....6/3/11
M-3.20-02.....6/3/11
M-3.30-03.....6/3/11
M-3.40-03.....6/3/11
M-3.50-02.....6/3/11
M-5.10-02.....6/3/11
M-7.50-01.....1/30/07
M-9.50-01.....1/30/07
M-9.60-00.....2/10/09
M-11.10-01.....1/30/07
M-15.10-01.....2/6/07
M-17.10-02.....7/3/08
M-20.10-02.....6/3/11
M-20.20-01.....1/30/07
M-20.30-02.....10/14/09
M-20.40-02.....6/3/11
M-20.50-02.....6/3/11
M-24.20-01.....5/31/06
M-24.40-01.....5/31/06
M-24.50-00.....6/16/11
M-24.60-03.....5/11/11
M-40.10-02.....5/11/11
M-40.20-00...10/12/07
M-40.30-00.....9/20/07
M-40.40-00.....9/20/07
M-40.50-00.....9/20/07
M-40.60-00.....9/20/07
M-60.10-01.....6/3/11
M-60.20-02.....6/27/11
M-65.10-02.....5/11/11
M-80.10-01.....6/3/11
M-80.20-00.....6/10/08
M-80.30-00.....6/10/08

CONTRACT FORMS

(This Page Intentionally Left Blank)

CONTRACT
FOR:
MAIN STREET IMPROVEMENTS (DOUGLAS TO CHURCH)
FERNDALE, WASHINGTON

This Contract, made and entered into this ____ day of _____, 2012 by and between the City of Ferndale, hereinafter called the "Owner" and _____, hereinafter called the "Contractor".

WITNESSETH:

That in consideration of the terms and conditions contained herein and attached and made a part of this Contract, the parties hereto covenant and agree as follows:

1. The Contractor shall do all of the work and furnish all of the labor, materials, tools and equipment for the construction of the improvements and shall perform any changes in the work, all in full compliance with the contract documents entitled **"Main Street Improvements (Douglas to Church), Ferndale, Washington".**

   The "Bid Proposal", "Specifications and Conditions", "Contract Forms", and the "Plans" sections contained in said contract documents are hereby referred to and by reference made a part hereof.

2. The Owner hereby promises and agrees with the Contractor to employ, and does employ the Contractor to furnish the labor, materials, tools and equipment, and to and cause to be done the above-described work, and to complete and finish the same in accordance with the said contract documents and the terms and conditions herein contained, and hereby contracts to pay for the same, according to the said contract documents, including the schedule of estimated quantities, and unit and lump sum prices in the Bid Proposal, the approximate sum of _____, the total amount of bid, subject to the actual quantity of work performed, at the time and in the manner and upon the conditions provided for in this contract.

3. The Contractor for himself, and for his agents, successors, assigns, subcontractors and/or employees, does hereby agree to the full performance of all the covenants herein contained upon the part of the Contractor.

4. The Owner hereby appoints and the Contractor hereby accepts Reichhardt & Ebe Engineering, Inc., hereinafter referred to as the Engineer, as the City's representative for the purpose of administering the provisions of this Contract, including the Owner's right to receive and act on all reports and documents related to this Contract, to request and receive additional information from the Contractor, to assess the general performance of the Contractor under this Contract, to determine if the contracted services are being performed in accordance with Federal, State or local laws, and to administer any other right granted to the Owner under this Contract. The Owner expressly reserves the right to terminate this

Contract as provided in the contract documents, and also expressly the reserves the right to commence civil action for the enforcement of this contract.

5. This Contract contains terms and conditions agreed upon by the parties. The parties agree that there are no other understandings, oral or otherwise, regarding the subject matter of this Contract.

6. The Contractor agrees to comply with all applicable Federal, State, City or municipal standards for the licensing, certification, operation of facilities and programs, and accreditation and licensing of individuals.

7. The Contractor shall not assign or subcontract any portion of the work provided for under the terms of this Contract without obtaining prior written approval of the Engineer. All terms and conditions of this Contract shall apply to any approved subcontract or assignment related to this Contract.

8. The parties intend that an independent Contractor-Owner relationship will be created by this Contract. The Owner is interested only in the results to be achieved, the implementation of the work will lie solely with the Contractor. The Contractor will be solely and entirely responsible for its acts and for the acts of its agents, employees, servants, subcontractors, or otherwise during the performance of this Contract. In the performance of the work herein contemplated, the Contractor is an independent Contractor with regard to the performance of the details of the work; however, the components of and the results of the work contemplated herein must meet the approval of the Engineer and shall be subject to the Engineer's general rights of inspection and review to secure the satisfactory completion thereof.

9. The Contractor agrees and covenants to indemnify, defend, and save harmless, the Owner and the City of Ferndale and those persons who were, now are, or shall be duly elected or appointed officials or members of employees thereof, hereinafter referred to as the "Owner" or "City" against and from any loss, damage, costs, charge, expense, liability, claims, demands or judgments, of whatsoever kind or nature, whether to persons or to property, arising wholly or partially out of any act, action, neglect, omission, or default on the part of the Contractor, his agents, successors, assignees, subcontractors and/or employees, except only such injury or damage as shall have been caused by or resulted from the sole negligence of the City. In case any suit or cause of action shall be brought against the Owner or the City on account of any act, action, neglect, omission, or default on the part of the Contractor, his agents, successors, assignees, subcontractors and/or employees the Contractor hereby agrees and covenants to assume the defense thereof and to pay any and all costs, charges, attorney's fees and other expenses and any and all judgments that may be incurred or obtained against the City.

   In the event the Owner is required to institute legal action and/or participate in the legal action to enforce this Indemnification and Hold Harmless Clause, the Contractor agrees to pay the Owner or City's legal fees, costs and disbursements incurred in establishing the right to indemnification.

If the claim, suit, or action for injuries, death, or damages as provided for in the preceding paragraphs of this specification is caused by or results from the concurrent negligence of (a) the indemnitee or the indemnitee's agents or employees and (b) the indemnitor or the indemnitor's agents for employees the indemnity provisions provided for in the preceding paragraphs of this specification shall be valid and enforceable only to the extent of the indemnitor's negligence.

Contractor hereby specifically and expressly waives any immunity under Industrial Insurance, Title 51 RCW and acknowledges that this waiver was mutually negotiated by the parties herein. In the event of litigation between the parties to enforce the rights under this paragraph, reasonable attorney's fees shall be allowed to the prevailing party.

10. This Contract has been and shall be construed as having been made and delivered within the State of Washington, and it is mutually understood and agreed by each party hereto that this Contract shall be governed by the laws of the State of Washington, both as to interpretation and performance. Any action in law, suit and equity or judicial proceedings for the enforcement of this contract, or any provisions thereof, shall be instituted and maintained in the courts of competent jurisdiction located in City of Ferndale, Washington.

11. The failure of the Owner to insist upon strict performance of any of the covenants and agreements of this Contract or to exercise any option herein conferred in any one or more instances shall not be construed to be a waiver or relinquishment of any such, or any other covenants or agreements, but the same shall be and remain in full force and effect.

12. It is understood and agreed by the parties hereto that if any part of this agreement is determined to be illegal, the validity of the remaining portions shall be construed as if the agreement did not contain the particular illegal part.

13. No change or addition to this Contract shall be valid or binding upon either party unless such change or addition shall be in writing, executed by both parties.

14. In the event that funding from State, Federal, or other sources is withdrawn, reduced, or limited in any way after the effective date of this Agreement, and prior to its normal completion, the Owner may summarily terminate this Agreement as to the funds withdrawn, reduced, or limited notwithstanding any other termination provisions of this Agreement. If the level of funding withdrawn, reduced or limited is so great that the Owner deems that the continuation of the programs covered by this Agreement is no longer in the best interest of the City, the Owner may summarily terminate this Agreement in whole notwithstanding any other termination of this Agreement. Termination under this section shall be effective upon receipt of written notice as specified herein.

IN WITNESS WHEREOF, the Contractor has executed this instrument, on the day and year first below written and the Owner has caused this instrument to be executed by and in the name of the said County, the day and year first above written.

Executed by the Contractor this _____day of _____, 2012.

CITY OF FERNDALE:

By: _____
City Administrator / Mayor

STATE OF WASHINGTON)
) ss.
COUNTY OF WHATCOM)

On this _____ day of _____, 2012, before me personally appeared
_____ to me personally known to be the person described in and who executed the above instrument and who acknowledged to me the act of signing thereof.

NOTARY PUBLIC, in and for the
State of Washington, residing at:

My Commission Expires:_____

CONTRACTOR:

By: _____

Title: _____

STATE OF WASHINGTON)
) ss.
COUNTY OF WHATCOM)

On this _____ day of _____, 2012, before me personally appeared
_____ to me personally known to be the person described in and who executed the above instrument and who acknowledged to me the act of signing thereof.

NOTARY PUBLIC, in and for the
State of Washington, residing at:

My Commission Expires:_____

PERFORMANCE BOND
to the
City of Ferndale

KNOW ALL MEN BY THESE PRESENTS, That we_____ the Contractor named in the Contract hereinafter referred to as PRINCIPAL, and_____ as SURETY, are jointly and severally held and firmly bound to the City of Ferndale, hereinafter referred to as OWNER named in said Contract Main Street Improvement (Douglas to Church), Ferndale, Washington, for the penal sum of,

_____ DOLLARS ($_____),

lawful money of the United States, for the payment of which sum well and truly to be made, we bind ourselves, our heirs, assigns, administrators and successors jointly and severally, firmly by these presents.

THE CONDITION OF THIS OBLIGATION IS SUCH, that Whereas, the Principal entered into a contract with the Owner, dated the _____day of _____, 2012, for such construction work with the City of Ferndale, Washington.

NOW, THEREFORE, if the Principal shall well, truly and faithfully perform all of the provisions and fulfill all of the undertakings, covenants, terms, conditions and agreements of said contract during the period of the original contract and any extensions thereof that may be granted by the Owner, with or without notices to the surety; and during the life of any guaranty required under the contract; and shall also well and truly perform and fulfill all of the undertakings, covenants, terms, conditions and agreements of any and all duly authorized modifications of said contract that may hereafter be made; notice of which modifications to the surety being hereby waived, shall indemnify and save harmless owner from all cost and damage by reason of the principal's default of failure to do so, and shall pay the State of Washington sales and use taxes, and amounts due said state pursuant to Titles 50 and 51 of the Revised Code of Washington then this obligation to be void, otherwise to remain in full force and effect.

IN WITNESS WHEREOF, the above bonded parties have executed this instrument under their separate seals this _____ day of _____, 2012, the name and corporate seal of each corporate party hereto affixed, and these presents duly signed by its undersigned representatives pursuant to authority of its governing body.

PAYMENT BOND

To the
City of Ferndale

KNOW ALL MENT BY THESE PRESENTS: that

_____
(Name of Contractor)

_____
(Address of Contractor)

a _____, hereinafter called Principal,
(Corporation, Partnership or Individual)

and_____
(Name of Surety)

_____
(Address of surety)

hereinafter called **SURETY**, are held and firmly bound unto_____

_____
(Name of Owner)

_____
(Address of Owner)

hereinafter called **OWNER**, in the penal sum of _____Dollars, $(_____)

in lawful money of the United States, for the payment of which sum well and truly to be made, we bind ourselves, successors, and assigns, jointly and severally, firmly by these presents.

THE CONDITION OF THIS OBLIGATION is such that whereas, the Principal entered into a certain contract with the **OWNER**, dated the _____day of _____
20___, a copy of which is hereto attached and made a part hereof for the construction of:

_____

_____

_____

_____

NOW, THEREFORE, if the Principal shall promptly make payment to all persons, firms, **SUBCONTRACTORS**, and corporations furnishing materials for or performing labor in the prosecution of the **WORK** provided for in such contract, and any authorized extension or modification thereof including all amounts due for materials, lubricants, oil, gasoline, coal, and coke, repairs on machinery, equipment and tools, consumed or used in connection with the construction of such **WORK,** and all Insurance premiums on said **WORK,** and for all labor, performed in such **WORK** whether by **SUBCONTRACTOR** or otherwise, then this obligation shall be void; otherwise to remain in full force and effect.

PROVIDED, FURTHER, that the said **SURETY** for value received hereby stipulates and agrees that no change, extension of time, alteration or addition to the terms of the contract or to the **WORK** to be performed thereunder or

the **SPECIFICATIONS** accompanying the same shall in any wise affect its obligation on this **BOND,** and it does hereby waive notice of any such change, extension of time, alteration or addition to the terms of the contract or to the **WORK** or to the **SPECIFICATIONS.**
PROVIDED, FURTHER, that no final settlement between the **OWNER** and the **CONTRACTOR** shall abridge the right of any beneficiary hereunder, whose claim may be unsatisfied.

IN WITNESS WHEREOF, this instrument is executed in_____counterparts, each on of which
(number)
shall be deemed an original, this the _____day of _____

ATTEST:

_____
Principal

_____
(Principal) Secretary

(SEAL) **By** _____(s)

_____
(Address)
_____

_____
Witness as to Principal

_____
(Address)

_____ _____
(Surety)

ATTEST: **By** _____
(Attorney –in-Fact)

_____ _____
Witness as to Surety (Address)

_____ _____
(Address)

NOTE: Date of **BOND** must not be prior to date of Contract.
If **CONTRACTOR** is Partnership, all partners should execute **BOND.**

IMPORTANT: Surety companies executing **BONDS** must appear on the Treasury Department's most current list (Circular 570 as amended) and be authorized to transact business in the State where the **PROJECT** is located.

CITY OF FERNDALE

RETAINAGE INVESTMENT OPTION

CONTRACTOR: _____

PROJECT NAME: _____

DATE: _____

Pursuant to Chapter 60.28 RCW, you may choose how your retainage under this contract will be held and invested. Please complete and sign this form indicating your preference. If you fail to do so, the City of Ferndale (City) will hold your retainage as described in "Current Expense", option 1 below.

_____1. Current Expense: The City will retain your money in its Current Expense Fund Account until thirty days following final acceptance of the improvement or work as completed. You will not receive interest earned on this money.

_____2. Interest Bearing Account: The City will deposit retainage checks in an interest-bearing account in a bank, mutual savings bank, or savings and loan association, not subject to withdrawal until after the final acceptance of the improvement or work as completed or until agreed to by both parties. Interest on the account will be paid to you.

BONDS AND SECURITIES ACCEPTABLE BY THE CITY OF FERNDALE:

1. Bills, certificates, notes or bonds of the United States.
2. Other obligations of the United States or its agencies.
3. Indebtedness of the Federal national Mortgage Association.
4. Time Deposits in commercial banks.

Designate below the type of investment selected:

_____

_____

_____

_____3. Bond-in-Lieu: With the consent of the City, the contractor may submit a bond for all or any portion of the amount of funds retained by the City in a form acceptable to the City and from a bonding company meeting standards established by the City, if any. Unless otherwise indicated, the contractor elects to submit a bond for the entire 5% retainage amount. Such bond and any proceeds there from shall be made subject to all claims and liens and in the same manner and priority as set forth for retained percentages in Chapter 60.28 RCW. Whenever the City accepts a bond-in-lieu of retained funds from a contractor, the contractor shall accept like bonds from any subcontractors or suppliers from which the contractor has retained funds. The contractor shall then release the funds retained from the subcontractor or supplier, to the subcontractor or supplier, within thirty days of the contractor's receipt of the retained funds from the City.

CONTRACT BOND

KNOW ALL MEN BY THESE PRESENTS: That whereas the City of Ferndale has awarded hereinafter designated as the "Principal," a contract for the construction of the Project designated as **Main Street Improvements, (Douglas to Church)**, all as hereto attached and made a part hereof and whereas, said Principal is required under the terms of said contract to furnish a bond for the faithful performance of said contract:

NOW THEREFORE, we the Principal and _____ (Surety) a corporation, organized and existing under the laws of the State of _____, duly authorized to do business in the State of Washington, as Surety, are held and firmly bound unto the City of Ferndale and the State of Washington in the sum of:_____ ($_____) (total amount of the contract), lawful money of the United States, for the payment of which sum on demand we bind ourselves, our heirs, executors, administrators, successors, and assigns, jointly and severally, firmly by these presents.

THE CONDITIONS OF THIS IBLIGATION ARE SUCH, that if the above bonded Principal, his or its heirs, executors, administrators, successors, or assigns shall in all things stand to and abide by, and well and truly keep and perform the covenants, conditions and agreements in the said contract, and shall faithfully perform all the provisions of such contract and shall also well and truly perform and fulfill all the undertakings, covenants, terms, conditions, and agreements of any and all duly authorized modifications of said contract that may hereafter be made, at the time and in the manner therein specified and shall pay all laborers, mechanics, subcontractors, and materialmen, and all persons who shall supply such person or persons, or subcontractors, with provisions and supplies for the carrying on of such work, on his/her or their part, and shall indemnify, defend, and save harmless the State of Washington, the City of Ferndale, their officers and agents; and shall further save harmless, defend, and indemnify said the City of Ferndale, from any defect or defects in any of the workmanship entering into any part of the work or designated equipment covered by said contract, which shall develop or be discovered within one (1) year after the final acceptance of such work, then this obligation shall become null and void; otherwise, it shall remain in full force and effect; provided that the liability hereunder for the defects in materials and workmanship for a period of one (1) year after the acceptance of the work shall not exceed the sum of _____ ($_____) (100% of the Contract).

And the said Surety, for value received, hereby further stipulates and agrees that no change, extension of time, alteration or addition to the terms of the contract or to the work to be performed thereunder or the specifications accompanying the same shall in any affect its obligation on the bond, and it does hereby waive notice of any change, extension of time, alternation or additions to the terms of the contract or the work or to the specifications.

IN WITNESS WHEREOF, the said principal and the said Surety have caused this bond and three (3) counterparts thereof to be signed and sealed by their duly authorized offices this _____day of _____, 2012.

_____	_____
Surety	Principal
By:_____	By:_____
Its:_____	Title:_____
Address of the local office of the Surety Company is:	TWO WITNESSES
_____	_____
_____	_____
_____	_____

APPENDICES

(This Page Intentionally Left Blank)

APPENDIX A
STATE PREVAILING WAGE RATES
(This Page Intentionally Left Blank)

State of Washington
Department of Labor & Industries

Prevailing Wage Section - Telephone 360-902-5335
PO Box 44540, Olympia, WA 98504-4540

Washington State Prevailing Wage

The PREVAILING WAGES listed here include both the hourly wage rate and the hourly rate of fringe benefits. On public works projects, worker's wage and benefit rates must add to not less than this total. A brief description of overtime calculation requirements are provided on the Benefit Code Key.

Journey Level Prevailing Wage Rates for the Effective Date: 4/1/12

County	Trade	Job Classification	Wage	Holiday	Overtime	Note
Whatcom	Asbestos Abatement Workers	Journey Level	$40.03	5D	1H	
Whatcom	Boilermakers	Journey Level	$44.35		1	
Whatcom	Brick Mason	Brick And Block Finisher	$41.41	5A	1M	
Whatcom	Brick Mason	Journey Level	$48.27	5A	1M	
Whatcom	Brick Mason	Pointer-Caulker-Cleaner	$48.27	5A	1M	
Whatcom	Building Service Employees	Janitor	$9.04		1	
Whatcom	Building Service Employees	Shampooer	$9.04		1	
Whatcom	Building Service Employees	Waxer	$9.04		1	
Whatcom	Building Service Employees	Window Cleaner	$9.04		1	
Whatcom	Cabinet Makers (In Shop)	Journey Level	$24.89		1	
Whatcom	Carpenters	Acoustical Worker	$48.63	5D	1M	
Whatcom	Carpenters	Bridge, Dock And Wharf Carpenters	$48.47	5A	1M	
Whatcom	Carpenters	Carpenter	$48.47	5D	1M	
Whatcom	Carpenters	Creosoted Material	$48.57	5D	1M	
Whatcom	Carpenters	Floor Finisher	$48.60	5D	1M	
Whatcom	Carpenters	Floor Layer	$48.60	5D	1M	
Whatcom	Carpenters	Floor Sander	$48.60	5D	1M	
Whatcom	Carpenters	Sawfiler	$48.60	5D	1M	
Whatcom	Carpenters	Shingler	$48.60	5D	1M	
Whatcom	Carpenters	Stationary Power Saw Operator	$48.60	5D	1M	
Whatcom	Carpenters	Stationary Woodworking Tools	$48.60	5D	1M	
Whatcom	Cement Masons	Journey Level	$49.15	7A	1M	
Whatcom	Divers & Tenders	Diver	$100.28	5D	1M	8A
Whatcom	Divers & Tenders	Diver On Standby	$56.68	5D	1M	
Whatcom	Divers & Tenders	Diver Tender	$52.23	5D	1M	
Whatcom	Divers & Tenders	Surface Rcv & Rov Operator	$52.23	5D	1M	
Whatcom	Divers & Tenders	Surface Rcv & Rov Operator	$48.67	5A	1B	

		Tender				
Whatcom	Dredge Workers	Assistant Engineer	$49.57	5D	1T	8L
Whatcom	Dredge Workers	Assistant Mate(deckhand)	$49.06	5D	1T	8L
Whatcom	Dredge Workers	Engineer Welder	$49.62	5D	1T	8L
Whatcom	Dredge Workers	Leverman, Hydraulic	$51.19	5D	1T	8L
Whatcom	Dredge Workers	Maintenance	$49.06	5D	1T	8L
Whatcom	Dredge Workers	Mates And Boatmen	$49.57	5D	1T	8L
Whatcom	Dredge Workers	Oiler	$49.19	5D	1T	8L
Whatcom	Drywall Applicator	Journey Level	$48.47	5D	1M	
Whatcom	Drywall Tapers	Journey Level	$29.63		1	
Whatcom	Electrical Fixture Maintenance Workers	Journey Level	$13.82		1	
Whatcom	Electricians - Inside	Cable Splicer	$58.70	7H	1E	
Whatcom	Electricians - Inside	Construction Stock Person	$29.16	7H	1D	
Whatcom	Electricians - Inside	Journey Level	$54.69	7H	1E	
Whatcom	Electricians - Motor Shop	Craftsman	$15.37		1	
Whatcom	Electricians - Motor Shop	Journey Level	$14.69		1	
Whatcom	Electricians - Powerline Construction	Cable Splicer	$64.95	5A	4A	
Whatcom	Electricians - Powerline Construction	Certified Line Welder	$59.37	5A	4A	
Whatcom	Electricians - Powerline Construction	Groundperson	$42.16	5A	4A	
Whatcom	Electricians - Powerline Construction	Head Groundperson	$44.50	5A	4A	
Whatcom	Electricians - Powerline Construction	Heavy Line Equipment Operator	$59.37	5A	4A	
Whatcom	Electricians - Powerline Construction	Jackhammer Operator	$44.50	5A	4A	
Whatcom	Electricians - Powerline Construction	Journey Level Lineperson	$59.37	5A	4A	
Whatcom	Electricians - Powerline Construction	Line Equipment Operator	$49.95	5A	4A	
Whatcom	Electricians - Powerline Construction	Pole Sprayer	$59.37	5A	4A	
Whatcom	Electricians - Powerline Construction	Powderperson	$44.50	5A	4A	
Whatcom	Electronic Technicians	Journey Level	$25.09		1	
Whatcom	Elevator Constructors	Mechanic	$75.24	7D	4A	
Whatcom	Elevator Constructors	Mechanic In Charge	$82.00	7D	4A	
Whatcom	Fabricated Precast Concrete Products	Journey Level - In-Factory Work Only	$13.67		1	
Whatcom	Fence Erectors	Fence Erector	$22.97		1	
Whatcom	Flaggers	Journey Level	$33.93	7A	2Y	
Whatcom	Glaziers	Journey Level	$50.91	7L	1Y	
Whatcom	Heat & Frost Insulators And Asbestos Workers	Journeyman	$55.68	5J	1S	

Whatcom	Heating Equipment Mechanics	Journey Level	$19.85		1	
Whatcom	Hod Carriers & Mason Tenders	Journey Level	$41.28	7A	2Y	
Whatcom	Industrial Engine And Machine Mechanics	Journey Level	$15.65		1	
Whatcom	Industrial Power Vacuum Cleaner	Journey Level	$9.24		1	
Whatcom	Inland Boatmen	Boat Operator	$51.95	5B	1K	
Whatcom	Inland Boatmen	Cook	$48.62	5B	1K	
Whatcom	Inland Boatmen	Deckhand	$48.62	5B	1K	
Whatcom	Inland Boatmen	Deckhand Engineer	$49.60	5B	1K	
Whatcom	Inland Boatmen	Launch Operator	$50.80	5B	1K	
Whatcom	Inland Boatmen	Mate	$50.80	5B	1K	
Whatcom	Inspection/Cleaning/Sealing Of Sewer & Water Systems By Remote Control	Cleaner Operator, Foamer Operator	$9.73		1	
Whatcom	Inspection/Cleaning/Sealing Of Sewer & Water Systems By Remote Control	Grout Truck Operator	$11.48		1	
Whatcom	Inspection/Cleaning/Sealing Of Sewer & Water Systems By Remote Control	Head Operator	$12.78		1	
Whatcom	Inspection/Cleaning/Sealing Of Sewer & Water Systems By Remote Control	Technician	$9.04		1	
Whatcom	Inspection/Cleaning/Sealing Of Sewer & Water Systems By Remote Control	Tv Truck Operator	$10.53		1	
Whatcom	Insulation Applicators	Journey Level	$48.47	5D	1M	
Whatcom	Ironworkers	Journeyman	$58.27	7N	1O	
Whatcom	Laborers	Air, Gas Or Electric Vibrating Screed	$40.03	7A	2Y	
Whatcom	Laborers	Airtrac Drill Operator	$41.28	7A	2Y	
Whatcom	Laborers	Ballast Regular Machine	$40.03	7A	2Y	
Whatcom	Laborers	Batch Weighman	$33.93	7A	2Y	
Whatcom	Laborers	Brick Pavers	$40.03	7A	2Y	
Whatcom	Laborers	Brush Cutter	$40.03	7A	2Y	
Whatcom	Laborers	Brush Hog Feeder	$40.03	7A	2Y	
Whatcom	Laborers	Burner	$40.03	7A	2Y	
Whatcom	Laborers	Caisson Worker	$41.28	7A	2Y	
Whatcom	Laborers	Carpenter Tender	$40.03	7A	2Y	
Whatcom	Laborers	Caulker	$40.03	7A	2Y	
Whatcom	Laborers	Cement Dumper-paving	$40.77	7A	2Y	
Whatcom	Laborers	Cement Finisher Tender	$40.03	7A	2Y	
Whatcom	Laborers	Change House Or Dry Shack	$40.03	7A	2Y	
Whatcom	Laborers	Chipping Gun (under 30 Lbs.)	$40.03	7A	2Y	
Whatcom	Laborers	Chipping Gun(30 Lbs. And Over)	$40.77	7A	2Y	

Whatcom	Laborers	Choker Setter	$40.03	7A	2Y	
Whatcom	Laborers	Chuck Tender	$40.03	7A	2Y	
Whatcom	Laborers	Clary Power Spreader	$40.77	7A	2Y	
Whatcom	Laborers	Clean-up Laborer	$40.03	7A	2Y	
Whatcom	Laborers	Concrete Dumper/chute Operator	$40.77	7A	2Y	
Whatcom	Laborers	Concrete Form Stripper	$40.03	7A	2Y	
Whatcom	Laborers	Concrete Placement Crew	$40.77	7A	2Y	
Whatcom	Laborers	Concrete Saw Operator/core Driller	$40.77	7A	2Y	
Whatcom	Laborers	Crusher Feeder	$33.93	7A	2Y	
Whatcom	Laborers	Curing Laborer	$40.03	7A	2Y	
Whatcom	Laborers	Demolition: Wrecking & Moving (incl. Charred Material)	$40.03	7A	2Y	
Whatcom	Laborers	Ditch Digger	$40.03	7A	2Y	
Whatcom	Laborers	Diver	$41.28	7A	2Y	
Whatcom	Laborers	Drill Operator (hydraulic,diamond)	$40.77	7A	2Y	
Whatcom	Laborers	Dry Stack Walls	$40.03	7A	2Y	
Whatcom	Laborers	Dump Person	$40.03	7A	2Y	
Whatcom	Laborers	Epoxy Technician	$40.03	7A	2Y	
Whatcom	Laborers	Erosion Control Worker	$40.03	7A	2Y	
Whatcom	Laborers	Faller & Bucker Chain Saw	$40.77	7A	2Y	
Whatcom	Laborers	Fine Graders	$40.03	7A	2Y	
Whatcom	Laborers	Firewatch	$33.93	7A	2Y	
Whatcom	Laborers	Form Setter	$40.03	7A	2Y	
Whatcom	Laborers	Gabian Basket Builders	$40.03	7A	2Y	
Whatcom	Laborers	General Laborer	$40.03	7A	2Y	
Whatcom	Laborers	Grade Checker & Transit Person	$41.28	7A	2Y	
Whatcom	Laborers	Grinders	$40.03	7A	2Y	
Whatcom	Laborers	Grout Machine Tender	$40.03	7A	2Y	
Whatcom	Laborers	Groutmen (pressure)including Post Tension Beams	$40.77	7A	2Y	
Whatcom	Laborers	Guardrail Erector	$40.03	7A	2Y	
Whatcom	Laborers	Hazardous Waste Worker (level A)	$41.28	7A	2Y	
Whatcom	Laborers	Hazardous Waste Worker (level B)	$40.77	7A	2Y	
Whatcom	Laborers	Hazardous Waste Worker (level C)	$40.03	7A	2Y	
Whatcom	Laborers	High Scaler	$41.28	7A	2Y	
Whatcom	Laborers	Jackhammer	$40.77	7A	2Y	
Whatcom	Laborers	Laserbeam Operator	$40.77	7A	2Y	
Whatcom	Laborers	Maintenance Person	$40.03	7A	2Y	
Whatcom	Laborers	Manhole Builder-mudman	$40.77	7A	2Y	

Whatcom	Laborers	Material Yard Person	$40.03	7A	2Y	
Whatcom	Laborers	Motorman-dinky Locomotive	$40.77	7A	2Y	
Whatcom	Laborers	Nozzleman (concrete Pump, Green Cutter When Using Combination Of High Pressure Air & Water On Concrete & Rock, Sandblast, Gunite, Shotcrete, Water Bla	$40.77	7A	2Y	
Whatcom	Laborers	Pavement Breaker	$40.77	7A	2Y	
Whatcom	Laborers	Pilot Car	$33.93	7A	2Y	
Whatcom	Laborers	Pipe Layer Lead	$41.28	7A	2Y	
Whatcom	Laborers	Pipe Layer/tailor	$40.77	7A	2Y	
Whatcom	Laborers	Pipe Pot Tender	$40.77	7A	2Y	
Whatcom	Laborers	Pipe Reliner	$40.77	7A	2Y	
Whatcom	Laborers	Pipe Wrapper	$40.77	7A	2Y	
Whatcom	Laborers	Pot Tender	$40.03	7A	2Y	
Whatcom	Laborers	Powderman	$41.28	7A	2Y	
Whatcom	Laborers	Powderman's Helper	$40.03	7A	2Y	
Whatcom	Laborers	Power Jacks	$40.77	7A	2Y	
Whatcom	Laborers	Railroad Spike Puller - Power	$40.77	7A	2Y	
Whatcom	Laborers	Raker - Asphalt	$41.28	7A	2Y	
Whatcom	Laborers	Re-timberman	$41.28	7A	2Y	
Whatcom	Laborers	Remote Equipment Operator	$40.77	7A	2Y	
Whatcom	Laborers	Rigger/signal Person	$40.77	7A	2Y	
Whatcom	Laborers	Rip Rap Person	$40.03	7A	2Y	
Whatcom	Laborers	Rivet Buster	$40.77	7A	2Y	
Whatcom	Laborers	Rodder	$40.77	7A	2Y	
Whatcom	Laborers	Scaffold Erector	$40.03	7A	2Y	
Whatcom	Laborers	Scale Person	$40.03	7A	2Y	
Whatcom	Laborers	Sloper (over 20")	$40.77	7A	2Y	
Whatcom	Laborers	Sloper Sprayer	$40.03	7A	2Y	
Whatcom	Laborers	Spreader (concrete)	$40.77	7A	2Y	
Whatcom	Laborers	Stake Hopper	$40.03	7A	2Y	
Whatcom	Laborers	Stock Piler	$40.03	7A	2Y	
Whatcom	Laborers	Tamper & Similar Electric, Air & Gas Operated Tools	$40.77	7A	2Y	
Whatcom	Laborers	Tamper (multiple & Self-propelled)	$40.77	7A	2Y	
Whatcom	Laborers	Timber Person - Sewer (lagger, Shorer & Cribber)	$40.77	7A	2Y	
Whatcom	Laborers	Toolroom Person (at Jobsite)	$40.03	7A	2Y	
Whatcom	Laborers	Topper	$40.03	7A	2Y	
Whatcom	Laborers	Track Laborer	$40.03	7A	2Y	
Whatcom	Laborers	Track Liner (power)	$40.77	7A	2Y	
Whatcom	Laborers	Truck Spotter	$40.03	7A	2Y	
Whatcom	Laborers	Tugger Operator	$40.77	7A	2Y	

Whatcom	Laborers	Tunnel Work-Compressed Air Worker 0-30 psi	$52.08	7A	2Y	8Q
Whatcom	Laborers	Tunnel Work-Compressed Air Worker 30.01-44.00 psi	$57.08	7A	2Y	8Q
Whatcom	Laborers	Tunnel Work-Compressed Air Worker 44.01-54.00 psi	$60.76	7A	2Y	8Q
Whatcom	Laborers	Tunnel Work-Compressed Air Worker 54.01-60.00 psi	$66.46	7A	2Y	8Q
Whatcom	Laborers	Tunnel Work-Compressed Air Worker 60.01-64.00 psi	$68.58	7A	2Y	8Q
Whatcom	Laborers	Tunnel Work-Compressed Air Worker 64.01-68.00 psi	$73.68	7A	2Y	8Q
Whatcom	Laborers	Tunnel Work-Compressed Air Worker 68.01-70.00 psi	$75.58	7A	2Y	8Q
Whatcom	Laborers	Tunnel Work-Guage and Lock Tender	$41.38	7A	2Y	8Q
Whatcom	Laborers	Tunnel Work-Miner	$41.38	7A	2Y	8Q
Whatcom	Laborers	Vibrator	$40.77	7A	2Y	
Whatcom	Laborers	Vinyl Seamer	$40.03	7A	2Y	
Whatcom	Laborers	Watchman	$30.84	7A	2Y	
Whatcom	Laborers	Welder	$40.77	7A	2Y	
Whatcom	Laborers	Well Point Laborer	$40.77	7A	2Y	
Whatcom	Laborers	Window Washer/cleaner	$30.84	7A	2Y	
Whatcom	Laborers - Underground Sewer & Water	General Laborer & Topman	$40.03	7A	2Y	
Whatcom	Laborers - Underground Sewer & Water	Pipe Layer	$40.77	7A	2Y	
Whatcom	Landscape Construction	Irrigation Or Lawn Sprinkler Installers	$11.50		1	
Whatcom	Landscape Construction	Landscape Equipment Operators Or Truck Drivers	$11.50		1	
Whatcom	Landscape Construction	Landscaping Or Planting Laborers	$11.50		1	
Whatcom	Lathers	Journey Level	$48.74	5D	1H	
Whatcom	Marble Setters	Journey Level	$48.27	5A	1M	
Whatcom	Metal Fabrication (In Shop)	Fitter	$13.81		1	
Whatcom	Metal Fabrication (In Shop)	Laborer	$9.04		1	
Whatcom	Metal Fabrication (In Shop)	Machine Operator	$13.81		1	
Whatcom	Metal Fabrication (In Shop)	Welder	$13.81		1	
Whatcom	Millwright	Journey Level	$30.79		1	
Whatcom	Modular Buildings	Journey Level	$9.04		1	
Whatcom	Painters	Journey Level	$35.72	6Z	2B	
Whatcom	Pile Driver	Journey Level	$48.67	5A	1M	
Whatcom	Plasterers	Journey Level	$46.88	7Q	1R	
Whatcom	Playground & Park Equipment Installers	Journey Level	$9.04		1	
Whatcom	Plumbers & Pipefitters	Journey Level	$61.57	5A	1G	

Whatcom	Power Equipment Operators	Asphalt Plant Operators	$50.39	7A	1T	8P
Whatcom	Power Equipment Operators	Assistant Engineer	$47.12	7A	1T	8P
Whatcom	Power Equipment Operators	Barrier Machine (zipper)	$49.90	7A	1T	8P
Whatcom	Power Equipment Operators	Batch Plant Operator, Concrete	$49.90	7A	1T	8P
Whatcom	Power Equipment Operators	Bobcat	$47.12	7A	1T	8P
Whatcom	Power Equipment Operators	Brokk - Remote Demolition Equipment	$47.12	7A	1T	8P
Whatcom	Power Equipment Operators	Brooms	$47.12	7A	1T	8P
Whatcom	Power Equipment Operators	Bump Cutter	$49.90	7A	1T	8P
Whatcom	Power Equipment Operators	Cableways	$50.39	7A	1T	8P
Whatcom	Power Equipment Operators	Chipper	$49.90	7A	1T	8P
Whatcom	Power Equipment Operators	Compressor	$47.12	7A	1T	8P
Whatcom	Power Equipment Operators	Concrete Pump: Truck Mount With Boom Attachment Over 42 M	$50.39	7A	1T	8P
Whatcom	Power Equipment Operators	Concrete Finish Machine -laser Screed	$47.12	7A	1T	8P
Whatcom	Power Equipment Operators	Concrete Pump - Mounted Or Trailer High Pressure Line Pump, Pump High Pressure.	$49.48	7A	1T	8P
Whatcom	Power Equipment Operators	Concrete Pump: Truck Mount With Boom Attachment Up To 42m	$49.90	7A	1T	8P
Whatcom	Power Equipment Operators	Conveyors	$49.48	7A	1T	8P
Whatcom	Power Equipment Operators	Cranes: 20 Tons Through 44 Tons With Attachments Overhead, Bridge Type Crane: 20 Tons Through 44 Tons	$49.90	7A	1T	8P
Whatcom	Power Equipment Operators	Cranes: 100 Tons Through 199 Tons, or 150' of boom (including jib with attachments); Overhead, bridge type, 100 tons and over; Tower crane up to 175' in height, base to boom.	$50.94	7A	1T	8P
Whatcom	Power Equipment Operators	Cranes: 200 Tons To 300 Tons, Or 250' Of Boom (including Jib With Attachments)	$51.51	7A	1T	8P
Whatcom	Power Equipment Operators	Cranes: 45 Tons Through 99 Tons, Under 150' Of Boom (including Jib With Attachments)	$50.39	7A	1T	8P
Whatcom	Power Equipment Operators	Cranes: A-frame - 10 Tons And Under	$47.12	7A	1T	8P
Whatcom	Power Equipment Operators	Cranes: Friction 100 Tons Through 199 Tons	$51.51	7A	1T	8P
Whatcom	Power Equipment Operators	Cranes: Friction Over 200 Tons	$52.07	7A	1T	8P
Whatcom	Power Equipment Operators	Cranes: Over 300 Tons Or 300' Of Boom (including Jib With	$52.07	7A	1T	8P

		Attachments)				
Whatcom	Power Equipment Operators	Cranes: Through 19 Tons With Attachments A-frame Over 10 Tons	$49.48	7A	1T	8P
Whatcom	Power Equipment Operators	Crusher	$49.90	7A	1T	8P
Whatcom	Power Equipment Operators	Deck Engineer/deck Winches (power)	$49.90	7A	1T	8P
Whatcom	Power Equipment Operators	Derricks, On Building Work	$50.39	7A	1T	8P
Whatcom	Power Equipment Operators	Dozer Quad 9, HD 41, D10 and Over	$50.39	7A	1T	8P
Whatcom	Power Equipment Operators	Dozers D-9 & Under	$49.48	7A	1T	8P
Whatcom	Power Equipment Operators	Drill Oilers: Auger Type, Truck Or Crane Mount	$49.48	7A	1T	8P
Whatcom	Power Equipment Operators	Drilling Machine	$49.90	7A	1T	8P
Whatcom	Power Equipment Operators	Elevator And Man-lift: Permanent And Shaft Type	$47.12	7A	1T	8P
Whatcom	Power Equipment Operators	Finishing Machine, Bidwell And Gamaco & Similar Equipment	$49.90	7A	1T	8P
Whatcom	Power Equipment Operators	Forklift: 3000 Lbs And Over With Attachments	$49.48	7A	1T	8P
Whatcom	Power Equipment Operators	Forklifts: Under 3000 Lbs. With Attachments	$47.12	7A	1T	8P
Whatcom	Power Equipment Operators	Grade Engineer: Using Blue Prints, Cut Sheets, Etc	$49.90	7A	1T	8P
Whatcom	Power Equipment Operators	Gradechecker/stakeman	$47.12	7A	1T	8P
Whatcom	Power Equipment Operators	Guardrail Punch/Auger	$49.90	7A	1T	8P
Whatcom	Power Equipment Operators	Hard Tail End Dump Articulating Off- Road Equipment 45 Yards. & Over	$50.39	7A	1T	8P
Whatcom	Power Equipment Operators	Hard Tail End Dump Articulating Off-road Equipment Under 45 Yards	$49.90	7A	1T	8P
Whatcom	Power Equipment Operators	Horizontal/directional Drill Locator	$49.48	7A	1T	8P
Whatcom	Power Equipment Operators	Horizontal/directional Drill Operator	$49.90	7A	1T	8P
Whatcom	Power Equipment Operators	Hydralifts/boom Trucks Over 10 Tons	$49.48	7A	1T	8P
Whatcom	Power Equipment Operators	Hydralifts/boom Trucks, 10 Tons And Under	$47.12	7A	1T	8P
Whatcom	Power Equipment Operators	Loader, Overhead 8 Yards. & Over	$50.94	7A	1T	8P
Whatcom	Power Equipment Operators	Loader, Overhead, 6 Yards. But Not Including 8 Yards	$50.39	7A	1T	8P
Whatcom	Power Equipment Operators	Loaders, Overhead Under 6 Yards	$49.90	7A	1T	8P
Whatcom	Power Equipment Operators	Loaders, Plant Feed	$49.90	7A	1T	8P
Whatcom	Power Equipment Operators	Loaders: Elevating Type Belt	$49.48	7A	1T	8P
Whatcom	Power Equipment Operators	Locomotives, All	$49.90	7A	1T	8P

Whatcom	Power Equipment Operators	Material Transfer Device	$49.90	7A	1T	8P
Whatcom	Power Equipment Operators	Mechanics, All (leadmen - $0.50 Per Hour Over Mechanic)	$50.94	7A	1T	8P
Whatcom	Power Equipment Operators	Mixers: Asphalt Plant	$49.90	7A	1T	8P
Whatcom	Power Equipment Operators	Motor Patrol Grader - Non-finishing	$49.48	7A	1T	8P
Whatcom	Power Equipment Operators	Motor Patrol Graders, Finishing	$50.39	7A	1T	8P
Whatcom	Power Equipment Operators	Mucking Machine, Mole, Tunnel Drill, Boring, Road Header And/or Shield	$50.39	7A	1T	8P
Whatcom	Power Equipment Operators	Oil Distributors, Blower Distribution & Mulch Seeding Operator	$47.12	7A	1T	8P
Whatcom	Power Equipment Operators	Outside Hoists (elevators And Manlifts), Air Tuggers,strato	$49.48	7A	1T	8P
Whatcom	Power Equipment Operators	Overhead, Bridge Type: 45 Tons Through 99 Tons	$50.39	7A	1T	8P
Whatcom	Power Equipment Operators	Pavement Breaker	$47.12	7A	1T	8P
Whatcom	Power Equipment Operators	Pile Driver (other Than Crane Mount)	$49.90	7A	1T	8P
Whatcom	Power Equipment Operators	Plant Oiler - Asphalt, Crusher	$49.48	7A	1T	8P
Whatcom	Power Equipment Operators	Posthole Digger, Mechanical	$47.12	7A	1T	8P
Whatcom	Power Equipment Operators	Power Plant	$47.12	7A	1T	8P
Whatcom	Power Equipment Operators	Pumps - Water	$47.12	7A	1T	8P
Whatcom	Power Equipment Operators	Quick Tower - No Cab, Under 100 Feet In Height Based To Boom	$47.12	7A	1T	8P
Whatcom	Power Equipment Operators	Remote Control Operator On Rubber Tired Earth Moving Equipment	$50.39	7A	1T	8P
Whatcom	Power Equipment Operators	Rigger And Bellman	$47.12	7A	1T	8P
Whatcom	Power Equipment Operators	Rollagon	$50.39	7A	1T	8P
Whatcom	Power Equipment Operators	Roller, Other Than Plant Mix	$47.12	7A	1T	8P
Whatcom	Power Equipment Operators	Roller, Plant Mix Or Multi-lift Materials	$49.48	7A	1T	8P
Whatcom	Power Equipment Operators	Roto-mill, Roto-grinder	$49.90	7A	1T	8P
Whatcom	Power Equipment Operators	Saws - Concrete	$49.48	7A	1T	8P
Whatcom	Power Equipment Operators	Scraper, Self Propelled Under 45 Yards	$49.90	7A	1T	8P
Whatcom	Power Equipment Operators	Scrapers - Concrete & Carry All	$49.48	7A	1T	8P
Whatcom	Power Equipment Operators	Scrapers, Self-propelled: 45 Yards And Over	$50.39	7A	1T	8P
Whatcom	Power Equipment Operators	Service Engineers - Equipment	$49.48	7A	1T	8P
Whatcom	Power Equipment Operators	Shotcrete/gunite Equipment	$47.12	7A	1T	8P
Whatcom	Power Equipment Operators	Shovel , Excavator, Backhoe, Tractors Under 15 Metric Tons.	$49.48	7A	1T	8P
Whatcom	Power Equipment Operators	Shovel, Excavator, Backhoe: Over 30 Metric Tons To 50	$50.39	7A	1T	8P

		Metric Tons				
Whatcom	Power Equipment Operators	Shovel, Excavator, Backhoes, Tractors: 15 To 30 Metric Tons	$49.90	7A	1T	8P
Whatcom	Power Equipment Operators	Shovel, Excavator, Backhoes: Over 50 Metric Tons To 90 Metric Tons	$50.94	7A	1T	8P
Whatcom	Power Equipment Operators	Shovel, Excavator, Backhoes: Over 90 Metric Tons	$51.51	7A	1T	8P
Whatcom	Power Equipment Operators	Slipform Pavers	$50.39	7A	1T	8P
Whatcom	Power Equipment Operators	Spreader, Topsider & Screedman	$50.39	7A	1T	8P
Whatcom	Power Equipment Operators	Subgrader Trimmer	$49.90	7A	1T	8P
Whatcom	Power Equipment Operators	Tower Bucket Elevators	$49.48	7A	1T	8P
Whatcom	Power Equipment Operators	Tower Crane Over 175'in Height, Base To Boom	$51.51	7A	1T	8P
Whatcom	Power Equipment Operators	Tower Crane Up To 175' In Height Base To Boom	$50.94	7A	1T	8P
Whatcom	Power Equipment Operators	Transporters, All Track Or Truck Type	$50.39	7A	1T	8P
Whatcom	Power Equipment Operators	Trenching Machines	$49.48	7A	1T	8P
Whatcom	Power Equipment Operators	Truck Crane Oiler/driver - 100 Tons And Over	$49.90	7A	1T	8P
Whatcom	Power Equipment Operators	Truck Crane Oiler/driver Under 100 Tons	$49.48	7A	1T	8P
Whatcom	Power Equipment Operators	Truck Mount Portable Conveyor	$49.90	7A	1T	8P
Whatcom	Power Equipment Operators	Welder	$50.39	7A	1T	8P
Whatcom	Power Equipment Operators	Wheel Tractors, Farmall Type	$47.12	7A	1T	8P
Whatcom	Power Equipment Operators	Yo Yo Pay Dozer	$49.90	7A	1T	8P
Whatcom	Power Equipment Operators-Underground Sewer & Water	Asphalt Plant Operators	$50.39	7A	1T	8P
Whatcom	Power Equipment Operators-Underground Sewer & Water	Assistant Engineer	$47.12	7A	1T	8P
Whatcom	Power Equipment Operators-Underground Sewer & Water	Barrier Machine (zipper)	$49.90	7A	1T	8P
Whatcom	Power Equipment Operators-Underground Sewer & Water	Batch Plant Operator, Concrete	$49.90	7A	1T	8P
Whatcom	Power Equipment Operators-Underground Sewer & Water	Bobcat	$47.12	7A	1T	8P
Whatcom	Power Equipment Operators-Underground Sewer & Water	Brokk - Remote Demolition Equipment	$47.12	7A	1T	8P
Whatcom	Power Equipment Operators-Underground Sewer & Water	Brooms	$47.12	7A	1T	8P
Whatcom	Power Equipment Operators-Underground Sewer & Water	Bump Cutter	$49.90	7A	1T	8P
Whatcom	Power Equipment Operators-Underground Sewer & Water	Cableways	$50.39	7A	1T	8P
Whatcom	Power Equipment Operators-Underground Sewer & Water	Chipper	$49.90	7A	1T	8P

Whatcom	Power Equipment Operators-Underground Sewer & Water	Compressor	$47.12	7A	1T	8P
Whatcom	Power Equipment Operators-Underground Sewer & Water	Concrete Pump: Truck Mount With Boom Attachment Over 42 M	$50.39	7A	1T	8P
Whatcom	Power Equipment Operators-Underground Sewer & Water	Concrete Finish Machine -laser Screed	$47.12	7A	1T	8P
Whatcom	Power Equipment Operators-Underground Sewer & Water	Concrete Pump - Mounted Or Trailer High Pressure Line Pump, Pump High Pressure.	$49.48	7A	1T	8P
Whatcom	Power Equipment Operators-Underground Sewer & Water	Concrete Pump: Truck Mount With Boom Attachment Up To 42m	$49.90	7A	1T	8P
Whatcom	Power Equipment Operators-Underground Sewer & Water	Conveyors	$49.48	7A	1T	8P
Whatcom	Power Equipment Operators-Underground Sewer & Water	Cranes: 20 Tons Through 44 Tons With Attachments Overhead, Bridge Type Crane: 20 Tons Through 44 Tons	$49.90	7A	1T	8P
Whatcom	Power Equipment Operators-Underground Sewer & Water	Cranes: 200 Tons To 300 Tons, Or 250' Of Boom (including Jib With Attachments)	$51.51	7A	1T	8P
Whatcom	Power Equipment Operators-Underground Sewer & Water	Cranes: 45 Tons Through 99 Tons, Under 150' Of Boom (including Jib With Attachments)	$50.39	7A	1T	8P
Whatcom	Power Equipment Operators-Underground Sewer & Water	Cranes: A-frame - 10 Tons And Under	$47.12	7A	1T	8P
Whatcom	Power Equipment Operators-Underground Sewer & Water	Cranes: Friction 100 Tons Through 199 Tons	$51.51	7A	1T	8P
Whatcom	Power Equipment Operators-Underground Sewer & Water	Cranes: Friction Over 200 Tons	$52.07	7A	1T	8P
Whatcom	Power Equipment Operators-Underground Sewer & Water	Cranes: Over 300 Tons Or 300' Of Boom (including Jib With Attachments)	$52.07	7A	1T	8P
Whatcom	Power Equipment Operators-Underground Sewer & Water	Cranes: Through 19 Tons With Attachments A-frame Over 10 Tons	$49.48	7A	1T	8P
Whatcom	Power Equipment Operators-Underground Sewer & Water	Crusher	$49.90	7A	1T	8P
Whatcom	Power Equipment Operators-Underground Sewer & Water	Deck Engineer/deck Winches (power)	$49.90	7A	1T	8P
Whatcom	Power Equipment Operators-Underground Sewer & Water	Derricks, On Building Work	$50.39	7A	1T	8P
Whatcom	Power Equipment Operators-Underground Sewer & Water	Dozer Quad 9, HD 41, D10 and Over	$50.39	7A	1T	8P
Whatcom	Power Equipment Operators-Underground Sewer & Water	Dozers D-9 & Under	$49.48	7A	1T	8P
Whatcom	Power Equipment Operators-Underground Sewer & Water	Drill Oilers: Auger Type, Truck Or Crane Mount	$49.48	7A	1T	8P
Whatcom	Power Equipment Operators-	Drilling Machine	$49.90	7A	1T	8P

	Underground Sewer & Water					
Whatcom	Power Equipment Operators-Underground Sewer & Water	Elevator And Man-lift: Permanent And Shaft Type	$47.12	7A	1T	8P
Whatcom	Power Equipment Operators-Underground Sewer & Water	Finishing Machine, Bidwell And Gamaco & Similar Equipment	$49.90	7A	1T	8P
Whatcom	Power Equipment Operators-Underground Sewer & Water	Forklift: 3000 Lbs And Over With Attachments	$49.48	7A	1T	8P
Whatcom	Power Equipment Operators-Underground Sewer & Water	Forklifts: Under 3000 Lbs. With Attachments	$47.12	7A	1T	8P
Whatcom	Power Equipment Operators-Underground Sewer & Water	Grade Engineer: Using Blue Prints, Cut Sheets, Etc	$49.90	7A	1T	8P
Whatcom	Power Equipment Operators-Underground Sewer & Water	Gradechecker/stakeman	$47.12	7A	1T	8P
Whatcom	Power Equipment Operators-Underground Sewer & Water	Guardrail Punch/Auger	$49.90	7A	1T	8P
Whatcom	Power Equipment Operators-Underground Sewer & Water	Hard Tail End Dump Articulating Off- Road Equipment 45 Yards. & Over	$50.39	7A	1T	8P
Whatcom	Power Equipment Operators-Underground Sewer & Water	Hard Tail End Dump Articulating Off-road Equipment Under 45 Yards	$49.90	7A	1T	8P
Whatcom	Power Equipment Operators-Underground Sewer & Water	Horizontal/directional Drill Locator	$49.48	7A	1T	8P
Whatcom	Power Equipment Operators-Underground Sewer & Water	Horizontal/directional Drill Operator	$49.90	7A	1T	8P
Whatcom	Power Equipment Operators-Underground Sewer & Water	Hydralifts/boom Trucks Over 10 Tons	$49.48	7A	1T	8P
Whatcom	Power Equipment Operators-Underground Sewer & Water	Hydralifts/boom Trucks, 10 Tons And Under	$47.12	7A	1T	8P
Whatcom	Power Equipment Operators-Underground Sewer & Water	Loader, Overhead 8 Yards. & Over	$50.94	7A	1T	8P
Whatcom	Power Equipment Operators-Underground Sewer & Water	Loader, Overhead, 6 Yards. But Not Including 8 Yards	$50.39	7A	1T	8P
Whatcom	Power Equipment Operators-Underground Sewer & Water	Loaders, Overhead Under 6 Yards	$49.90	7A	1T	8P
Whatcom	Power Equipment Operators-Underground Sewer & Water	Loaders, Plant Feed	$49.90	7A	1T	8P
Whatcom	Power Equipment Operators-Underground Sewer & Water	Loaders: Elevating Type Belt	$49.48	7A	1T	8P
Whatcom	Power Equipment Operators-Underground Sewer & Water	Locomotives, All	$49.90	7A	1T	8P
Whatcom	Power Equipment Operators-Underground Sewer & Water	Material Transfer Device	$49.90	7A	1T	8P
Whatcom	Power Equipment Operators-Underground Sewer & Water	Mechanics, All (leadmen - $0.50 Per Hour Over Mechanic)	$50.94	7A	1T	8P
Whatcom	Power Equipment Operators-Underground Sewer & Water	Mixers: Asphalt Plant	$49.90	7A	1T	8P
Whatcom	Power Equipment Operators-Underground Sewer & Water	Motor Patrol Grader - Non-finishing	$49.48	7A	1T	8P
Whatcom	Power Equipment Operators-	Motor Patrol Graders, Finishing	$50.39	7A	1T	8P

	Underground Sewer & Water					
Whatcom	Power Equipment Operators-Underground Sewer & Water	Mucking Machine, Mole, Tunnel Drill, Boring, Road Header And/or Shield	$50.39	7A	1T	8P
Whatcom	Power Equipment Operators-Underground Sewer & Water	Oil Distributors, Blower Distribution & Mulch Seeding Operator	$47.12	7A	1T	8P
Whatcom	Power Equipment Operators-Underground Sewer & Water	Outside Hoists (elevators And Manlifts), Air Tuggers,strato	$49.48	7A	1T	8P
Whatcom	Power Equipment Operators-Underground Sewer & Water	Overhead, Bridge Type: 45 Tons Through 99 Tons	$50.39	7A	1T	8P
Whatcom	Power Equipment Operators-Underground Sewer & Water	Pavement Breaker	$47.12	7A	1T	8P
Whatcom	Power Equipment Operators-Underground Sewer & Water	Pile Driver (other Than Crane Mount)	$49.90	7A	1T	8P
Whatcom	Power Equipment Operators-Underground Sewer & Water	Plant Oiler - Asphalt, Crusher	$49.48	7A	1T	8P
Whatcom	Power Equipment Operators-Underground Sewer & Water	Posthole Digger, Mechanical	$47.12	7A	1T	8P
Whatcom	Power Equipment Operators-Underground Sewer & Water	Power Plant	$47.12	7A	1T	8P
Whatcom	Power Equipment Operators-Underground Sewer & Water	Pumps - Water	$47.12	7A	1T	8P
Whatcom	Power Equipment Operators-Underground Sewer & Water	Quick Tower - No Cab, Under 100 Feet In Height Based To Boom	$47.12	7A	1T	8P
Whatcom	Power Equipment Operators-Underground Sewer & Water	Remote Control Operator On Rubber Tired Earth Moving Equipment	$50.39	7A	1T	8P
Whatcom	Power Equipment Operators-Underground Sewer & Water	Rigger And Bellman	$47.12	7A	1T	8P
Whatcom	Power Equipment Operators-Underground Sewer & Water	Rollagon	$50.39	7A	1T	8P
Whatcom	Power Equipment Operators-Underground Sewer & Water	Roller, Other Than Plant Mix	$47.12	7A	1T	8P
Whatcom	Power Equipment Operators-Underground Sewer & Water	Roller, Plant Mix Or Multi-lift Materials	$49.48	7A	1T	8P
Whatcom	Power Equipment Operators-Underground Sewer & Water	Roto-mill, Roto-grinder	$49.90	7A	1T	8P
Whatcom	Power Equipment Operators-Underground Sewer & Water	Saws - Concrete	$49.48	7A	1T	8P
Whatcom	Power Equipment Operators-Underground Sewer & Water	Scraper, Self Propelled Under 45 Yards	$49.90	7A	1T	8P
Whatcom	Power Equipment Operators-Underground Sewer & Water	Scrapers - Concrete & Carry All	$49.48	7A	1T	8P
Whatcom	Power Equipment Operators-Underground Sewer & Water	Scrapers, Self-propelled: 45 Yards And Over	$50.39	7A	1T	8P
Whatcom	Power Equipment Operators-Underground Sewer & Water	Service Engineers - Equipment	$49.48	7A	1T	8P
Whatcom	Power Equipment Operators-	Shotcrete/gunite Equipment	$47.12	7A	1T	8P

	Underground Sewer & Water					
Whatcom	Power Equipment Operators-Underground Sewer & Water	Shovel , Excavator, Backhoe, Tractors Under 15 Metric Tons.	$49.48	7A	1T	8P
Whatcom	Power Equipment Operators-Underground Sewer & Water	Shovel, Excavator, Backhoe: Over 30 Metric Tons To 50 Metric Tons	$50.39	7A	1T	8P
Whatcom	Power Equipment Operators-Underground Sewer & Water	Shovel, Excavator, Backhoes, Tractors: 15 To 30 Metric Tons	$49.90	7A	1T	8P
Whatcom	Power Equipment Operators-Underground Sewer & Water	Shovel, Excavator, Backhoes: Over 50 Metric Tons To 90 Metric Tons	$50.94	7A	1T	8P
Whatcom	Power Equipment Operators-Underground Sewer & Water	Shovel, Excavator, Backhoes: Over 90 Metric Tons	$51.51	7A	1T	8P
Whatcom	Power Equipment Operators-Underground Sewer & Water	Slipform Pavers	$50.39	7A	1T	8P
Whatcom	Power Equipment Operators-Underground Sewer & Water	Spreader, Topsider & Screedman	$50.39	7A	1T	8P
Whatcom	Power Equipment Operators-Underground Sewer & Water	Subgrader Trimmer	$49.90	7A	1T	8P
Whatcom	Power Equipment Operators-Underground Sewer & Water	Tower Bucket Elevators	$49.48	7A	1T	8P
Whatcom	Power Equipment Operators-Underground Sewer & Water	Tower Crane Over 175'in Height, Base To Boom	$51.51	7A	1T	8P
Whatcom	Power Equipment Operators-Underground Sewer & Water	Tower Crane Up To 175' In Height Base To Boom	$50.94	7A	1T	8P
Whatcom	Power Equipment Operators-Underground Sewer & Water	Transporters, All Track Or Truck Type	$50.39	7A	1T	8P
Whatcom	Power Equipment Operators-Underground Sewer & Water	Trenching Machines	$49.48	7A	1T	8P
Whatcom	Power Equipment Operators-Underground Sewer & Water	Truck Crane Oiler/driver - 100 Tons And Over	$49.90	7A	1T	8P
Whatcom	Power Equipment Operators-Underground Sewer & Water	Truck Crane Oiler/driver Under 100 Tons	$49.48	7A	1T	8P
Whatcom	Power Equipment Operators-Underground Sewer & Water	Truck Mount Portable Conveyor	$49.90	7A	1T	8P
Whatcom	Power Equipment Operators-Underground Sewer & Water	Welder	$50.39	7A	1T	8P
Whatcom	Power Equipment Operators-Underground Sewer & Water	Wheel Tractors, Farmall Type	$47.12	7A	1T	8P
Whatcom	Power Equipment Operators-Underground Sewer & Water	Yo Yo Pay Dozer	$49.90	7A	1T	8P
Whatcom	Power Line Clearance Tree Trimmers	Journey Level In Charge	$42.91	5A	4A	
Whatcom	Power Line Clearance Tree Trimmers	Spray Person	$40.73	5A	4A	
Whatcom	Power Line Clearance Tree Trimmers	Tree Equipment Operator	$41.29	5A	4A	
Whatcom	Power Line Clearance Tree Trimmers	Tree Trimmer	$38.38	5A	4A	
Whatcom	Power Line Clearance Tree	Tree Trimmer Groundperson	$28.95	5A	4A	

	Trimmers					
Whatcom	Refrigeration & Air Conditioning Mechanics	Journey Level	$23.95		1	
Whatcom	Residential Brick Mason	Journey Level	$48.27	5A	1M	
Whatcom	Residential Carpenters	Journey Level	$23.81		1	
Whatcom	Residential Cement Masons	Journey Level	$27.28		1	
Whatcom	Residential Drywall Applicators	Journey Level	$25.00		1	
Whatcom	Residential Drywall Tapers	Journey Level	$23.91		1	
Whatcom	Residential Electricians	Journey Level	$37.65		1	
Whatcom	Residential Glaziers	Journey Level	$13.79		1	
Whatcom	Residential Insulation Applicators	Journey Level	$13.96		1	
Whatcom	Residential Laborers	Journey Level	$20.00		1	
Whatcom	Residential Marble Setters	Journey Level	$48.27	5A	1M	
Whatcom	Residential Painters	Journey Level	$17.43		1	
Whatcom	Residential Plumbers & Pipefitters	Journey Level	$28.26		1	
Whatcom	Residential Refrigeration & Air Conditioning Mechanics	Journey Level	$38.78	5A	1G	
Whatcom	Residential Sheet Metal Workers	Journey Level (Field or Shop)	$30.74	7J	1I	
Whatcom	Residential Soft Floor Layers	Journey Level	$23.46		1	
Whatcom	Residential Sprinkler Fitters (Fire Protection)	Journey Level	$31.09		1	
Whatcom	Residential Stone Masons	Journey Level	$48.27	5A	1M	
Whatcom	Residential Terrazzo Workers	Journey Level	$9.04		1	
Whatcom	Residential Terrazzo/Tile Finishers	Journey Level	$14.00		1	
Whatcom	Residential Tile Setters	Journey Level	$9.04		1	
Whatcom	Roofers	Journey Level	$25.27		1	
Whatcom	Sheet Metal Workers	Journey Level (Field or Shop)	$55.15	7F	1E	
Whatcom	Shipbuilding & Ship Repair	Boilermaker	$35.83	7M	1H	
Whatcom	Shipbuilding & Ship Repair	Carpenter	$15.16		1	
Whatcom	Shipbuilding & Ship Repair	Crane Operator	$16.04		1	
Whatcom	Shipbuilding & Ship Repair	Electrician	$15.18		1	
Whatcom	Shipbuilding & Ship Repair	Heat & Frost Insulator	$55.68	5J	1S	
Whatcom	Shipbuilding & Ship Repair	Inside Machinist	$16.70		1	
Whatcom	Shipbuilding & Ship Repair	Laborer	$23.38		1	
Whatcom	Shipbuilding & Ship Repair	Outside Machinist	$14.69		1	
Whatcom	Shipbuilding & Ship Repair	Painter	$15.16		1	
Whatcom	Shipbuilding & Ship Repair	Pipefitter	$15.18		1	
Whatcom	Shipbuilding & Ship Repair	Sheet Metal	$20.26		1	
Whatcom	Shipbuilding & Ship Repair	Welder/burner	$15.21		1	
Whatcom	Sign Makers & Installers (Electrical)	Journey Level	$16.03		1	
Whatcom	Sign Makers & Installers (Non-	Journey Level	$14.23		1	

	Electrical)					
Whatcom	Soft Floor Layers	Journey Level	$41.95	5A	2Z	
Whatcom	Solar Controls For Windows	Journey Level	$9.04		1	
Whatcom	Sprinkler Fitters (Fire Protection)	Journey Level	$35.06		1	
Whatcom	Stage Rigging Mechanics (Non Structural)	Journey Level	$13.23		1	
Whatcom	Stone Masons	Journey Level	$48.27	5A	1M	
Whatcom	Street And Parking Lot Sweeper Workers	Journey Level	$15.00		1	
Whatcom	Surveyors	All Classifications	$36.16	Null	1	
Whatcom	Telecommunication Technicians	Journey Level	$36.82	7E	1E	
Whatcom	Telephone Line Construction - Outside	Cable Splicer	$34.20	5A	2B	
Whatcom	Telephone Line Construction - Outside	Hole Digger/Ground Person	$18.72	5A	2B	
Whatcom	Telephone Line Construction - Outside	Installer (Repairer)	$32.78	5A	2B	
Whatcom	Telephone Line Construction - Outside	Special Aparatus Installer I	$34.20	5A	2B	
Whatcom	Telephone Line Construction - Outside	Special Apparatus Installer II	$33.51	5A	2B	
Whatcom	Telephone Line Construction - Outside	Telephone Equipment Operator (Heavy)	$34.21	5A	2B	
Whatcom	Telephone Line Construction - Outside	Telephone Equipment Operator (Light)	$31.81	5A	2B	
Whatcom	Telephone Line Construction - Outside	Telephone Lineperson	$31.81	5A	2B	
Whatcom	Telephone Line Construction - Outside	Television Groundperson	$18.16	5A	2B	
Whatcom	Telephone Line Construction - Outside	Television Lineperson/Installer	$24.09	5A	2B	
Whatcom	Telephone Line Construction - Outside	Television System Technician	$28.72	5A	2B	
Whatcom	Telephone Line Construction - Outside	Television Technician	$25.81	5A	2B	
Whatcom	Telephone Line Construction - Outside	Tree Trimmer	$31.82	5A	2B	
Whatcom	Terrazzo Workers	Journey Level	$43.93	5A	1M	
Whatcom	Tile Setters	Journey Level	$43.93	5A	1M	
Whatcom	Tile, Marble & Terrazzo Finishers	Finisher	$37.76	5A	1B	
Whatcom	Traffic Control Stripers	Journey Level	$17.41		1	
Whatcom	Truck Drivers	Asphalt Mix	$30.15		1	
Whatcom	Truck Drivers	Dump Truck	$19.32		1	
Whatcom	Truck Drivers	Dump Truck And Trailer	$19.32		1	
Whatcom	Truck Drivers	Other Trucks	$14.48		1	

Whatcom	Truck Drivers	Transit Mixer	$16.81		1	
Whatcom	Well Drillers & Irrigation Pump Installers	Irrigation Pump Installer	$15.00		1	
Whatcom	Well Drillers & Irrigation Pump Installers	Oiler	$9.04		1	
Whatcom	Well Drillers & Irrigation Pump Installers	Well Driller	$18.02		1	

BENEFIT CODE KEY - EFFECTIVE 03-02-2012 THRU 08-30-2012

****

OVERTIME CODES

OVERTIME CALCULATIONS ARE BASED ON THE HOURLY RATE ACTUALLY PAID TO THE WORKER. ON PUBLIC WORKS PROJECTS, THE HOURLY RATE MUST BE NOT LESS THAN THE PREVAILING RATE OF WAGE MINUS THE HOURLY RATE OF THE COST OF FRINGE BENEFITS ACTUALLY PROVIDED FOR THE WORKER.

1. ALL HOURS WORKED IN EXCESS OF EIGHT (8) HOURS PER DAY OR FORTY (40) HOURS PER WEEK SHALL BE PAID AT ONE AND ONE-HALF TIMES THE HOURLY RATE OF WAGE.

B. ALL HOURS WORKED ON SATURDAYS SHALL BE PAID AT ONE AND ONE-HALF TIMES THE HOURLY RATE OF WAGE. ALL HOURS WORKED ON SUNDAYS AND HOLIDAYS SHALL BE PAID AT DOUBLE THE HOURLY RATE OF WAGE.

C. THE FIRST TWO (2) HOURS AFTER EIGHT (8) REGULAR HOURS MONDAY THROUGH FRIDAY AND THE FIRST TEN (10) HOURS ON SATURDAY SHALL BE PAID AT ONE AND ONE-HALF TIMES THE HOURLY RATE OF WAGE. ALL OTHER OVERTIME HOURS AND ALL HOURS WORKED ON SUNDAYS AND HOLIDAYS SHALL BE PAID AT DOUBLE THE HOURLY RATE OF WAGE.

D. THE FIRST TWO (2) HOURS BEFORE OR AFTER A FIVE - EIGHT (8) HOUR WORKWEEK DAY OR A FOUR - TEN (10) HOUR WORKWEEK DAY AND THE FIRST EIGHT (8) HOURS WORKED THE NEXT DAY AFTER EITHER WORKWEEK SHALL BE PAID AT ONE AND ONE-HALF TIMES THE HOURLY RATE OF WAGE. ALL ADDITIONAL HOURS WORKED AND ALL WORKED ON SUNDAYS AND HOLIDAYS SHALL BE PAID AT DOUBLE THE HOURLY RATE OF WAGE.

E. THE FIRST TWO (2) HOURS AFTER EIGHT (8) REGULAR HOURS MONDAY THROUGH FRIDAY AND THE FIRST EIGHT (8) HOURS ON SATURDAY SHALL BE PAID AT ONE AND ONE-HALF TIMES THE HOURLY RATE OF WAGE. ALL OTHER HOURS WORKED MONDAY THROUGH SATURDAY, AND ALL HOURS WORKED ON SUNDAYS AND HOLIDAYS SHALL BE PAID AT DOUBLE THE HOURLY RATE OF WAGE.

F. THE FIRST TWO (2) HOURS AFTER EIGHT (8) REGULAR HOURS MONDAY THROUGH FRIDAY AND THE FIRST TEN (10) HOURS ON SATURDAY SHALL BE PAID AT ONE AND ONE-HALF TIMES THE HOURLY RATE OF WAGE. ALL OTHER OVERTIME HOURS WORKED, EXCEPT LABOR DAY, SHALL BE PAID AT DOUBLE THE HOURLY RATE OF WAGE. ALL HOURS WORKED ON LABOR DAY SHALL BE PAID AT THREE TIMES THE HOURLY RATE OF WAGE.

G. THE FIRST TEN (10) HOURS WORKED ON SATURDAYS AND THE FIRST TEN (10) HOURS WORKED ON A FIFTH CALENDAR WEEKDAY IN A FOUR - TEN HOUR SCHEDULE, SHALL BE PAID AT ONE AND ONE-HALF TIMES THE HOURLY RATE OF WAGE. ALL HOURS WORKED IN EXCESS OF TEN (10) HOURS PER DAY MONDAY THROUGH SATURDAY AND ALL HOURS WORKED ON SUNDAYS AND HOLIDAYS SHALL BE PAID AT DOUBLE THE HOURLY RATE OF WAGE.

H. ALL HOURS WORKED ON SATURDAYS (EXCEPT MAKEUP DAYS IF WORK IS LOST DUE TO INCLEMENT WEATHER CONDITIONS OR EQUIPMENT BREAKDOWN) SHALL BE PAID AT ONE AND ONE-HALF TIMES THE HOURLY RATE OF WAGE. ALL HOURS WORKED MONDAY THROUGH SATURDAY OVER TWELVE (12) HOURS AND ALL HOURS WORKED ON SUNDAYS AND HOLIDAYS SHALL BE PAID AT DOUBLE THE HOURLY RATE OF WAGE.

I. ALL HOURS WORKED ON SUNDAYS AND HOLIDAYS SHALL ALSO BE PAID AT ONE AND DOUBLE THE HOURLY RATE OF WAGE.

J. THE FIRST TWO (2) HOURS AFTER EIGHT (8) REGULAR HOURS MONDAY THROUGH FRIDAY AND THE FIRST TEN (10) HOURS ON SATURDAY SHALL BE PAID AT ONE AND ONE-HALF TIMES THE HOURLY RATE OF WAGE. ALL HOURS WORKED OVER TEN (10) HOURS MONDAY THROUGH SATURDAY, SUNDAYS AND HOLIDAYS SHALL BE PAID AT DOUBLE THE HOURLY RATE OF WAGE.

K. ALL HOURS WORKED ON SATURDAYS AND SUNDAYS SHALL BE PAID AT ONE AND ONE-HALF TIMES THE HOURLY RATE OF WAGE. ALL HOURS WORKED ON HOLIDAYS SHALL BE PAID AT DOUBLE THE HOURLY RATE OF WAGE.

L. ALL HOURS WORKED IN EXCESS OF TEN (10) HOURS PER DAY MONDAY THROUGH SATURDAY AND ALL HOURS WORKED ON SUNDAYS AND HOLIDAYS SHALL BE PAID AT DOUBLE THE HOURLY RATE OF WAGE.

M. ALL HOURS WORKED ON SATURDAYS (EXCEPT MAKEUP DAYS IF WORK IS LOST DUE TO INCLEMENT WEATHER CONDITIONS) SHALL BE PAID AT ONE AND ONE-HALF TIMES THE HOURLY RATE OF WAGE. ALL HOURS WORKED ON SUNDAYS AND HOLIDAYS SHALL BE PAID AT DOUBLE THE HOURLY RATE OF WAGE.

N. ALL HOURS WORKED ON SATURDAYS (EXCEPT MAKEUP DAYS) SHALL BE PAID AT ONE AND ONE-HALF TIMES THE HOURLY RATE OF WAGE. ALL HOURS WORKED ON SUNDAYS AND HOLIDAYS SHALL BE PAID AT DOUBLE THE HOURLY RATE OF WAGE.

1. O. THE FIRST TEN (10) HOURS WORKED ON SATURDAY SHALL BE PAID AT ONE AND ONE-HALF TIMES THE HOURLY RATE OF WAGE. ALL HOURS WORKED ON SUNDAYS, HOLIDAYS AND AFTER TWELVE (12) HOURS, MONDAY THROUGH FRIDAY, AND AFTER TEN (10) HOURS ON SATURDAY SHALL BE PAID AT DOUBLE THE HOURLY RATE OF WAGE.

P. ALL HOURS WORKED ON SATURDAYS (EXCEPT MAKEUP DAYS IF CIRCUMSTANCES WARRANT) AND SUNDAYS SHALL BE PAID AT ONE AND ONE-HALF TIMES THE HOURLY RATE OF WAGE. ALL HOURS WORKED ON HOLIDAYS SHALL BE PAID AT DOUBLE THE HOURLY RATE OF WAGE.

Q. THE FIRST TWO (2) HOURS AFTER EIGHT (8) REGULAR HOURS MONDAY THROUGH FRIDAY AND UP TO TEN (10) HOURS WORKED ON SATURDAYS SHALL BE PAID AT ONE AND ONE-HALF TIMES THE HOURLY RATE OF WAGE. ALL HOURS WORKED IN EXCESS OF TEN (10) HOURS PER DAY MONDAY THROUGH SATURDAY AND ALL HOURS WORKED ON SUNDAYS AND HOLIDAYS (EXCEPT CHRISTMAS DAY) SHALL BE PAID AT DOUBLE THE HOURLY RATE OF WAGE. ALL HOURS WORKED ON CHRISTMAS DAY SHALL BE PAID AT TWO AND ONE-HALF TIMES THE HOURLY RATE OF WAGE.

R. ALL HOURS WORKED ON SUNDAYS AND HOLIDAYS SHALL BE PAID AT TWO TIMES THE HOURLY RATE OF WAGE.

S. THE FIRST TWO (2) HOURS AFTER EIGHT (8) REGULAR HOURS MONDAY THROUGH FRIDAY AND THE FIRST EIGHT (8) HOURS ON SATURDAY SHALL BE PAID AT ONE AND ONE-HALF TIMES THE HOURLY RATE OF WAGE. ALL HOURS WORKED ON HOLIDAYS AND ALL OTHER OVERTIME HOURS WORKED, EXCEPT LABOR DAY, SHALL BE PAID AT DOUBLE THE HOURLY RATE OF WAGE. ALL HOURS WORKED ON LABOR DAY SHALL BE PAID AT THREE TIMES THE HOURLY RATE OF WAGE.

T. WORK PERFORMED IN EXCESS OF EIGHT (8) HOURS OF STRAIGHT TIME PER DAY, OR TEN (10) HOURS OF STRAIGHT TIME PER DAY WHEN FOUR TEN (10) HOUR SHIFTS ARE ESTABLISHED, OR FORTY (40) HOURS OF STRAIGHT TIME PER WEEK, MONDAY THROUGH FRIDAY, OR OUTSIDE THE NORMAL SHIFT, AND ALL WORK ON SATURDAYS SHALL BE PAID AT TIME AND ONE-HALF THE STRAIGHT TIME RATE. HOURS WORKED OVER TWELVE HOURS (12) IN A SINGLE SHIFT AND ALL WORK PERFORMED AFTER 6:00 PM SATURDAY TO 6:00 AM MONDAY AND HOLIDAYS SHALL BE PAID AT DOUBLE THE STRAIGHT TIME RATE OF PAY. THE EMPLOYER SHALL HAVE THE SOLE DISCRETION TO ASSIGN OVERTIME WORK TO EMPLOYEES. PRIMARY CONSIDERATION FOR OVERTIME WORK SHALL BE GIVEN TO EMPLOYEES REGULARLY ASSIGNED TO THE WORK TO BE PERFORMED ON OVERTIME SITUATIONS. AFTER AN EMPLOYEE HAS WORKED EIGHT (8) HOURS AT AN APPLICABLE OVERTIME RATE, ALL ADDITIONAL HOURS SHALL BE AT THE APPLICABLE OVERTIME RATE UNTIL SUCH TIME AS THE EMPLOYEE HAS HAD A BREAK OF EIGHT (8) HOURS OR MORE.

U. ALL HOURS WORKED ON SATURDAYS SHALL BE PAID AT ONE AND ONE-HALF TIMES THE HOURLY RATE OF WAGE. ALL HOURS WORKED ON SUNDAYS AND HOLIDAYS (EXCEPT LABOR DAY) SHALL BE PAID AT TWO TIMES THE HOURLY RATE OF WAGE. ALL HOURS WORKED ON LABOR DAY SHALL BE PAID AT THREE TIMES THE HOURLY RATE OF WAGE.

V. ALL HOURS WORKED ON SUNDAYS AND HOLIDAYS (EXCEPT THANKSGIVING DAY AND CHRISTMAS DAY) SHALL BE PAID AT ONE AND ONE-HALF TIMES THE HOURLY RATE OF WAGE. ALL HOURS WORKED ON THANKSGIVING DAY AND CHRISTMAS DAY SHALL BE PAID AT DOUBLE THE HOURLY RATE OF WAGE.

W. ALL HOURS WORKED ON SATURDAYS AND SUNDAYS (EXCEPT MAKE-UP DAYS DUE TO CONDITIONS BEYOND THE CONTROL OF THE EMPLOYER)) SHALL BE PAID AT ONE AND ONE-HALF TIMES THE HOURLY RATE OF WAGE. ALL HOURS WORKED ON HOLIDAYS SHALL BE PAID AT DOUBLE THE HOURLY RATE OF WAGE.

X. THE FIRST FOUR (4) HOURS AFTER EIGHT (8) REGULAR HOURS MONDAY THROUGH FRIDAY AND THE FIRST TWELVE (12) HOURS ON SATURDAY SHALL BE PAID AT ONE AND ONE-HALF TIMES THE HOURLY RATE OF WAGE. ALL HOURS WORKED OVER TWELVE (12) HOURS MONDAY THROUGH SATURDAY, SUNDAYS AND HOLIDAYS SHALL BE PAID AT DOUBLE THE HOURLY RATE OF WAGE. WHEN HOLIDAY FALLS ON SATURDAY OR SUNDAY, THE DAY BEFORE SATURDAY, FRIDAY, AND THE DAY AFTER SUNDAY, MONDAY, SHALL BE CONSIDERED THE HOLIDAY AND ALL WORK PERFORMED SHALL BE PAID AT DOUBLE THE HOURLY RATE OF WAGE.

Y. ALL HOURS WORKED OUTSIDE THE HOURS OF 5:00 AM AND 5:00 PM (OR SUCH OTHER HOURS AS MAY BE AGREED UPON BY ANY EMPLOYER AND THE EMPLOYEE) AND ALL HOURS WORKED IN EXCESS OF EIGHT (8) HOURS PER DAY (10 HOURS PER DAY FOR A 4 X 10 WORKWEEK) AND ON SATURDAYS AND HOLIDAYS (EXCEPT LABOR DAY) SHALL BE PAID AT ONE AND ONE-HALF TIMES THE HOURLY RATE OF WAGE. (EXCEPT FOR EMPLOYEES WHO ARE ABSENT FROM WORK WITHOUT PRIOR APROVAL ON A SCHEDULED WORKDAY DURING THE WORKWEEK SHALL BE PAID AT THE STRAIGHT-TIME RATE UNTIL THEY HAVE WORKED 8 HOURS IN A DAY (10 IN A 4 X 10 WORKWEEK) OR 40 HOURS DURING THAT WORKWEEK.) ALL HOURS WORKED MONDAY THROUGH SATURDAY OVER TWELVE (12) HOURS AND ALL HOURS WORKED ON SUNDAYS AND LABOR DAY SHALL BE PAID AT DOUBLE THE HOURLY RATE OF WAGE.

1. Z. ALL HOURS WORKED ON SATURDAYS AND SUNDAYS SHALL BE PAID AT ONE AND ONE-HALF TIMES THE HOURLY RATE OF WAGE. ALL HOURS WORKED ON HOLIDAYS SHALL BE PAID THE STRAIGHT TIME RATE OF PAY IN ADDITION TO HOLIDAY PAY.

2. ALL HOURS WORKED IN EXCESS OF EIGHT (8) HOURS PER DAY OR FORTY (40) HOURS PER WEEK SHALL BE PAID AT ONE AND ONE-HALF TIMES THE HOURLY RATE OF WAGE.

B. ALL HOURS WORKED ON HOLIDAYS SHALL BE PAID AT ONE AND ONE-HALF TIMES THE HOURLY RATE OF WAGE.

C. ALL HOURS WORKED ON SUNDAYS SHALL BE PAID AT ONE AND ONE-HALF TIMES THE HOURLY RATE OF WAGE. ALL HOURS WORKED ON HOLIDAYS SHALL BE PAID AT TWO TIMES THE HOURLY RATE OF WAGE.

F. THE FIRST EIGHT (8) HOURS WORKED ON HOLIDAYS SHALL BE PAID AT THE STRAIGHT HOURLY RATE OF WAGE IN ADDITION TO THE HOLIDAY PAY. ALL HOURS WORKED IN EXCESS OF EIGHT (8) HOURS ON HOLIDAYS SHALL BE PAID AT DOUBLE THE HOURLY RATE OF WAGE.

G. ALL HOURS WORKED ON SUNDAY SHALL BE PAID AT TWO TIMES THE HOURLY RATE OF WAGE. ALL HOURS WORKED ON PAID HOLIDAYS SHALL BE PAID AT TWO AND ONE-HALF TIMES THE HOURLY RATE OF WAGE INCLUDING HOLIDAY PAY.

H. ALL HOURS WORKED ON SUNDAY SHALL BE PAID AT TWO TIMES THE HOURLY RATE OF WAGE. ALL HOURS WORKED ON HOLIDAYS SHALL BE PAID AT ONE AND ONE-HALF TIMES THE HOURLY RATE OF WAGE.

K. ALL HOURS WORKED ON HOLIDAYS SHALL BE PAID AT TWO TIMES THE HOURLY RATE OF WAGE IN ADDITION TO THE HOLIDAY PAY.

O. ALL HOURS WORKED ON SUNDAYS AND HOLIDAYS SHALL BE PAID AT ONE AND ONE-HALF TIMES THE HOURLY RATE OF WAGE.

R. ALL HOURS WORKED ON SUNDAYS AND HOLIDAYS AND ALL HOURS WORKED OVER SIXTY (60) IN ONE WEEK SHALL BE PAID AT DOUBLE THE HOURLY RATE OF WAGE.

U. ALL HOURS WORKED ON SATURDAYS SHALL BE PAID AT ONE AND ONE-HALF TIMES THE HOURLY RATE OF WAGE. ALL HOURS WORKED OVER 12 HOURS IN A DAY, OR ON SUNDAYS AND HOLIDAYS SHALL BE PAID AT DOUBLE THE HOURLY RATE OF WAGE.

W. THE FIRST TWO (2) HOURS AFTER EIGHT (8) REGULAR HOURS MONDAY THROUGH FRIDAY AND THE FIRST EIGHT (8) HOURS ON SATURDAY SHALL BE PAID AT ONE AND ONE-HALF TIMES THE HOURLY RATE OF WAGE. ALL OTHER HOURS WORKED MONDAY THROUGH SATURDAY, AND ALL HOURS WORKED ON SUNDAYS AND HOLIDAYS SHALL BE PAID AT DOUBLE THE HOURLY RATE OF WAGE. ON A FOUR-DAY, TEN-HOUR WEEKLY SCHEDULE, EITHER MONDAY THRU THURSDAY OR TUESDAY THRU FRIDAY SCHEDULE, ALL HOURS WORKED AFTER TEN SHALL BE PAID AT DOUBLE THE HOURLY RATE OF WAGE. THE FIRST EIGHT (8) HOURS WORKED ON THE FIFTH DAY SHALL BE PAID AT ONE AND ONE-HALF TIMES THE HOURLY RATE OF WAGE. ALL OTHER HOURS WORKED ON THE FIFTH, SIXTH, AND SEVENTH DAYS AND ON HOLIDAYS SHALL BE PAID AT DOUBLE THE HOURLY RATE OF WAGE.

Y. ALL HOURS WORKED ON SATURDAYS (EXCEPT FOR MAKE-UP DAYS) SHALL BE PAID AT ONE AND ONE-HALF TIMES THE HOURLY RATE OF WAGE. ALL HOURS WORKED MONDAY THROUGH SATURDAY OVER TWELVE (12) HOURS AND ALL HOURS WORKED ON SUNDAYS AND HOLIDAYS SHALL BE PAID AT DOUBLE THE HOURLY RATE OF WAGE.

Z. ALL HOURS WORKED MONDAY THROUGH FRIDAY BETWEEN THE HOURS OF 6:00 P.M. AND 6:00 A.M. AND ALL HOURS WORKED ON SATURDAYS SHALL BE PAID AT ONE AND ONE-HALF TIMES THE HOURLY RATE OF WAGE, ***EXCEPT*** FOR COMMERCIAL, OCCUPIED BUILDINGS WHERE FLOOR COVERING WORK CANNOT BE PERFORMED IN THE REGULAR DAYTIME HOURS DUE TO OCCUPANCY. FOR SUCH OCCUPIED, COMMERCIAL BUILDINGS; THE EMPLOYEE MAY AGREE TO WORK BETWEEN THE HOURS OF 6:00 PM TO 6:00 AM MONDAY THROUGH SATURDAY MORNING AT 6:00 AM AT AN OVERTIME PAY RATE OF 10% OVER THE STRAIGHT TIME RATE. ALL HOURS WORKED ON SUNDAYS AND HOLIDAYS SHALL BE PAID AT DOUBLE THE HOURLY RATE OF WAGE.

5. L. HOLIDAYS: NEW YEAR'S DAY, MARTIN LUTHER KING JR. DAY, MEMORIAL DAY, INDEPENDENCE DAY, LABOR DAY, THANKSGIVING DAY, FRIDAY AFTER THANKSGIVING DAY, AND CHRISTMAS DAY (8)

N. HOLIDAYS: NEW YEAR'S DAY, PRESIDENTS' DAY, MEMORIAL DAY, INDEPENDENCE DAY, LABOR DAY, VETERANS' DAY, THANKSGIVING DAY, THE FRIDAY AFTER THANKSGIVING DAY, AND CHRISTMAS DAY (9).

P. HOLIDAYS: NEW YEAR'S DAY, MEMORIAL DAY, INDEPENDENCE DAY, LABOR DAY, THANKSGIVING DAY, FRIDAY AND SATURDAY AFTER THANKSGIVING DAY, THE DAY BEFORE CHRISTMAS, AND CHRISTMAS DAY (9). IF A HOLIDAY FALLS ON SUNDAY, THE FOLLOWING MONDAY SHALL BE CONSIDERED AS A HOLIDAY.

R. PAID HOLIDAYS: NEW YEAR'S DAY, MEMORIAL DAY, INDEPENDENCE DAY, LABOR DAY, THANKSGIVING DAY, DAY AFTER THANKSGIVING DAY, ONE-HALF DAY BEFORE CHRISTMAS DAY, AND CHRISTMAS DAY. (7 1/2).

S. PAID HOLIDAYS: NEW YEAR'S DAY, PRESIDENTS' DAY, MEMORIAL DAY, INDEPENDENCE DAY, LABOR DAY, THANKSGIVING DAY, AND CHRISTMAS DAY (7).

T. PAID HOLIDAYS: NEW YEAR'S DAY, WASHINGTON'S BIRTHDAY, MEMORIAL DAY, INDEPENDENCE DAY, LABOR DAY, THANKSGIVING DAY, THE FRIDAY AFTER THANKSGIVING DAY, CHRISTMAS DAY, AND THE DAY BEFORE OR AFTER CHRISTMAS (9).

Z. HOLIDAYS: NEW YEAR'S DAY, MEMORIAL DAY, INDEPENDENCE DAY, LABOR DAY, VETERANS DAY, THANKSGIVING DAY, THE FRIDAY AFTER THANKSGIVING DAY, AND CHRISTMAS DAY (8).

6. A. PAID HOLIDAYS: NEW YEAR'S DAY, PRESIDENTS' DAY, MEMORIAL DAY, INDEPENDENCE DAY, LABOR DAY, THANKSGIVING DAY, THE FRIDAY AFTER THANKSGIVING DAY, AND CHRISTMAS DAY (8).

E. PAID HOLIDAYS: NEW YEAR'S DAY, DAY BEFORE OR AFTER NEW YEAR'S DAY, PRESIDENTS DAY, MEMORIAL DAY, INDEPENDENCE DAY, LABOR DAY, THANKSGIVING DAY, DAY AFTER THANKSGIVING DAY, CHRISTMAS DAY, AND A HALF-DAY ON CHRISTMAS EVE DAY. (9 1/2).

G. PAID HOLIDAYS: NEW YEAR'S DAY, MARTIN LUTHER KING JR. DAY, PRESIDENTS' DAY, MEMORIAL DAY, INDEPENDENCE DAY, LABOR DAY, VETERANS' DAY, THANKSGIVING DAY, THE FRIDAY AFTER THANKSGIVING DAY, CHRISTMAS DAY, AND CHRISTMAS EVE DAY (11).

H. PAID HOLIDAYS: NEW YEAR'S DAY, NEW YEAR'S EVE DAY, MEMORIAL DAY, INDEPENDENCE DAY, LABOR DAY, THANKSGIVING DAY, FRIDAY AFTER THANKSGIVING DAY, CHRISTMAS DAY, THE DAY AFTER CHRISTMAS, AND A FLOATING HOLIDAY (10).

I. PAID HOLIDAYS: NEW YEAR'S DAY, MEMORIAL DAY, INDEPENDENCE DAY, LABOR DAY, THANKSGIVING DAY, FRIDAY AFTER THANKSGIVING DAY, AND CHRISTMAS DAY (7).

Q. PAID HOLIDAYS: NEW YEAR'S DAY, MEMORIAL DAY, INDEPENDENCE DAY, LABOR DAY, VETERANS DAY, THANKSGIVING DAY, THE DAY AFTER THANKSGIVING DAY AND CHRISTMAS DAY (8). UNPAID HOLIDAY: PRESIDENTS' DAY.

T. PAID HOLIDAYS: NEW YEAR'S DAY, PRESIDENTS' DAY, MEMORIAL DAY, INDEPENDENCE DAY, LABOR DAY, THANKSGIVING DAY, THE FRIDAY AFTER THANKSGIVING DAY, THE LAST WORKING DAY BEFORE CHRISTMAS DAY, AND CHRISTMAS DAY (9).

Z. HOLIDAYS: NEW YEAR'S DAY, MEMORIAL DAY, INDEPENDENCE DAY, LABOR DAY, THANKSGIVING DAY, FRIDAY AFTER THANKSGIVING DAY, AND CHRISTMAS DAY (7). IF A HOLIDAY FALLS ON SATURDAY, THE PRECEDING FRIDAY SHALL BE CONSIDERED AS THE HOLIDAY. IF A HOLIDAY FALLS ON SUNDAY, THE FOLLOWING MONDAY SHALL BE CONSIDERED AS THE HOLIDAY.

7. A. HOLIDAYS: NEW YEAR'S DAY, MEMORIAL DAY, INDEPENDENCE DAY, LABOR DAY, THANKSGIVING DAY, THE FRIDAY AND SATURDAY AFTER THANKSGIVING DAY, AND CHRISTMAS DAY (8). ANY HOLIDAY WHICH FALLS ON A SUNDAY SHALL BE OBSERVED AS A HOLIDAY ON THE FOLLOWING MONDAY. IF ANY OF THE LISTED HOLIDAYS FALLS ON A SATURDAY, THE PRECEDING FRIDAY SHALL BE A REGULAR WORK DAY.

B. HOLIDAYS: NEW YEAR'S DAY, MEMORIAL DAY, INDEPENDENCE DAY, LABOR DAY, THANKSGIVING DAY, THE FRIDAY AND SATURDAY AFTER THANKSGIVING DAY, AND CHRISTMAS DAY (8). ANY HOLIDAY WHICH FALLS ON A SUNDAY SHALL BE OBSERVED AS A HOLIDAY ON THE FOLLOWING MONDAY. ANY HOLIDAY WHICH FALLS ON A SATURDAY SHALL BE OBSERVED AS A HOLIDAY ON THE PRECEDING FRIDAY.

7. C. HOLIDAYS: NEW YEAR'S DAY, MARTIN LUTHER KING JR. DAY, MEMORIAL DAY, INDEPENDENCE DAY, LABOR DAY, THANKSGIVING DAY, THE FRIDAY AFTER THANKSGIVING DAY, AND CHRISTMAS DAY (8). ANY HOLIDAY WHICH FALLS ON A SUNDAY SHALL BE OBSERVED AS A HOLIDAY ON THE FOLLOWING MONDAY. ANY HOLIDAY WHICH FALLS ON A SATURDAY SHALL BE OBSERVED AS A HOLIDAY ON THE PRECEDING FRIDAY.

D. PAID HOLIDAYS: NEW YEAR'S DAY, MEMORIAL DAY, INDEPENDENCE DAY, LABOR DAY, VETERAN'S DAY, THANKSGIVING DAY, THE FRIDAY AFTER THANKSGIVING DAY, AND CHRISTMAS DAY (8). UNPAID HOLIDAYS: PRESIDENT'S DAY. ANY PAID HOLIDAY WHICH FALLS ON A SUNDAY SHALL BE OBSERVED AS A HOLIDAY ON THE FOLLOWING MONDAY. ANY PAID HOLIDAY WHICH FALLS ON A SATURDAY SHALL BE OBSERVED AS A HOLIDAY ON THE PRECEDING FRIDAY.

E. HOLIDAYS: NEW YEAR'S DAY, MEMORIAL DAY, INDEPENDENCE DAY, LABOR DAY, THANKSGIVING DAY, THE FRIDAY AFTER THANKSGIVING DAY, AND CHRISTMAS DAY (7). ANY HOLIDAY WHICH FALLS ON A SUNDAY SHALL BE OBSERVED AS A HOLIDAY ON THE FOLLOWING MONDAY. ANY HOLIDAY WHICH FALLS ON A SATURDAY SHALL BE OBSERVED AS A HOLIDAY ON THE PRECEDING FRIDAY.

F. HOLIDAYS: NEW YEAR'S DAY, MEMORIAL DAY, INDEPENDENCE DAY, LABOR DAY, THANKSGIVING DAY, THE FRIDAY AFTER THANKSGIVING DAY, THE LAST WORKING DAY BEFORE CHRISTMAS DAY AND CHRISTMAS DAY (8). ANY HOLIDAY WHICH FALLS ON A SUNDAY SHALL BE OBSERVED AS A HOLIDAY ON THE FOLLOWING MONDAY. ANY HOLIDAY WHICH FALLS ON A SATURDAY SHALL BE OBSERVED AS A HOLIDAY ON THE PRECEDING FRIDAY.

G. HOLIDAYS: NEW YEAR'S DAY, MEMORIAL DAY, INDEPENDENCE DAY, LABOR DAY, THANKSGIVING DAY, AND CHRISTMAS DAY (6). ANY HOLIDAY WHICH FALLS ON A SUNDAY SHALL BE OBSERVED AS A HOLIDAY ON THE FOLLOWING MONDAY.

H. HOLIDAYS: NEW YEAR'S DAY, MARTIN LUTHER KING JR. DAY, INDEPENDENCE DAY, MEMORIAL DAY, LABOR DAY, THANKSGIVING DAY, THE FRIDAY AFTER THANKSGIVING DAY, THE LAST WORKING DAY BEFORE CHRISTMAS DAY AND CHRISTMAS DAY (9). ANY HOLIDAY WHICH FALLS ON A SUNDAY SHALL BE OBSERVED AS A HOLIDAY ON THE FOLLOWING MONDAY. ANY HOLIDAY WHICH FALLS ON A SATURDAY SHALL BE OBSERVED AS A HOLIDAY ON THE PRECEDING FRIDAY.

I. HOLIDAYS: NEW YEAR'S DAY, PRESIDENT'S DAY, INDEPENDENCE DAY, MEMORIAL DAY, LABOR DAY, THANKSGIVING DAY, THE FRIDAY AFTER THANKSGIVING DAY, THE DAY BEFORE CHRISTMAS DAY AND CHRISTMAS DAY (9). ANY HOLIDAY WHICH FALLS ON A SUNDAY SHALL BE OBSERVED AS A HOLIDAY ON THE FOLLOWING MONDAY. ANY HOLIDAY WHICH FALLS ON A SATURDAY SHALL BE OBSERVED AS A HOLIDAY ON THE PRECEDING FRIDAY.

J. HOLIDAYS: NEW YEAR'S DAY, INDEPENDENCE DAY, MEMORIAL DAY, LABOR DAY, THANKSGIVING DAY AND CHRISTMAS DAY (6). ANY HOLIDAY WHICH FALLS ON A SUNDAY SHALL BE OBSERVED AS A HOLIDAY ON THE FOLLOWING MONDAY. ANY HOLIDAY WHICH FALLS ON A SATURDAY SHALL BE OBSERVED AS A HOLIDAY ON THE PRECEDING FRIDAY.

K. HOLIDAYS: NEW YEAR'S DAY, MEMORIAL DAY, INDEPENDENCE DAY, THANKSGIVING DAY, THE FRIDAY AND SATURDAY AFTER THANKSGIVING DAY, AND CHRISTMAS DAY (8). ANY HOLIDAY WHICH FALLS ON A SUNDAY SHALL BE OBSERVED AS A HOLIDAY ON THE FOLLOWING MONDAY. ANY HOLIDAY WHICH FALLS ON A SATURDAY SHALL BE OBSERVED AS A HOLIDAY ON THE PRECEDING FRIDAY.

L. HOLIDAYS: NEW YEAR'S DAY, MEMORIAL DAY, LABOR DAY, INDEPENDENCE DAY, THANKSGIVING DAY, THE LAST WORK DAY BEFORE CHRISTMAS DAY, AND CHRISTMAS DAY (7). ANY HOLIDAY WHICH FALLS ON A SUNDAY SHALL BE OBSERVED AS A HOLIDAY ON THE FOLLOWING MONDAY. ANY HOLIDAY WHICH FALLS ON A SATURDAY SHALL BE OBSERVED AS A HOLIDAY ON THE PRECEDING FRIDAY.

M. PAID HOLIDAYS: NEW YEAR'S DAY, THE DAY AFTER OR BEFORE NEW YEAR'S DAY, PRESIDENT'S DAY, MEMORIAL DAY, INDEPENDENCE DAY, LABOR DAY, THANKSGIVING DAY, THE FRIDAY AFTER THANKSGIVING DAY, CHRISTMAS DAY, AND THE DAY AFTER OR BEFORE CHRISTMAS DAY. 10). ANY HOLIDAY WHICH FALLS ON A SUNDAY SHALL BE OBSERVED AS A HOLIDAY ON THE FOLLOWING MONDAY. ANY HOLIDAY WHICH FALLS ON A SATURDAY SHALL BE OBSERVED AS A HOLIDAY ON THE PRECEDING FRIDAY.

N. HOLIDAYS: NEW YEAR'S DAY, MEMORIAL DAY, INDEPENDENCE DAY, LABOR DAY, THANKSGIVING DAY, THE FRIDAY AFTER THANKSGIVING DAY, AND CHRISTMAS DAY (7). ANY HOLIDAY WHICH FALLS ON A SUNDAY SHALL BE OBSERVED AS A HOLIDAY ON THE FOLLOWING MONDAY. WHEN CHRISTMAS FALLS ON A SATURDAY, THE PRECEDING FRIDAY SHALL BE OBSERVED AS A HOLIDAY.

7. O. PAID HOLIDAYS: NEW YEAR'S DAY, THE DAY AFTER OR BEFORE NEW YEAR'S DAY, PRESIDENT'S DAY, MEMORIAL DAY, INDEPENDENCE DAY, LABOR DAY, THANKSGIVING DAY, THE FRIDAY AFTER THANKSGIVING DAY, CHRISTMAS DAY, THE DAY AFTER OR BEFORE CHRISTMAS DAY, AND THE EMPLOYEES BIRTHDAY. 11). ANY HOLIDAY WHICH FALLS ON A SUNDAY SHALL BE OBSERVED AS A HOLIDAY ON THE FOLLOWING MONDAY. ANY HOLIDAY WHICH FALLS ON A SATURDAY SHALL BE OBSERVED AS A HOLIDAY ON THE PRECEDING FRIDAY.

P. HOLIDAYS: NEW YEAR'S DAY, MEMORIAL DAY, INDEPENDENCE DAY, LABOR DAY, THANKSGIVING DAY, FRIDAY AFTER THANKSGIVING DAY, AND CHRISTMAS DAY (7). ANY HOLIDAY WHICH FALLS ON A SUNDAY SHALL BE OBSERVED AS A HOLIDAY ON THE FOLLOWING MONDAY.

Q. HOLIDAYS: NEW YEAR'S DAY, MEMORIAL DAY, INDEPENDENCE DAY, LABOR DAY, THANKSGIVING DAY, THE FRIDAY AFTER THANKSGIVING DAY, THE LAST WORKING DAY BEFORE CHRISTMAS DAY AND CHRISTMAS DAY (8). ANY HOLIDAY WHICH FALLS ON A SUNDAY SHALL BE OBSERVED AS A HOLIDAY ON THE FOLLOWING MONDAY. IF ANY OF THE LISTED HOLIDAYS FALLS ON A SATURDAY, THE PRECEDING FRIDAY SHALL BE A REGULAR WORK DAY.

NOTE CODES

8. A. IN ADDITION TO THE HOURLY WAGE AND FRINGE BENEFITS, THE FOLLOWING DEPTH PREMIUMS APPLY TO DEPTHS OF FIFTY FEET OR MORE:

OVER 50' TO 100' - $2.00 PER FOOT FOR EACH FOOT OVER 50 FEET
OVER 100' TO 150' - $3.00 PER FOOT FOR EACH FOOT OVER 100 FEET
OVER 150' TO 220' - $4.00 PER FOOT FOR EACH FOOT OVER 150 FEET
OVER 220' - $5.00 PER FOOT FOR EACH FOOT OVER 220 FEET

C. IN ADDITION TO THE HOURLY WAGE AND FRINGE BENEFITS, THE FOLLOWING DEPTH PREMIUMS APPLY TO DEPTHS OF FIFTY FEET OR MORE:

OVER 50' TO 100' - $1.00 PER FOOT FOR EACH FOOT OVER 50 FEET
OVER 100' TO 150' - $1.50 PER FOOT FOR EACH FOOT OVER 100 FEET
OVER 150' TO 200' - $2.00 PER FOOT FOR EACH FOOT OVER 150 FEET
OVER 200' - DIVERS MAY NAME THEIR OWN PRICE

D. WORKERS WORKING WITH SUPPLIED AIR ON HAZMAT PROJECTS RECEIVE AN ADDITIONAL $1.00 PER HOUR.

L. WORKERS ON HAZMAT PROJECTS RECEIVE ADDITIONAL HOURLY PREMIUMS AS FOLLOWS - LEVEL A: $0.75, LEVEL B: $0.50, AND LEVEL C: $0.25.

M. WORKERS ON HAZMAT PROJECTS RECEIVE ADDITIONAL HOURLY PREMIUMS AS FOLLOWS: LEVELS A & B: $1.00, LEVELS C & D: $0.50.

N. WORKERS ON HAZMAT PROJECTS RECEIVE ADDITIONAL HOURLY PREMIUMS AS FOLLOWS - LEVEL A: $1.00, LEVEL B: $0.75, LEVEL C: $0.50, AND LEVEL D: $0.25

P. WORKERS ON HAZMAT PROJECTS RECEIVE ADDITIONAL HOURLY PREMIUMS AS FOLLOWS - CLASS A SUIT: $2.00, CLASS B SUIT: $1.50, CLASS C SUIT: $1.00, AND CLASS D SUIT $0.50.

Q. THE HIGHEST PRESSURE REGISTERED ON THE GAUGE FOR AN ACCUMULATED TIME OF MORE THAN FIFTEEN (15) MINUTES DURING THE SHIFT SHALL BE USED IN DETERMINING THE SCALE PAID.

APPENDIX B
GEOTECHNICAL DATA REPORT
(This Page Intentionally Left Blank)

GEOTEST

741 Marine Drive
Bellingham, WA 98225

20611-67th Avenue NE
Arlington, WA 98223

PHONE
360 733_7318

TOLL FREE
888 251_5276

FAX
360 733_7418

March 28, 2012
Job No. 11-0613

Reichhardt and Ebe Engineering
PO Box 978
Lynden, WA 98264

Attn: Mike Kooy, P.E.

Re: Review of Culvert and Wall Details
Main Street Improvements, Phase 2b
Douglas to Church Road
Ferndale, Washington

Dear Mr. Kooy:

This letter presents the review of your culvert and wall details for the proposed Main Street Improvement Project, Phase 2b in Ferndale, Washington. It is our understanding that the concrete box culvert will be located under Main Street between approximately Sta. 23+50 and 24+00. An Ultra Block MSE retaining wall is planned to be constructed at both north and south ends of the box culvert to the road embankment fill. The project plans and wall details were provided by Reichhardt and Ebe. For our modeling, we utilized the same soil parameters provided within our previously submitted field investigation report.

We have reviewed an ULTRABLOCK® MSE wall for wall heights in 2.5 foot increments ranging from 5 feet to 12.5 feet at a 1.5 degree batter orientation. MSE walls in excess of 12.5 ft may not be stable based on the current design. The MSE wall was designed assuming relatively flat backslope and surcharge loads of 350 psf to model the heavy traffic loads placed approximately 7.5 feet behind the face of the retaining wall, respectively. A concrete sidewalk will cover the top of retaining wall and minimum 2 feet of structural fill will be used under the sidewalk and/or pavement. If a higher surcharge load is anticipated, the design may need to be modified accordingly.

Wall design elements within the supplied construction drawings were confirmed as follows:

- The minimum 36 inch imported structural fill base will be suitable for support of the wall with an adequate allowable bearing capacity.
- A minimum of 24 inches of wall embedment located in front of the wall will be adequate to provide the necessary passive soil resistance at the base of the wall.
- We recommend that the base of the wall blocks be level with the base of the box culvert immediately adjacent to the culvert.
- Walls greater than one block high should be mechanically stabilized with geogrid consisting of Miragrid 5XT or approved performance equivalent that is placed between each row of blocks for a positive mechanical connection.
- The specified structural fill should extended back to the full length of the grid.

- The gravel drainage layer located immediately behind the wall does not need to extend any further down then the base of the drain pipe location. We recommend that the drain pipe be located at the base of the wall where the wall is located outside of the immediate creek channel or a minimum of 12 inches below the elevation of the ground surface located within the creek channel.
- The pipe should consist of 4" perforated PVC, holes oriented down.
- Non-woven geotextile separation fabric is recommended to consist of Mirafi 140N or performance equivalent.
- Specific orientation of drainage system will need to be field fit based on the conditions encountered during construction.
- The use of geogrid beneath the base of the block is not necessary when located above the box culvert.

Based on our Ultra Block MSE wall analysis, the various wall heights between 5 to 12.5 feet are all stable in accordance with the applicable grid lengths within the following table.

Geogrid Table		
Total Wall Height (feet)	Total Geogrid Length (feet)	Geogrid Type
5	6	Miragrid 5XT
7.5	7.5	Miragrid 5XT
10	10	Miragrid 5XT
12.5	12.5	Miragrid 5XT

All other ULTRABLOCK® MSE wall construction and installation specifications, not specifically stated above, should be applied during construction.

LIMITATIONS

Our review comments and recommendations provided in this letter are based on the supplied drawings and details, conditions encountered at the time of our previous subsurface exploration, information from previous studies and/or projects and our experience and judgment. Our work has been performed in a manner consistent with that level of care and skill ordinarily exercised by members of the profession currently practicing under similar conditions in this area for the exclusive use of Reichhardt and Ebe Engineering Inc. and their representatives. No warranty, expressed or implied, is made.

We presume the subsurface conditions encountered are representative of the subject site for the purposes of formulating our recommendations. However, you should be aware that subsurface conditions may vary with time and between exploratory locations, and unanticipated conditions may be encountered. If construction reveals differing conditions or the design is modified, we should be retained to reevaluate our recommendations and provide written confirmation or modification, as needed.

We appreciate the opportunity to be of service to you on this project. If any questions should arise regarding this report, please contact the undersigned.

Respectfully Submitted,
GeoTest Services, Inc.

Dan Sorenson, L.E.G.
Engineering Geologist

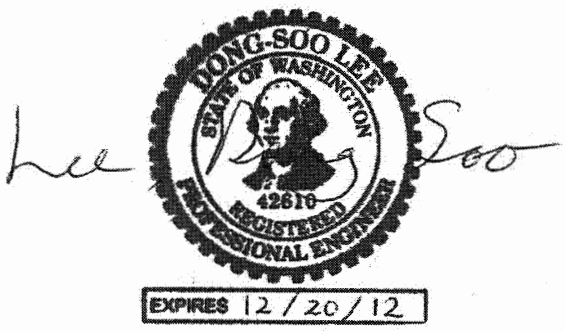

Dong-Soo Lee, P.E.
Sr. Geotechnical Engineer

Attachments: R&E Plan Sheets 29, 30, 31.1 and 31.2, dated 3-20-12

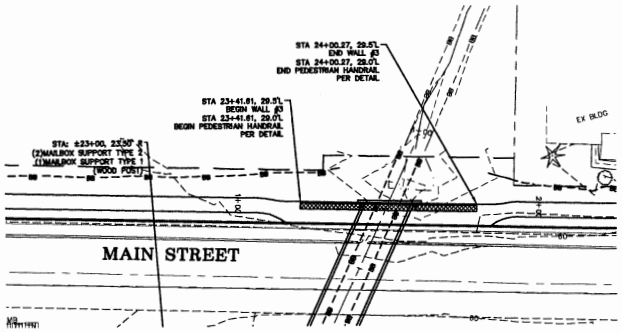

NORTH WALL PLAN

GRAPHIC SCALE

20 0 10 20

(IN FEET)
1 inch = 20 ft.

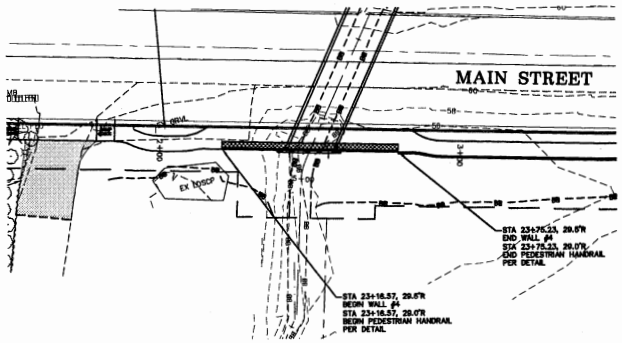

SOUTH WALL PLAN

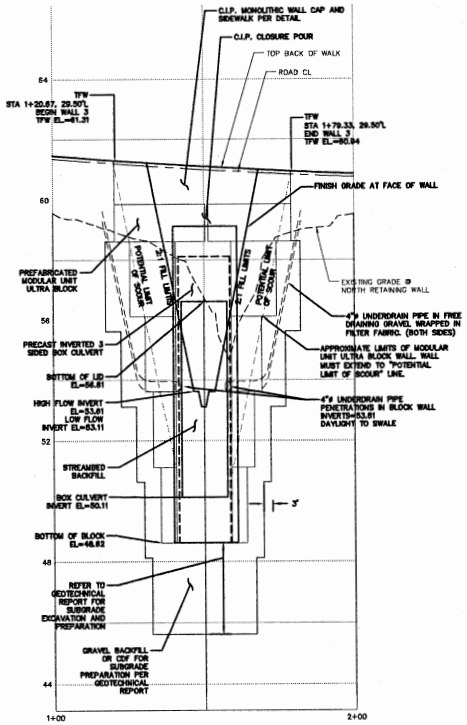

NORTH WALL PROFILE

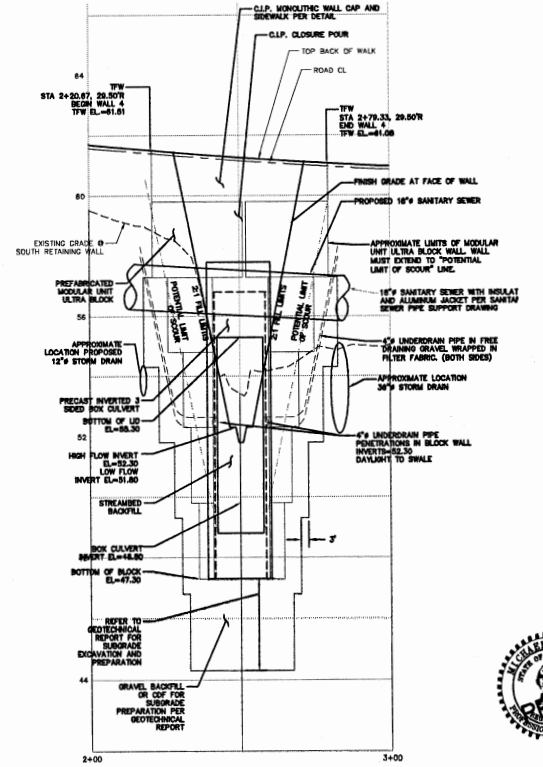

SOUTH WALL PROFILE

DESIGNED BY MLK/LP DRAWN BY CHECKED BY LP	R&E REICHHARDT & EBE ENGINEERING, INC. CONSULTING ENGINEERS PO Box 978 423 Front St., Ste 201 Lynden, Washington 98264 Ph (360) 354-3557 Fax (360) 354-0407	NO.	DATE	REVISION	BY	CITY OF FERNDALE PO BOX 936 FERNDALE, WA 98248	MAIN STREET IMPROVEMENTS (DOUGLAS TO CHURCH) NORTH AND SOUTH WALLS PLANS AND PROFILES

JOB# / DWG 08018.P2b 08018_SP1 | DATE 3-20-12 | SCALE H:1"=20' V:1"=2' | SHEET 29

P:\Projects\08018\dwg\Phase 2B\08018_SP1.dwg, CULVERT, 3/20/2012 11:43:06 AM

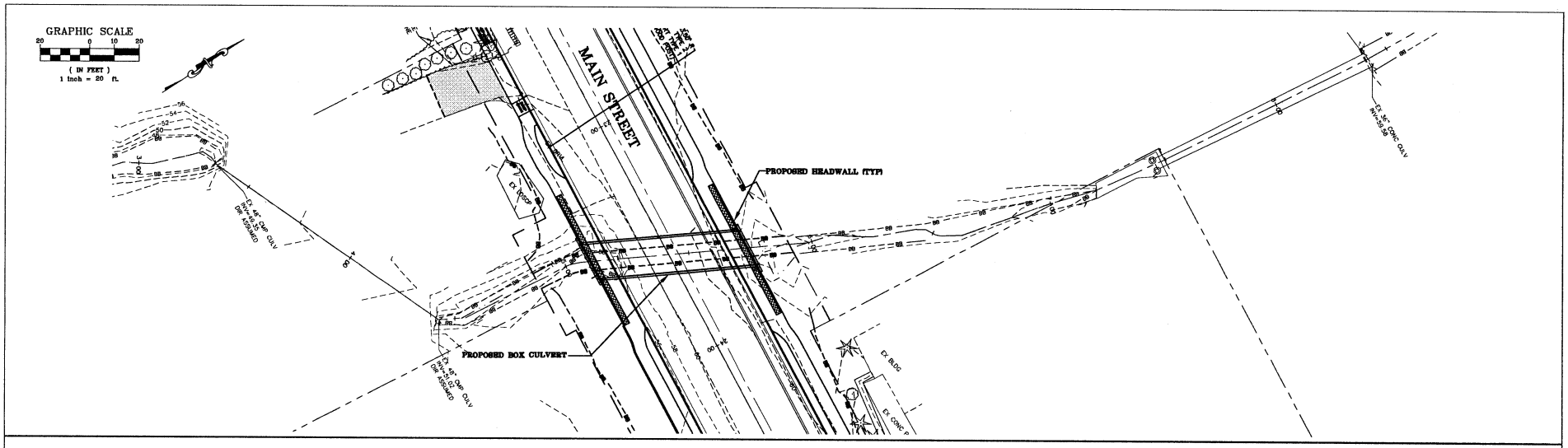

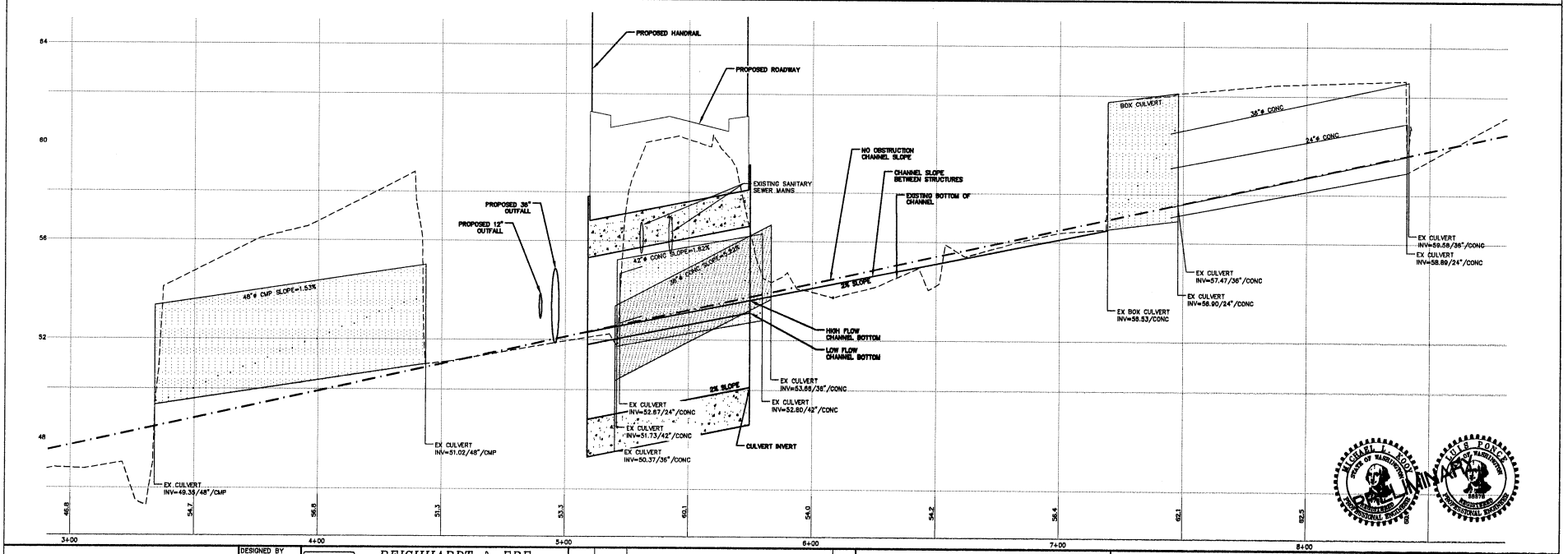

DESIGNED BY MLK/LP DRAWN BY CHECKED BY LP	R&E REICHHARDT & EBE ENGINEERING, INC. CONSULTING ENGINEERS PO Box 978 423 Front St., Ste 201 Lynden, Washington 98264 Ph (360) 354-3687 Fax (360) 354-0407	NO. / DATE / REVISION / BY	CITY OF FERNDALE PO BOX 936 FERNDALE, WA 98248	MAIN STREET IMPROVEMENTS (DOUGLAS TO CHURCH) PROPOSED CULVERT PLAN AND PROFILE	JOB# / DWG 08018.P2b 08018_SP1 SCALE H:1"=20' V:1"=2'	DATE 3-20-12 SHEET 30

P:\Projects\08018\dwg\Phase 2B\08018_SP1.dwg, CULVERT, 3/20/2012 11:44:50 AM

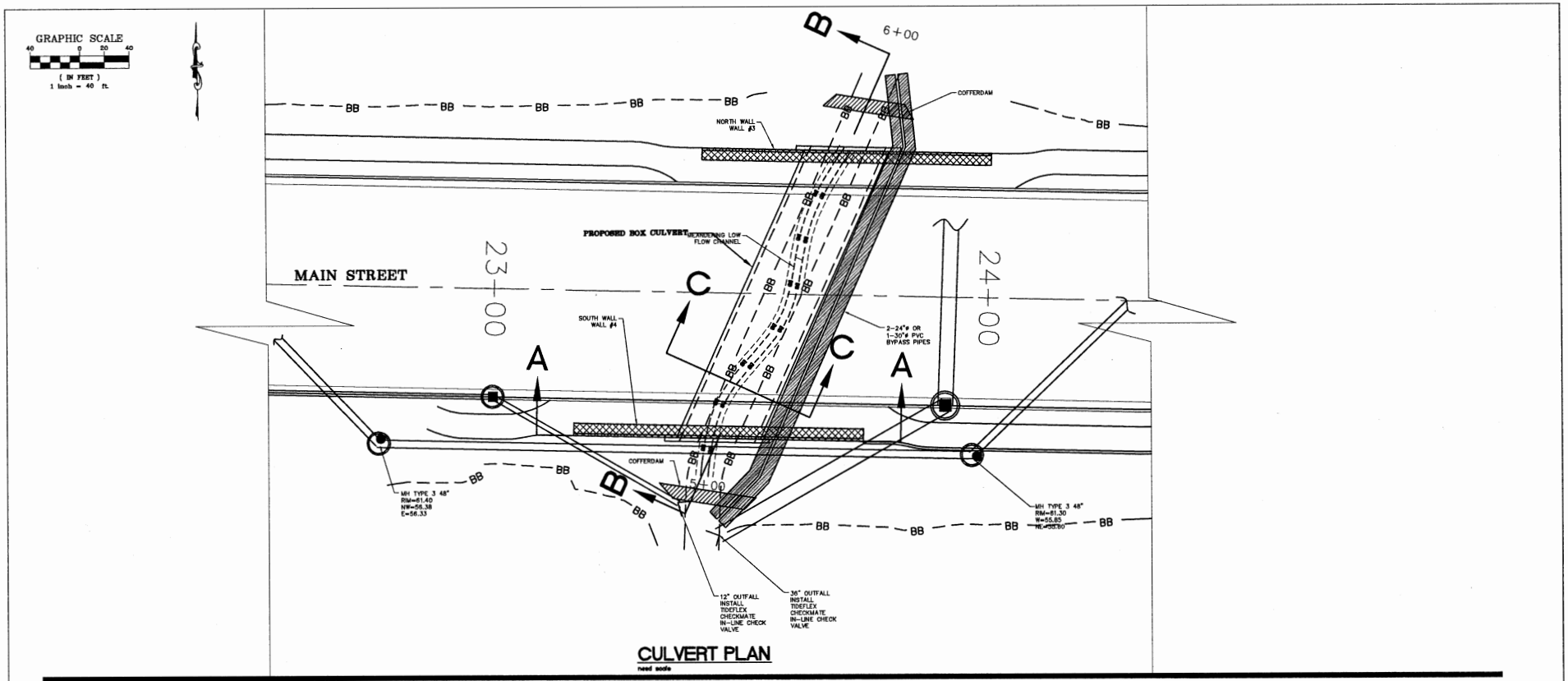

CULVERT PLAN

need scale

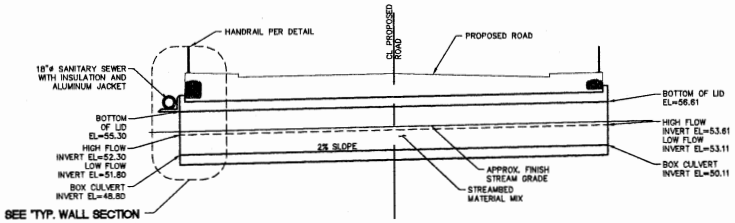

SECTION B-B

NTS

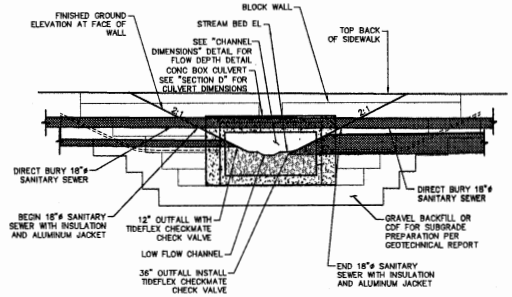

SECTION A-A

(DETAIL DEPICTS WALL #4, SOUTH WALL)

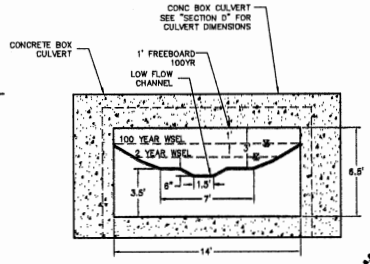

SECTION C-C

need scale

PRELIMINARY

DESIGNED BY MLK/LP DRAWN BY CHECKED BY LP	R&E	REICHHARDT & EBE ENGINEERING, INC. CONSULTING ENGINEERS PO Box 978 423 Front St., Ste 201 Lynden, Washington 98264 Ph (360) 354-3687 Fax (360) 354-0407	NO.	DATE	REVISION	BY	CITY OF FERNDALE PO BOX 936 FERNDALE, WA 98248

MAIN STREET IMPROVEMENTS
(DOUGLAS TO CHURCH)
CULVERT AND WALL DETAILS

JOB# / DWG: 08018.P2b 08018_SP1
DATE: 3-20-12
SCALE: H:1"=40' V:n/a
SHEET: 31.1

P:\Projects\08018\dwg\Phase 2B\08018_SP1.dwg, CULVERT, 3/20/2012 11:45:22 AM

GEOGRID REINFORCEMENT (L) VS WALL HEIGHT (H)			
TOTAL WALL HEIGHT (FEET) H	GEOGRID LOCATION	GEOGRID TYPE	GEOGRID LENGTH (FEET) L
5	ALL LAYERS	MIRAGRID 5XT	7.0
7	ALL LAYERS	MIRAGRID 5XT	9.0
11.5	ALL LAYERS	MIRAGRID 5XT	10

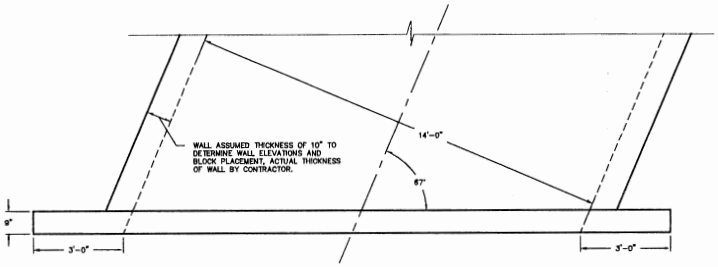

SECTION E-E

scale

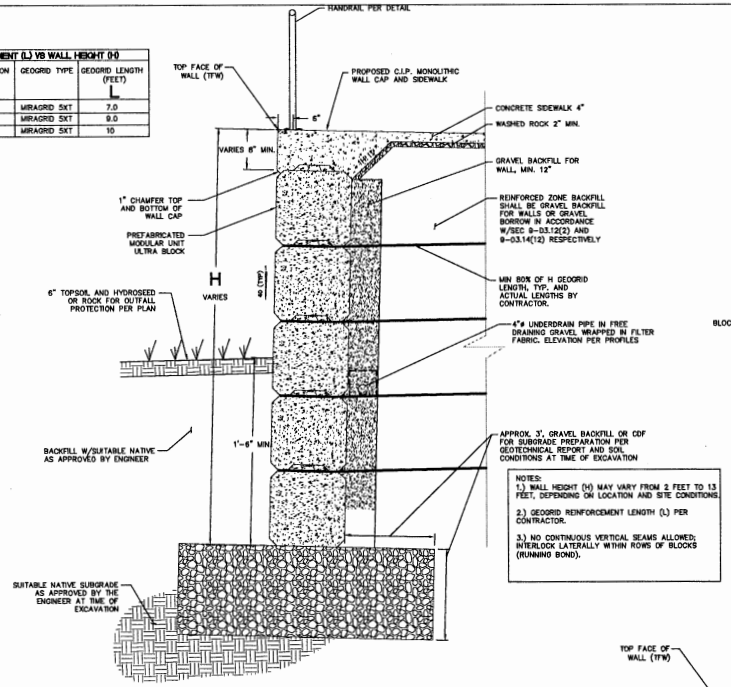

NOTES:
1.) WALL HEIGHT (H) MAY VARY FROM 2 FEET TO 13 FEET, DEPENDING ON LOCATION AND SITE CONDITIONS.

2.) GEOGRID REINFORCEMENT LENGTH (L) PER CONTRACTOR.

3.) NO CONTINUOUS VERTICAL SEAMS ALLOWED; INTERLOCK LATERALLY WITHIN ROWS OF BLOCKS (RUNNING BOND).

TYP. WALL SECTION

NTS (DETAIL DEPICTS WALL #4, SOUTH WALL)

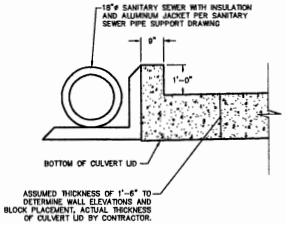

HANGER DETAIL

NTS

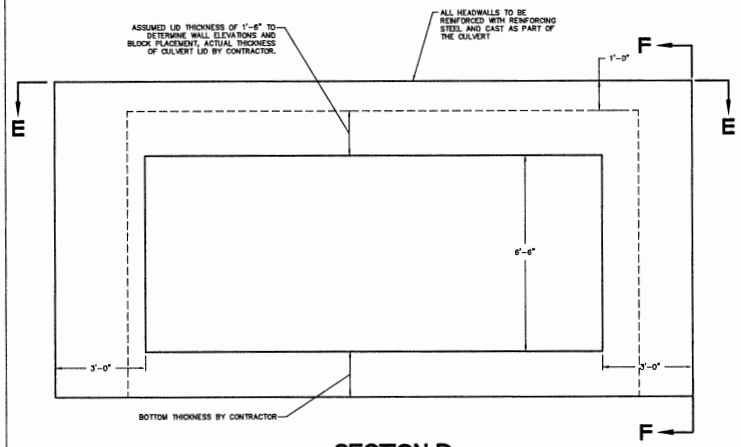

SECTION D

scale

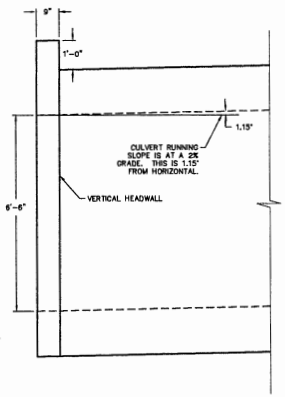

SECTION F-F

scale

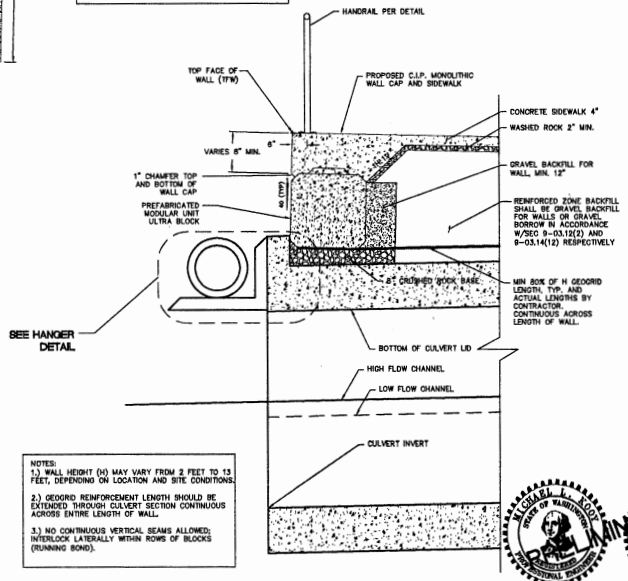

NOTES:
1.) WALL HEIGHT (H) MAY VARY FROM 2 FEET TO 13 FEET, DEPENDING ON LOCATION AND SITE CONDITIONS.

2.) GEOGRID REINFORCEMENT LENGTH SHOULD BE EXTENDED THROUGH CULVERT SECTION CONTINUOUS ACROSS ENTIRE LENGTH OF WALL.

3.) NO CONTINUOUS VERTICAL SEAMS ALLOWED; INTERLOCK LATERALLY WITHIN ROWS OF BLOCKS (RUNNING BOND).

TYP. WALL SECTION AT CULVERT

NTS (DETAIL DEPICTS WALL #4, SOUTH WALL)

DESIGNED BY MLK/LP	R&E	REICHHARDT & EBE ENGINEERING, INC. CONSULTING ENGINEERS PO Box 978 423 Front St., Ste 201 Lynden, Washington 98264 Ph (360) 354-3687 Fax (360) 354-0407	NO.	DATE	REVISION	BY	CITY OF FERNDALE PO BOX 936 FERNDALE, WA 98248
DRAWN BY							MAIN STREET IMPROVEMENTS (DOUGLAS TO CHURCH) CULVERT AND WALL DETAILS
CHECKED BY LP							

JOB# / DWG	DATE
08018.P2b 08018_SP1	3-20-12
SCALE H:n/a V:n/a	SHEET 31.2

P:\Projects\08018\dwg\Phase 2B\08018_SP1.dwg, CULVERT, 3/20/2012 11:45:43 AM

GEOTEST

741 Marine Drive
Bellingham, WA 98226

20611-67th Avenue NE
Arlington, WA 98223

PHONE
360 733_7318

TOLL FREE
888 251_5276

FAX
360 733_7418

February 7, 2012
Job No. 11-0613

Reichhardt & Ebe Engineering
PO Box 978
Lynden, Washington 98264

Attn.: Mike Kooy

Re: Limited Geotechnical Engineering Evaluation
Proposed Box Culvert and Retaining Walls
Main Street Improvements, Phase 2b
Church Road to Douglas Street
Ferndale, Washington

Dear Mr. Kooy,

As requested, GeoTest Services, Inc. is pleased to submit this report summarizing the results of our limited geotechnical engineering evaluation for the referenced project. Specifically, our scope of services included the following tasks:

- Exploration of soil and groundwater conditions underlying the proposed box culvert and retaining wall by using hand auger and dynamic cone penetrometer (DCP) equipment to evaluate subsurface conditions.

- Laboratory testing on representative samples in order to classify and evaluate the engineering characteristics of the soils encountered.

- Provide this written report containing a description of subsurface soil and groundwater conditions, test pit logs, and geotechnical recommendations pertaining to bearing capacity and lateral pressures for retaining wall and box culvert construction.

PROJECT DESCRIPTION

We understand that improvements will include installation of a new box culvert located in a streambed below Main Street at Station 23+50 and a proposed retaining wall to the south of Main Street from approximate Station 4+50 to Station 6+50. It is our understanding that the box culvert will likely be either a three-sided or four sided box culvert constructed from concrete. It is our also understanding that the design of the edge of road right-of-way retaining walls are yet to be determined; however, they will likely be either modular block or cast-in-place concrete retaining wall styles. Both areas of exploration are referenced on the Site and Exploration Plan, Figure 1.

SITE CONDITIONS

This section discusses the general surface and subsurface conditions observed at the project site at the time of our field investigation. Interpretations of the site conditions are

based on the results of our review of available information, site reconnaissance, subsurface explorations, and laboratory testing.

Surface Conditions

The site of the proposed new box culvert is currently within a stream bed that was steadily flowing at the time of our investigation. The proposed new box culvert will replace several corrugated pipe culverts that are currently being used. The exploration areas adjacent to the stream location were heavily vegetated with blackberry bushes. The site of the proposed retaining wall was along an existing ditch at the south side of Main Street. The subject ditch alignment sloped gently down towards the east. Minimal vegetation was present within this area. Surface water was not observed at the proposed wall location at the time of our field investigation.

Subsurface Exploration

Subsurface conditions within the areas of interest were explored by performing 4 hand augers test pits (HA-1 through HA-4) and 4 dynamic cone penetrometer (DCP) explorations (DCP-1 through DCP-4) on January 12th, 2012. Hand auger explorations are used to directly sample the underlying soil utilizing the hollow auger sampler. Dynamic cone penetrometer analysis consists of driving an approximately 1 inch diameter steel rod into the ground utilizing a 35 pound drop hammer. By measuring the number of blows it takes to drive the rod every four inches (10 cm), the general density of granular soils and the stiffness of cohesive soils can be determined. The number of blows for each increment can be correlated to standard N values obtained from a drill rig.

GeoTest Services, Inc. performed the subsurface explorations in close vicinity to the locations provided on the Core/Auger Location Exhibit provided by Reichhardt and Ebe Engineering. Two hand auger and DCP explorations were advanced within the general vicinity of east of the proposed box culvert and retaining wall locations. DCP explorations were driven to approximately 8 to 16.5 feet BGS while hand auger test pits were explored to approximately 4 to 5.5 feet BGS. Logs of each hand auger test pit and DCP exploration are attached to this report. The approximate locations of the hand auger test pit and DCP test are shown on the Site and Exploration Plan, Figure 1.

Subsurface Conditions

Near surface soils encountered near the proposed box culvert (HA-1 and HA-2) consisted of approximately 2 feet of very soft, brown, wet, organic, sandy clay (Topsoil). Underlying the topsoil we encountered very soft, blue-gray, wet, fine, very sandy clay to the full depths explored. According to the DCP logs, the underlying soils were very soft to soft down to approximately 8 feet BGS. Below approximately 8 feet BGS the clay became medium stiff to stiff to the full depths explored of approximately 15 to 16 feet BGS.

Near surface soils encountered near the proposed retaining wall (HA-3 and HA-4) consisted of approximately 1.5 to 2 feet of very soft, brown, very organic, sandy clay (Topsoil) overlying soft to medium stiff, mottled-tan, moist to wet, sandy clay. At approximately 4 feet below the ground surface we encountered very stiff/medium dense, brown-gray, moist, sandy clay/clayey sand to the full depths explored. According to the

DCP logs, the underlying soil increased in consistency with depth becoming dense/hard at approximately 5 to 8 feet below the ground surface.

Groundwater

At the time of our subsurface investigation in January 2012, perched groundwater seepage was only encountered with HA-3 at 1.5 feet BGS. Saturated soils were encountered to the full depths explored within HA-1 and HA-2, which were located adjacent to the creek near Station 23+50. Visible groundwater seepage was not encountered within HA-1 and HA-2 during our exploration due the low permeability of the clayey soil within this area. The groundwater expected to be encountered within the project area will be perched seepage within the near surface soil above the underlying clay deposits. A regional groundwater table that supports a fluctuating groundwater elevation is not anticipated to be encountered within the project.

The groundwater conditions reported on the hand auger test pit logs are for the specific locations and dates indicated, and therefore may not necessarily be indicative of other locations and/or times. Groundwater levels are not static and it is anticipated that groundwater conditions will vary depending on local subsurface conditions, season, precipitation and changes in site use, both on and off site.

CONCLUSIONS AND RECOMMENDATIONS

Based upon evaluation of the data collected during this investigation, it is our opinion that subsurface conditions at the site are suitable for the proposed retaining wall(s) provided the recommendations contained herein are incorporated into the project design. Based on the soft clayey soils encountered below the proposed box culvert, a conventional spread footing foundation at the base of the sidewalls is recommended to be supported by additional ground improvement in order to limit the potential for excessive settlement. We understand that the initial box culvert design may be three sided and that the overlying traffic load rating will be based on a T2 truck route.

Due to the presence of relatively soft clay beneath the proposed culvert location, it is our opinion that a three sided culvert design will need a poured footing to provided additional foundation support. The soil beneath the footing will also likely need to be overexcavated down to the medium stiff clay at an elevation of approximately 8 feet beneath existing grades to provide adequate support. Overexcavation backfill can either consist of compacted import gravel or CDF (lean concrete). Gravel overexcavation should consist of a width on each side of the footing equal to the depth of gravel placed beneath the footing. The excavation should be backfilled with suitable import sand and gravel and compacted in 12 inch lifts to a minimum of 95 percent of the maximum dry density based on the laboratory proctor method ASTM D1557. We also recommend that a woven geotextile fabric such as Mirafi 500X, or performance equivalent, be placed at the base and sidewalls of the excavation between the native clayey soil and the imported granular fill.

If lean concrete is used, the overexcavation need only be a nominal width wider than the footing and is recommended to consist of a minimum of 3 sack cement sand CDF. We recommend that no fly ash or larger aggregate than sand be utilized in the mix design. The CDF should also be appropriately consolidated during placement.

It may be more economical, with less earthwork to utilize a four sided culvert, which will allow for continuous base support of the structure. If a four sided culvert is utilized, then we recommend that the culvert be supported with a minimum of 3 feet of compacted, import, granular, structural fill compacted to 95 percent. A woven geotextile should also be utilized at the base and sidewalls of the overexcavation as described above.

Bearing Capacity Recommendations

Retaining Wall

Foundation support for the proposed retaining wall may be provided by competent native soil, or compacted import structural fill placed directly over the undisturbed, native soil. We anticipate that competent native soil will be encountered at approximately 2 to 4 feet below the existing graded where we encountered very stiff/medium dense clayey sand/sandy clay.

Assuming the above foundation support criteria are satisfied, the retaining wall founded directly on suitable native soil or properly compacted structural fill placed directly over suitable native soil may be proportioned using a maximum net allowable soil bearing pressure of 2,500 pounds per square foot (psf). The term "net allowable bearing pressure" refers to the pressure that can be imposed on the soil at foundation level resulting from the total of all dead plus live loads, exclusive of the weight of the foundation or any backfill placed above the foundation. The net allowable bearing pressure may be increased by one-third for transient wind or seismic loads.

Box Culvert

Foundation support for the proposed box culvert may be provided by lean concrete (CDF trenches) or compacted import structural fill placed as recommended above over undisturbed, native soil. We anticipate that CDF trenches will extend to a depth of approximately 8 feet below existing creek elevation. Depending on the type of culvert utilized and the method of excavation, we anticipate that gravel replacement depths will range from approximately 3 feet to 5 feet below the base of footing and/or box culvert elevation. The recommended overexcavation depths will need to be field fit based on the actual conditions encountered and will need to be verified at the time of construction.

Assuming the above gravel or CDF replacement support criteria are satisfied, the box culvert founded directly on CDF or properly compacted structural fill placed directly over suitable native soil may be proportioned using a maximum net allowable soil bearing pressure of 2,500 pounds per square foot (psf). The term "net allowable bearing pressure" refers to the pressure that can be imposed on the soil at foundation level resulting from the total of all dead plus live loads, exclusive of the weight of the foundation or any backfill placed above the foundation. The net allowable bearing pressure may be increased by one-third for transient wind or seismic loads.

Resistance to Lateral Loads

The lateral earth pressures that develop against retaining walls will depend on the method of backfill placement, degree of compaction, slope of backfill, type of backfill material, provisions for drainage, magnitude and location of any adjacent surcharge loads, and the degree to which the wall can yield laterally during or after placement of

backfill. If the wall is allowed to rotate or yield so the top of the wall moves an amount equal to or greater than about 0.001 to 0.002 times its height (a yielding wall), the soil pressure exerted will be the active soil pressure. When a wall is restrained against lateral movement or tilting (a nonyielding wall), the soil pressure exerted is the at-rest soil pressure. Wall restraint may develop if a rigid structural network is constructed prior to backfilling or the wall is inherently stiff.

We recommend that yielding walls under drained conditions be designed for an equivalent fluid density of 35 pounds per cubic ft (pcf) for a slightly gravelly, silty sand backfill in active soil conditions. Nonyielding walls under drained conditions should be designed for an equivalent fluid density of 55 pcf for the slightly gravelly, silty sand backfill in at-rest conditions. Design of walls should include appropriate lateral pressures caused by surcharge loads located within a horizontal distance equal to or less than the height of the wall. For uniform surcharge pressures, a uniformly distributed lateral pressure equal to 35 percent and 50 percent of the vertical surcharge pressure should be added to the lateral soil pressures for yielding and nonyielding walls, respectively. Lateral pressures will also increase if a more fine grained backfill is utilized or walls are immediately adjacent to cut fine grained (clay) native soil conditions.

Lateral loads may be resisted by passive earth pressures developed against the side of the foundation. For design purposes, the passive resistance of well-compacted fill placed against the sides of the retaining wall may be considered equivalent to a fluid with a density of 250 pcf. A safety factor of 1.5 is included in this design value. This value assumes drained conditions that will prevent the buildup of hydrostatic pressure in the compacted fill. These values are based on the assumption of a horizontal surface of at least 2 times the depth of embedment in the direction of movement. The upper 12 inches of passive resistance should be neglected if the soil is not covered by slabs or pavement. If future plans call for the removal of the soil providing resistance, then the passive resistance should not be considered.

An allowable coefficient of base friction of 0.33, applied to vertical dead loads only, may be utilized between the base of the footing and the underlying soil when foundation elements are placed on gravelly, silty sand. An allowable coefficient of base friction of 0.25, applied to vertical dead loads only, may be utilized between the base of the footing and the underlying native soil when foundation elements are placed directly on suitably prepared fine grained native soil subgrades. A safety factor of 1.5 is included in the base friction design value. We do not recommend increasing the coefficient of friction to resist seismic or wind loads.

Wall and Site Drainage

To reduce the potential for excessive lateral earth pressures located behind retaining walls, we recommend that a footing drain system be implemented into the wall design. The drain should consist of a minimum 4-inch diameter perforated PVC pipe, surrounded by a minimum 12 inches of filtering media with the discharge sloped to carry water to a suitable collection system and/or discharge location. The filtering media may consist of open-graded drain rock wrapped by a nonwoven geotextile fabric (such as Mirafi 140N, or equivalent) or a graded sand and gravel filter. The drainage backfill should contain less than 3 percent by weight passing the U.S. Standard No. 200 sieve (based on a wet sieve analysis of that portion passing the U.S. Standard No. 4 sieve). The drainage backfill should be carried up the back of the wall to within approximately 1 foot of the

surface. The invert of the footing drain pipe should be placed at approximately the same elevation as the bottom of the wall/footing. The footing drain should discharge to an appropriate drainage system and include cleanouts to allow periodic maintenance and inspection.

Surface water should not be allowed to pond and soak into the ground surface immediately behind any retaining walls either during or after construction. Construction excavations, where appropriate, should be sloped to drain to sumps where water from groundwater seepage, rainfall, and runoff can be collected and pumped to a suitable discharge facility.

Surface water runoff must not be allowed to flow over the face of any site retaining walls. To reduce the chance of initiating instability, drain water collected from impervious surfaces should be collected and tightlined to a suitable discharge point.

Box culvert installation will not require any drainage provisions. However design of the culvert installation should not allow the potential for any creek flow to undermine and/or erode adjacent to the proposed culvert location. Excessive erosion adjacent to or below the proposed box culvert may result in road shoulder and/or drive lane support failure.

As the complete roadway improvement project is still in the final design phase, we are available to provide additional soil parameters and/or design recommendations as the need arises. We are also available to provide any modular block and/or rockery wall design services for the project, if applicable.

Geotechnical Consultation and Construction Monitoring

We recommend that geotechnical construction monitoring services be provided. These services should include observation by geotechnical personnel during subgrade preparation operations and any fill placement/compaction activities to verify that design subgrade conditions are obtained beneath the proposed project improvements. We also recommend that periodic field density testing be performed, if necessary, to verify that the appropriate degree of compaction is obtained. The purpose of these services would be to observe compliance with the project design concepts, civil drawings, specifications, and recommendations of this report, and in the event subsurface conditions differ from those anticipated before the start of construction, provide revised recommendations appropriate to the conditions revealed during construction. GeoTest Services would be pleased to provide these services for you.

USE OF THIS REPORT

GeoTest Services has prepared this report for the exclusive use of the Reichhardt & Ebe Engineering and their design consultants for specific application to the design of the proposed Main Street Roadway Improvements Phase 2b located in Ferndale, Washington. Use of this report by others is at the user's sole risk. This report is not applicable to other projects. Our services have been conducted in accordance with generally accepted practices of the geotechnical engineering profession; no other warranty, either expressed or implied, is made as to the professional advice included in this report.

Our site explorations indicate subsurface conditions at the dates and locations indicated. It is not warranted that they are representative of subsurface conditions at other locations and times. The analyses, conclusions, and recommendations contained in this report are based on site conditions to the limited depth of our explorations at the time of our exploration program, a brief geological reconnaissance of the area, and review of published geological information for the site. We assume that the explorations are representative of the subsurface conditions throughout the site during the preparation of our recommendations. If variations in subsurface conditions are encountered during construction, we should be notified for review of the recommendations of this report, and revision of such if necessary. If there is a substantial lapse of time between submission of this report and the start of construction, or if conditions change due to construction operations at or adjacent to the project site, we recommend that we review this report to determine the applicability of the conclusions and recommendations contained herein.

The site contractor is responsible to perform all work in conformance with all applicable WISHA/OSHA regulations. GeoTest Services, Inc. should not be assumed to be responsible for job site safety on this project, and this responsibility is specifically disclaimed.

We appreciate the opportunity to provide geotechnical services on this project and look forward to assisting you during the construction phase. If you have any questions regarding the information contained in this report, or if we may be of further service, please contact the undersigned.

Respectfully Submitted,
GeoTest Services, Inc.

Daniel Goger E.I.T.
Engineer in Training

State of Washington
Engineering Geologist
594
Licensed Geologist
Daniel J. Sorenson

DONG-SOO LEE
STATE OF WASHINGTON
42610
REGISTERED
PROFESSIONAL ENGINEER
EXPIRES 12/20/12

Dan Sorenson, L.E.G.
Engineering Geologist

Dong-Soo Lee, P.E.
Geotechnical Engineer

Attachments:

Figure 1	Site and Exploration Plan
Figure 2	Soil and Classification Sheet
Figures 3&4	Hand Auger Test Pit Logs
Figure 5	Grain Size Test Data
Figure 6	Plasticity Chart
Wildcat Dynamic Cone Penetrometer Logs (6 pages)	

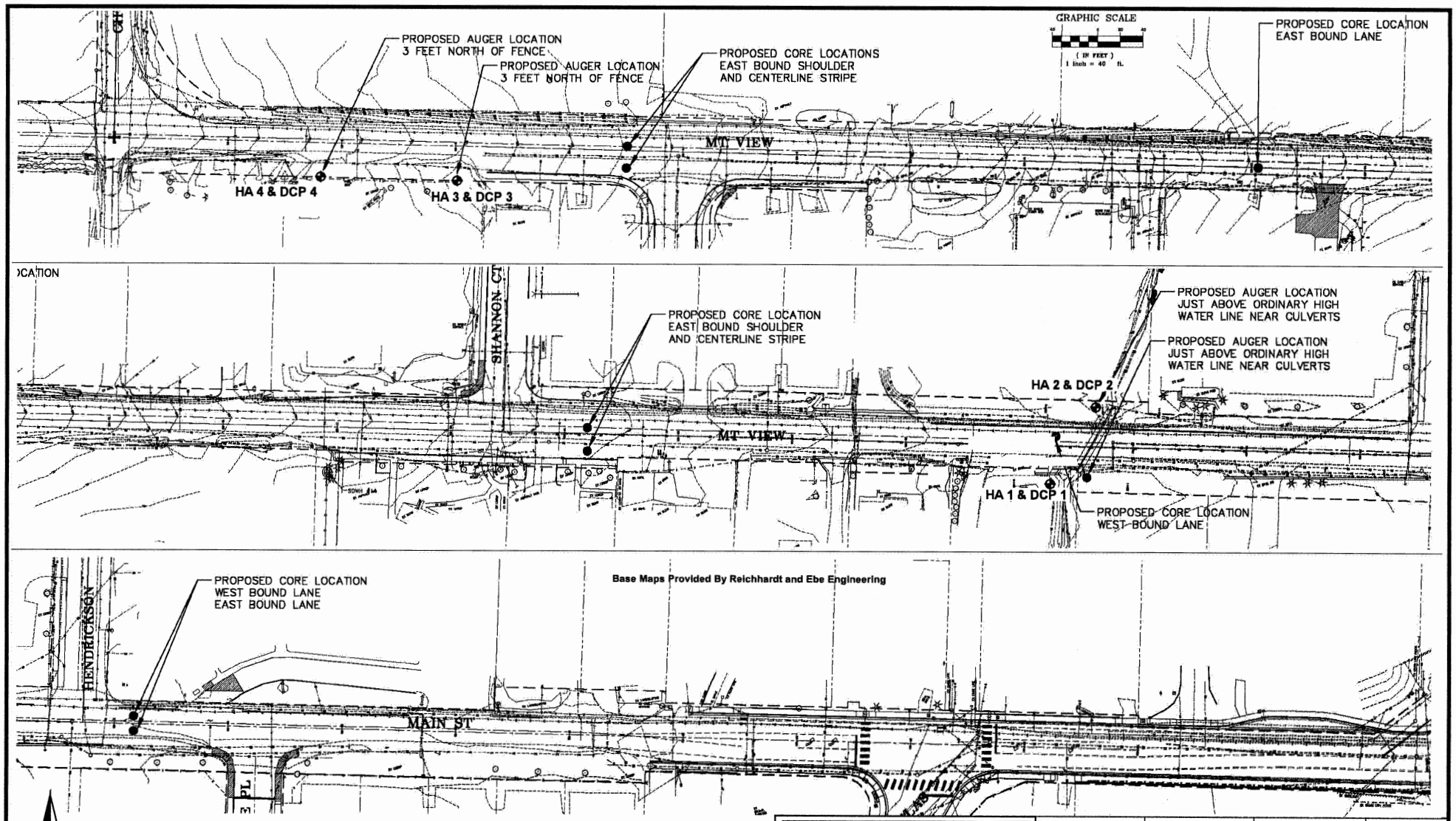

HA # & DCP # - APPROXIMATE LOCATION OF HAND AUGER TEST PIT AND DCP EXPLORATION

GEOTEST SERVICES, INC.
741 Marine Drive
Bellingham, WA 98225
phone: (360) 733-7318
fax: (360) 733-7418

Date 1-30-12	By: DG	Scale: As Shown	Project
SITE AND EXPLORATION PLAN **PROPOSED MAIN STREET IMPROVEMENTS - PHASE 2B** **MAIN STREET** **FERNDALE, WASHINGTON**			**11-0613** FIGURE **1**

Soil Classification System

MAJOR DIVISIONS			GRAPHIC SYMBOL	USCS LETTER SYMBOL	TYPICAL DESCRIPTIONS[1][2]
COARSE-GRAINED SOIL (More than 50% of material is larger than No. 200 sieve size)	GRAVEL AND GRAVELLY SOIL (More than 50% of coarse fraction retained on No. 4 sieve)	CLEAN GRAVEL (Little or no fines)		GW	Well-graded gravel; gravel/sand mixture(s); little or no fines
				GP	Poorly graded gravel; gravel/sand mixture(s); little or no fines
		GRAVEL WITH FINES (Appreciable amount of fines)		GM	Silty gravel; gravel/sand/silt mixture(s)
				GC	Clayey gravel; gravel/sand/clay mixture(s)
	SAND AND SANDY SOIL (More than 50% of coarse fraction passed through No. 4 sieve)	CLEAN SAND (Little or no fines)		SW	Well-graded sand; gravelly sand; little or no fines
				SP	Poorly graded sand; gravelly sand; little or no fines
		SAND WITH FINES (Appreciable amount of fines)		SM	Silty sand; sand/silt mixture(s)
				SC	Clayey sand; sand/clay mixture(s)
FINE-GRAINED SOIL (More than 50% of material is smaller than No. 200 sieve size)	SILT AND CLAY (Liquid limit less than 50)			ML	Inorganic silt and very fine sand; rock flour; silty or clayey fine sand or clayey silt with slight plasticity
				CL	Inorganic clay of low to medium plasticity; gravelly clay; sandy clay; silty clay; lean clay
				OL	Organic silt; organic, silty clay of low plasticity
	SILT AND CLAY (Liquid limit greater than 50)			MH	Inorganic silt; micaceous or diatomaceous fine sand
				CH	Inorganic clay of high plasticity; fat clay
				OH	Organic clay of medium to high plasticity; organic silt
	HIGHLY ORGANIC SOIL			PT	Peat; humus; swamp soil with high organic content

OTHER MATERIALS	GRAPHIC SYMBOL	LETTER SYMBOL	TYPICAL DESCRIPTIONS
PAVEMENT		AC or PC	Asphalt concrete pavement or Portland cement pavement
ROCK		RK	Rock (See Rock Classification)
WOOD		WD	Wood, lumber, wood chips
DEBRIS		DB	Construction debris, garbage

Notes:
1. Soil descriptions are based on the general approach presented in the *Standard Practice for Description and Identification of Soils (Visual-Manual Procedure)*, as outlined in ASTM D 2488. Where laboratory index testing has been conducted, soil classifications are based on the *Standard Test Method for Classification of Soils for Engineering Purposes*, as outlined in ASTM D 2487.
2. Soil description terminology is based on visual estimates (in the absence of laboratory test data) of the percentages of each soil type and is defined as follows:

Primary Constituent:	> 50% - "GRAVEL," "SAND," "SILT," "CLAY," etc.
Secondary Constituents:	> 30% and ≤ 50% - "very gravelly," "very sandy," "very silty," etc.
	> 12% and ≤ 30% - "gravelly," "sandy," "silty," etc.
Additional Constituents:	> 5% and ≤ 12% - "slightly gravelly," "slightly sandy," "slightly silty," etc.
	≤ 5% - "trace gravel," "trace sand," "trace silt," etc., or not noted.

Drilling and Sampling Key

SAMPLE NUMBER & INTERVAL

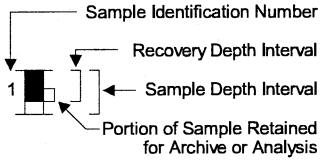

SAMPLER TYPE

Code	Description
a	3.25-inch O.D., 2.42-inch I.D. Split Spoon
b	2.00-inch O.D., 1.50-inch I.D. Split Spoon
c	Shelby Tube
d	Grab Sample
e	Other - See text if applicable
1	300-lb Hammer, 30-inch Drop
2	140-lb Hammer, 30-inch Drop
3	Pushed
4	Other - See text if applicable

Groundwater

▽ ATD — Approximate water elevation at time of drilling (ATD) or on date noted. Groundwater levels can fluctuate due to precipitation, seasonal conditions, and other factors.

Field and Lab Test Data

Code	Description
PP = 1.0	Pocket Penetrometer, tsf
TV = 0.5	Torvane, tsf
PID = 100	Photoionization Detector VOC screening, ppm
W = 10	Moisture Content, %
D = 120	Dry Density, pcf
-200 = 60	Material smaller than No. 200 sieve, %
GS	Grain Size - See separate figure for data
AL	Atterberg Limits - See separate figure for data
GT	Other Geotechnical Testing
CA	Chemical Analysis

GEOTEST

Main Street Improvements, Phase 2b
Ferndale, WA

Soil Classification System and Key

Figure 2

HA-1

SAMPLE DATA			SOIL PROFILE			GROUNDWATER
Depth (ft)	Sample Number & Interval	Sampler Type	Test Data	Graphic Symbol	USCS Symbol	Excavation Method: Hand Auger Ground Elevation (ft): Not Determined	
0					CH/ OH	Very soft, brown, wet, organic, sandy CLAY (Topsoil), scattered debris	Groundwater not encountered.
2	1	d	W = 32			Slightly blue	
					CL/ CH	Very soft to soft, blue-gray, wet, slightly organic, fine, very sandy CLAY	
4	2	d	W = 38				
	3	d	W = 36 GS AL				
6							
8							
10							
12							
14							

Test Pit Completed 01/12/11
Total Depth of Test Pit = 5.5 ft.

HA-2

SAMPLE DATA			SOIL PROFILE			GROUNDWATER
Depth (ft)	Sample Number & Interval	Sampler Type	Test Data	Graphic Symbol	USCS Symbol	Excavation Method: Hand Auger Ground Elevation (ft): Not Determined	
0					CH/ OH	Very soft, brown, wet, organic, sandy CLAY (Topsoil), scattered ballast	Groundwater not encountered.
2	1	d	W = 43		CL/ CH	Very soft to soft, blue-gray, wet, slighlty organic, sandy CLAY, trace gravel	
4	2	d	W = 29 GS				
6							
8							
10							
12							
14							

Test Pit Completed 01/12/11
Total Depth of Test Pit = 4.3 ft.

Notes:
1. Stratigraphic contacts are based on field interpretations and are approximate.
2. Reference to the text of this report is necessary for a proper understanding of subsurface conditions.
3. Refer to "Soil Classification System and Key" figure for explanation of graphics and symbols.

11-0613 2/7/12 X:\0-PROJECTS GEO\00000-PROJECTS 2011-GEO\ROADS AND UTILITIES\R & E - 11-0613 - MAIN STREET IMPROVEMENTS PHASE 2B, FERNDALE\HA & DCP REPORT\GINT.GPJ TEST PIT LOG

GEOTEST

Main Street Improvements, Phase 2b
Ferndale, WA

Log of Test Pits

Figure 3

HA-3

SAMPLE DATA			SOIL PROFILE			GROUNDWATER
Sample Number & Interval	Sampler Type	Test Data	Graphic Symbol	USCS Symbol	Excavation Method: Hand Auger Ground Elevation (ft): Not Determined	
				CH/ OH	Very soft, brown, very organic, sandy CLAY	Moderate groundwater seepage encountered at 1.5 ft.
1	d	W = 67		SC/ CL	Soft to medium stiff, mottled tan, moist to wet, sandy CLAY Perched seepage at 1.5 feet	
2	d	W = 34				
3	d	W = 29 GS		SC/ CL	Very stiff/medium dense, brown-gray, moist, sandy CLAY to clayey SAND	

Depth (ft): 0, 2, 4, 6, 8, 10, 12, 14

Test Pit Completed 01/12/11
Total Depth of Test Pit = 4.8 ft.

HA-4

SAMPLE DATA			SOIL PROFILE			GROUNDWATER
Sample Number & Interval	Sampler Type	Test Data	Graphic Symbol	USCS Symbol	Excavation Method: Hand Auger Ground Elevation (ft): Not Determined	
				CH/ OH	Very soft, brown, very organic, sandy CLAY	Groundwater not encountered.
1	d	W = 24		SC/ CL	Soft, mottled tan, moist to wet, sandy CLAY	
1	d	W = 19 GS		SC	Medium dense, brown-gray, moist, gravelly, very clayey SAND	

Depth (ft): 0, 2, 4, 6, 8, 10, 12, 14

Test Pit Completed 01/12/11
Total Depth of Test Pit = 4.8 ft.

Notes:
1. Stratigraphic contacts are based on field interpretations and are approximate.
2. Reference to the text of this report is necessary for a proper understanding of subsurface conditions.
3. Refer to "Soil Classification System and Key" figure for explanation of graphics and symbols.

11-0613 2/7/12 X:\0-PROJECTS GEO\00000-PROJECTS 2011-GEO\ROADS AND UTILITIES\R & E - 11-0613 - MAIN STREET IMPROVEMENTS PHASE 2B, FERNDALE\HA & DCP REPORT\GINT.GPJ TEST PIT LOG

GEOTEST

Main Street Improvements, Phase 2b
Ferndale, WA

Log of Test Pits

Figure 4

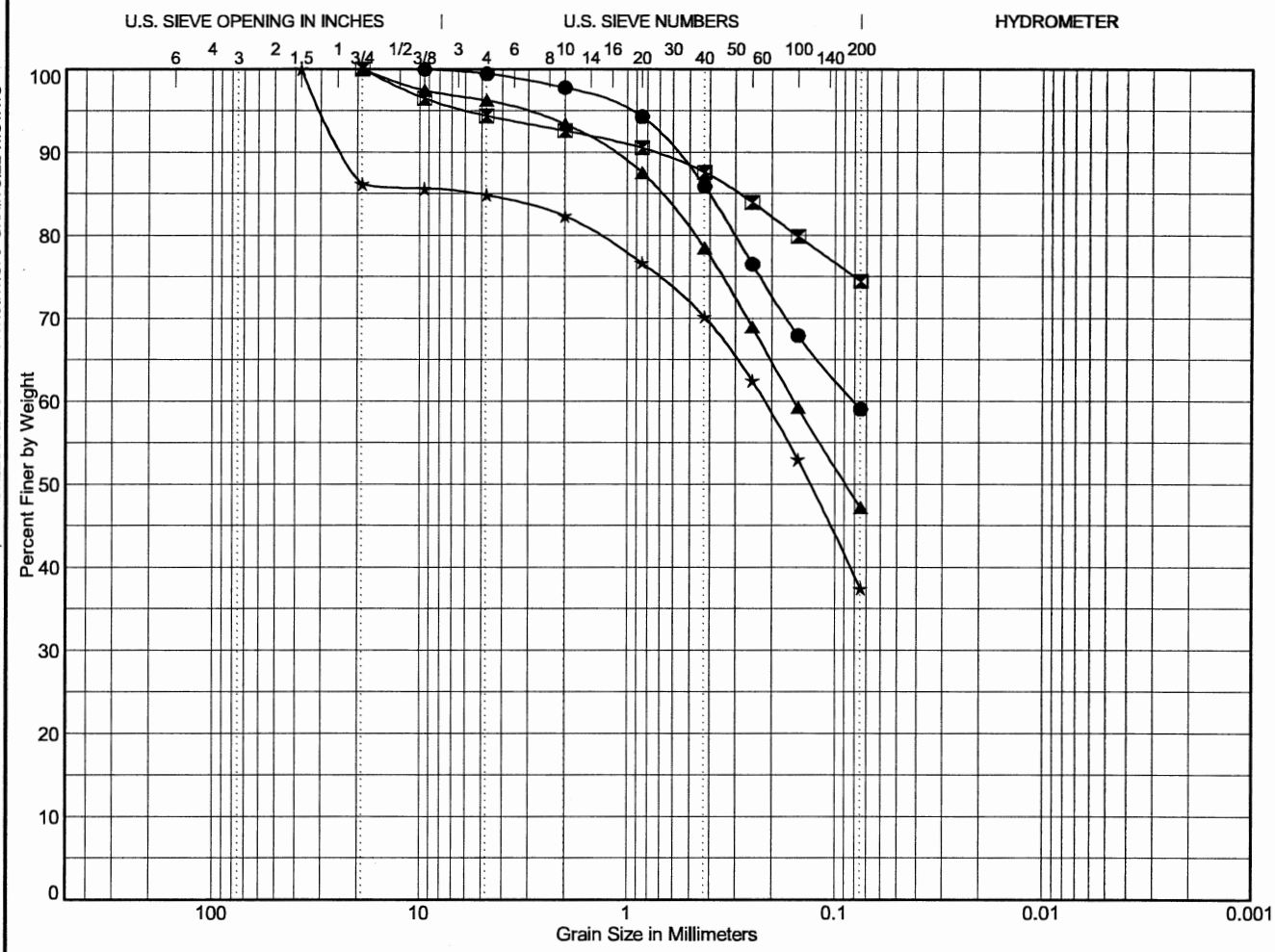

Cobbles	Gravel		Sand			Silt or Clay
	coarse	fine	coarse	medium	fine	

	Point	Depth	Classification	LL	PL	PI	C_c	C_u
●	HA-1	5.0	Fine, very sandy CLAY (CL/CH)	50	24	26		
⊠	HA-2	4.0	Sandy CLAY, trace gravel (CL/CH)					
▲	HA-3	4.5	Sandy Clay/Clayey SAND (SC/CL)					
★	HA-4	4.5	Gravelly, very clayey SAND (SC)					

	Point	Depth	D_{100}	D_{60}	D_{50}	D_{30}	D_{10}	%Coarse Gravel	% Fine Gravel	% Coarse Sand	% Medium Sand	% Fine Sand	% Fines
●	HA-1	5.0	9.5	0.081				0.0	0.5	1.7	11.9	26.9	59.0
⊠	HA-2	4.0	19					0.0	5.6	1.8	5.0	13.1	74.5
▲	HA-3	4.5	19	0.156	0.088			0.0	3.7	2.8	14.9	31.3	47.2
★	HA-4	4.5	37.5	0.219	0.131			13.8	1.3	2.5	12.2	32.7	37.4

$C_c = D_{30}^2/(D_{60} * D_{10})$

$C_u = D_{60}/D_{10}$

To be well graded: $1 < C_c < 3$ and $C_u > 4$ for GW or $C_u > 6$ for SW

GEOTEST

Main Street Improvements, Phase 2b
Ferndale, WA

Grain Size Test Data

Figure 5

11-0613 2/7/12 X:\0-PROJECTS GEO\00000-PROJECTS 2011-GEO\ROADS AND UTILITIES\R & E - 11-0613 - MAIN STREET IMPROVEMENTS PHASE 2B, FERNDALE\HA & DCP REPORT\GINT.GPJ GRAIN SIZE W/STATS

11-0613 2/8/12 X:\0-PROJECTS GEO\00000-PROJECTS 2011-GEO\ROADS AND UTILITIESIR & E - 11-0613 - MAIN STREET IMPROVEMENTS PHASE 2B, FERNDALE\HA & DCP REPORT\GINT.GPJ ATTERBERG LIMITS FIGURE

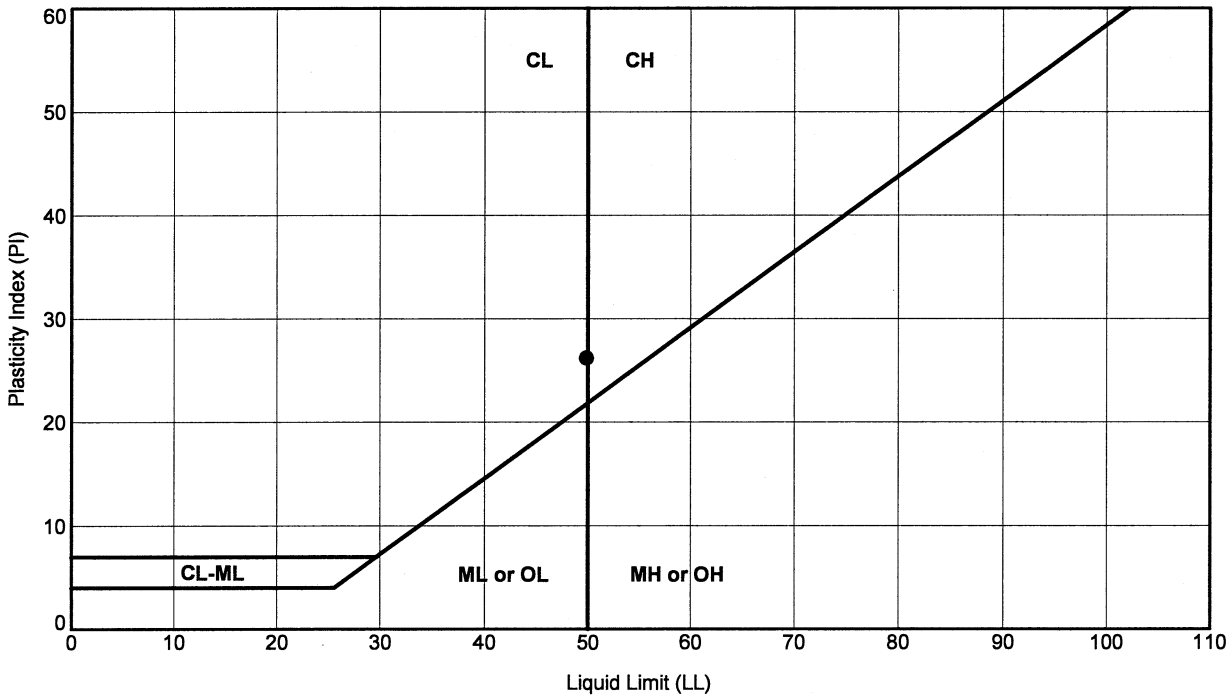

ATTERBERG LIMIT TEST RESULTS

Symbol	Exploration Number	Sample Number	Depth (ft)	Liquid Limit (%)	Plastic Limit (%)	Plasticity Index (%)	Natural Moisture (%)	Soil Description	Unified Soil Classification
●	HA-1	3	5.0	50	24	26	36	Fine, very sandy CLAY	CH

ASTM D 4318 Test Method

GEOTEST	Main Street Improvements, Phase 2b Ferndale, WA	Plasticity Chart	Figure 6

WILDCAT DYNAMIC CONE LOG

GeoTest Services, Inc.
741 Marine Drive
Bellingham, WA 98225

PROJECT NUMBER: 11-0613
DATE STARTED: 01-12-2011
DATE COMPLETED: 01-12-2011

HOLE #: DCP-1
CREW: DG/BF
PROJECT: Main St Improvements - Phase 2b
ADDRESS: Douglas Rd to Church Rd
LOCATION: Ferndale, WA

SURFACE ELEVATION: See Figure 1
WATER ON COMPLETION: None
HAMMER WEIGHT: 35 lbs.
CONE AREA: 10 sq. cm

DEPTH	BLOWS PER 10 cm	RESISTANCE Kg/cm²	GRAPH OF CONE RESISTANCE 0 50 100 150	N'	TESTED CONSISTENCY SAND & SILT	CLAY
-	4	17.8	•••••	5	LOOSE	MEDIUM STIFF
-	7	31.1	••••••••	8	LOOSE	MEDIUM STIFF
- 1 ft	1	4.4	•	1	VERY LOOSE	VERY SOFT
-	0	0.0		0	VERY LOOSE	VERY SOFT
-	0	0.0		0	VERY LOOSE	VERY SOFT
- 2 ft	0	0.0		0	VERY LOOSE	VERY SOFT
-	3	13.3	•••	3	VERY LOOSE	SOFT
-	1	4.4	•	1	VERY LOOSE	VERY SOFT
- 3 ft	0	0.0		0	VERY LOOSE	VERY SOFT
- 1 m	0	0.0		0	VERY LOOSE	VERY SOFT
-	2	7.7	••	2	VERY LOOSE	SOFT
- 4 ft	1	3.9	•	1	VERY LOOSE	VERY SOFT
-	3	11.6	•••	3	VERY LOOSE	SOFT
-	3	11.6	•••	3	VERY LOOSE	SOFT
- 5 ft	3	11.6	•••	3	VERY LOOSE	SOFT
-	4	15.4	••••	4	VERY LOOSE	SOFT
-	3	11.6	•••	3	VERY LOOSE	SOFT
- 6 ft	3	11.6	•••	3	VERY LOOSE	SOFT
-	4	15.4	••••	4	VERY LOOSE	SOFT
- 2 m	5	19.3	•••••	5	LOOSE	MEDIUM STIFF
- 7 ft	4	13.7	•••	3	VERY LOOSE	SOFT
-	4	13.7	•••	3	VERY LOOSE	SOFT
-	4	13.7	•••	3	VERY LOOSE	SOFT
- 8 ft	4	13.7	•••	3	VERY LOOSE	SOFT
-	4	13.7	•••	3	VERY LOOSE	SOFT
-	4	13.7	•••	3	VERY LOOSE	SOFT
- 9 ft	6	20.5	•••••	5	LOOSE	MEDIUM STIFF
-	7	23.9	••••••	6	LOOSE	MEDIUM STIFF
-	6	20.5	•••••	5	LOOSE	MEDIUM STIFF
- 3 m 10 ft	7	23.9	••••••	6	LOOSE	MEDIUM STIFF
-	7	21.4	••••••	6	LOOSE	MEDIUM STIFF
-	6	18.4	•••••	5	LOOSE	MEDIUM STIFF
-	6	18.4	•••••	5	LOOSE	MEDIUM STIFF
- 11 ft	7	21.4	••••••	6	LOOSE	MEDIUM STIFF
-	7	21.4	••••••	6	LOOSE	MEDIUM STIFF
-	7	21.4	••••••	6	LOOSE	MEDIUM STIFF
- 12 ft	6	18.4	•••••	5	LOOSE	MEDIUM STIFF
-	6	18.4	•••••	5	LOOSE	MEDIUM STIFF
-	8	24.5	•••••••	6	LOOSE	MEDIUM STIFF
- 4 m 13 ft	10	30.6	••••••••	8	LOOSE	MEDIUM STIFF

HOLE #: DCP-1

WILDCAT DYNAMIC CONE LOG

PROJECT: Main St Improvements - Phase 2b

PROJECT NUMBER: 11-0613

DEPTH	BLOWS PER 10 cm	RESISTANCE Kg/cm²	GRAPH OF CONE RESISTANCE 0 50 100 150	N'	TESTED CONSISTENCY SAND & SILT	TESTED CONSISTENCY CLAY
-	11	30.5	••••••••	8	LOOSE	MEDIUM STIFF
-	10	27.7	••••••••	7	LOOSE	MEDIUM STIFF
- 14 ft	10	27.7	••••••••	7	LOOSE	MEDIUM STIFF
-	11	30.5	••••••••	8	LOOSE	MEDIUM STIFF
-	11	30.5	••••••••	8	LOOSE	MEDIUM STIFF
- 15 ft	11	30.5	••••••••	8	LOOSE	MEDIUM STIFF
-	12	33.2	•••••••••	9	LOOSE	STIFF
-	12	33.2	•••••••••	9	LOOSE	STIFF
- 16 ft	14	38.8	••••••••••••	11	MEDIUM DENSE	STIFF
- 5 m						
-						
- 17 ft						
-						
-						
- 18 ft						
-						
-						
- 19 ft						
-						
- 6 m						
- 20 ft						
-						
-						
- 21 ft						
-						
-						
- 22 ft						
-						
-						
- 7 m 23 ft						
-						
-						
- 24 ft						
-						
-						
- 25 ft						
-						
-						
- 26 ft						
- 8 m						
-						
- 27 ft						
-						
-						
- 28 ft						
-						
-						
- 29 ft						
-						
- 9 m						

WILDCAT DYNAMIC CONE LOG

GeoTest Services, Inc.
741 Marine Drive
Bellingham, WA 98225

PROJECT NUMBER: 11-0613
DATE STARTED: 01-12-2011
DATE COMPLETED: 01-12-2011

HOLE #: DCP-2
CREW: DG/BF
PROJECT: Main St Improvements - Phase 2b
ADDRESS: Douglas Rd to Church Rd
LOCATION: Ferndale, WA

SURFACE ELEVATION: See Figure 1
WATER ON COMPLETION: None
HAMMER WEIGHT: 35 lbs.
CONE AREA: 10 sq. cm

DEPTH	BLOWS PER 10 cm	RESISTANCE Kg/cm²	GRAPH OF CONE RESISTANCE 0 50 100 150	N'	TESTED CONSISTENCY SAND & SILT	TESTED CONSISTENCY CLAY
-	0	0.0		0	VERY LOOSE	VERY SOFT
-	6	26.6	•••••••	7	LOOSE	MEDIUM STIFF
- 1 ft	9	40.0	••••••••••••	11	MEDIUM DENSE	STIFF
-	25	111.0	••••••••••••••••••••••••••••••••	-	DENSE	HARD
-	1	4.4	•	1	VERY LOOSE	VERY SOFT
- 2 ft	0	0.0		0	VERY LOOSE	VERY SOFT
-	8	35.5	••••••••••	10	LOOSE	STIFF
-	1	4.4	•	1	VERY LOOSE	VERY SOFT
- 3 ft	0	0.0		0	VERY LOOSE	VERY SOFT
- 1 m	3	13.3	•••	3	VERY LOOSE	SOFT
-	3	11.6	•••	3	VERY LOOSE	SOFT
- 4 ft	2	7.7	••	2	VERY LOOSE	SOFT
-	3	11.6	•••	3	VERY LOOSE	SOFT
-	3	11.6	•••	3	VERY LOOSE	SOFT
- 5 ft	2	7.7	••	2	VERY LOOSE	SOFT
-	3	11.6	•••	3	VERY LOOSE	SOFT
-	3	11.6	•••	3	VERY LOOSE	SOFT
- 6 ft	3	11.6	•••	3	VERY LOOSE	SOFT
-	4	15.4	••••	4	VERY LOOSE	SOFT
- 2 m	4	15.4	••••	4	VERY LOOSE	SOFT
- 7 ft	4	13.7	•••	3	VERY LOOSE	SOFT
-	5	17.1	••••	4	VERY LOOSE	SOFT
-	6	20.5	•••••	5	LOOSE	MEDIUM STIFF
- 8 ft	6	20.5	•••••	5	LOOSE	MEDIUM STIFF
-	6	20.5	•••••	5	LOOSE	MEDIUM STIFF
-	6	20.5	•••••	5	LOOSE	MEDIUM STIFF
- 9 ft	6	20.5	•••••	5	LOOSE	MEDIUM STIFF
-	6	20.5	•••••	5	LOOSE	MEDIUM STIFF
-	6	20.5	•••••	5	LOOSE	MEDIUM STIFF
- 3 m 10 ft	8	27.4	•••••••	7	LOOSE	MEDIUM STIFF
-	6	18.4	•••••	5	LOOSE	MEDIUM STIFF
-	7	21.4	••••••	6	LOOSE	MEDIUM STIFF
-	7	21.4	••••••	6	LOOSE	MEDIUM STIFF
- 11 ft	7	21.4	••••••	6	LOOSE	MEDIUM STIFF
-	7	21.4	••••••	6	LOOSE	MEDIUM STIFF
-	7	21.4	••••••	6	LOOSE	MEDIUM STIFF
- 12 ft	7	21.4	••••••	6	LOOSE	MEDIUM STIFF
-	7	21.4	••••••	6	LOOSE	MEDIUM STIFF
-	6	18.4	•••••	5	LOOSE	MEDIUM STIFF
- 4 m 13 ft	8	24.5	•••••••	6	LOOSE	MEDIUM STIFF

HOLE #: DCP-2

WILDCAT DYNAMIC CONE LOG

PROJECT: Main St Improvements - Phase 2b

PROJECT NUMBER: 11-0613

DEPTH	BLOWS PER 10 cm	RESISTANCE Kg/cm²	GRAPH OF CONE RESISTANCE 0 50 100 150	N'	TESTED CONSISTENCY SAND & SILT	TESTED CONSISTENCY CLAY
	10	27.7	••••••••	7	LOOSE	MEDIUM STIFF
	11	30.5	••••••••	8	LOOSE	MEDIUM STIFF
14 ft	12	33.2	•••••••••	9	LOOSE	STIFF
	13	36.0	••••••••••	10	LOOSE	STIFF
	13	36.0	••••••••••	10	LOOSE	STIFF
15 ft						
16 ft						
5 m						
17 ft						
18 ft						
19 ft						
6 m						
20 ft						
21 ft						
22 ft						
7 m 23 ft						
24 ft						
25 ft						
26 ft						
8 m						
27 ft						
28 ft						
29 ft						
9 m						

WILDCAT DYNAMIC CONE LOG

GeoTest Services, Inc.
741 Marine Drive
Bellingham, WA 98225

PROJECT NUMBER: 11-0613
DATE STARTED: 01-12-2011
DATE COMPLETED: 01-12-2011

HOLE #: DCP-3
CREW: DG/BF
PROJECT: Main St Improvements - Phase 2b
ADDRESS: Douglas Rd to Church Rd
LOCATION: Ferndale, WA

SURFACE ELEVATION: See Figure 1
WATER ON COMPLETION: None
HAMMER WEIGHT: 35 lbs.
CONE AREA: 10 sq. cm

DEPTH	BLOWS PER 10 cm	RESISTANCE Kg/cm²	GRAPH OF CONE RESISTANCE 0 50 100 150	N'	TESTED CONSISTENCY SAND & SILT	TESTED CONSISTENCY CLAY
-	0	0.0		0	VERY LOOSE	VERY SOFT
-	1	4.4	•	1	VERY LOOSE	VERY SOFT
- 1 ft	0	0.0		0	VERY LOOSE	VERY SOFT
-	1	4.4	•	1	VERY LOOSE	VERY SOFT
-	0	0.0		0	VERY LOOSE	VERY SOFT
- 2 ft	1	4.4	•	1	VERY LOOSE	VERY SOFT
-	0	0.0		0	VERY LOOSE	VERY SOFT
-	6	26.6	•••••••	7	LOOSE	MEDIUM STIFF
- 3 ft	6	26.6	•••••••	7	LOOSE	MEDIUM STIFF
- 1 m	7	31.1	••••••••	8	LOOSE	MEDIUM STIFF
-	5	19.3	•••••	5	LOOSE	MEDIUM STIFF
- 4 ft	5	19.3	•••••	5	LOOSE	MEDIUM STIFF
-	15	57.9	••••••••••••••••	16	MEDIUM DENSE	VERY STIFF
-	23	88.8	••••••••••••••••••••••••••	25	MEDIUM DENSE	VERY STIFF
- 5 ft	22	84.9	••••••••••••••••••••••••	24	MEDIUM DENSE	VERY STIFF
-	16	61.8	••••••••••••••••••	17	MEDIUM DENSE	VERY STIFF
-	21	81.1	••••••••••••••••••••••••	23	MEDIUM DENSE	VERY STIFF
- 6 ft	23	88.8	••••••••••••••••••••••••••	25	MEDIUM DENSE	VERY STIFF
-	25	96.5	••••••••••••••••••••••••••••	-	MEDIUM DENSE	VERY STIFF
- 2 m	25	96.5	••••••••••••••••••••••••••••	-	MEDIUM DENSE	VERY STIFF
- 7 ft	27	92.3	••••••••••••••••••••••••••	-	MEDIUM DENSE	VERY STIFF
-	31	106.0	••••••••••••••••••••••••••••••	-	MEDIUM DENSE	VERY STIFF
-	32	109.4	•••••••••••••••••••••••••••••••	-	DENSE	HARD
- 8 ft	34	116.3	••••••••••••••••••••••••••••••••	-	DENSE	HARD
-	37	126.5	••••••••••••••••••••••••••••••••••	-	DENSE	HARD
-	41	140.2	••••••••••••••••••••••••••••••••••••••	-	DENSE	HARD
- 9 ft	42	143.6	•••••••••••••••••••••••••••••••••••••••	-	DENSE	HARD
-	46	157.3	••	-	DENSE	HARD
-	46	157.3	••	-	DENSE	HARD
- 3 m 10 ft						
-						
-						
-						
- 11 ft						
-						
-						
- 12 ft						
-						
-						
- 4 m 13 ft						

WILDCAT DYNAMIC CONE LOG

GeoTest Services, Inc.
741 Marine Drive
Bellingham, WA 98225

PROJECT NUMBER: 11-0613
DATE STARTED: 01-12-2011
DATE COMPLETED: 01-12-2011

HOLE #: DCP-4
CREW: DG/BF
PROJECT: Main St Improvements - Phase 2b
ADDRESS: Douglas Rd to Church Rd
LOCATION: Ferndale, WA

SURFACE ELEVATION: See Figure 1
WATER ON COMPLETION: None
HAMMER WEIGHT: 35 lbs.
CONE AREA: 10 sq. cm

DEPTH	BLOWS PER 10 cm	RESISTANCE Kg/cm²	GRAPH OF CONE RESISTANCE 0 50 100 150	N'	TESTED CONSISTENCY SAND & SILT	TESTED CONSISTENCY CLAY
-	0	0.0		0	VERY LOOSE	VERY SOFT
-	1	4.4	•	1	VERY LOOSE	VERY SOFT
- 1 ft	0	0.0		0	VERY LOOSE	VERY SOFT
-	1	4.4	•	1	VERY LOOSE	VERY SOFT
-	7	31.1	•••••••••	8	LOOSE	MEDIUM STIFF
- 2 ft	12	53.3	••••••••••••••••	15	MEDIUM DENSE	STIFF
-	9	40.0	••••••••••••	11	MEDIUM DENSE	STIFF
-	8	35.5	••••••••••	10	LOOSE	STIFF
- 3 ft	8	35.5	••••••••••	10	LOOSE	STIFF
- 1 m	8	35.5	••••••••••	10	LOOSE	STIFF
-	10	38.6	••••••••••••	11	MEDIUM DENSE	STIFF
- 4 ft	13	50.2	••••••••••••••	14	MEDIUM DENSE	STIFF
-	20	77.2	••••••••••••••••••••••	22	MEDIUM DENSE	VERY STIFF
-	25	96.5	••••••••••••••••••••••••••••	-	MEDIUM DENSE	VERY STIFF
- 5 ft	27	104.2	••••••••••••••••••••••••••••••	-	MEDIUM DENSE	VERY STIFF
-	34	131.2	••••••••••••••••••••••••••••••••••••	-	DENSE	HARD
-	37	142.8	••	-	DENSE	HARD
- 6 ft	38	146.7	••	-	DENSE	HARD
-	36	139.0	••••••••••••••••••••••••••••••••••••••	-	DENSE	HARD
- 2 m	38	146.7	••	-	DENSE	HARD
- 7 ft	41	140.2	••••••••••••••••••••••••••••••••••••••	-	DENSE	HARD
-	44	150.5	••	-	DENSE	HARD
-	43	147.1	••	-	DENSE	HARD
- 8 ft	47	160.7	••	-	DENSE	HARD
-						
-						
- 9 ft						
-						
-						
- 3 m 10 ft						
-						
-						
-						
- 11 ft						
-						
-						
- 12 ft						
-						
-						
- 4 m 13 ft						

GEOTEST

741 Marine Drive
Bellingham, WA 98225

20611-67th Avenue NE
Arlington, WA 98223

PHONE
360 733_7318

TOLL FREE
888 251_5276

FAX
360 733_7418

January 17, 2012
Job No. 11-0613

Reichhardt and Ebe Engineering
PO Box 978
Lynden, WA 98264

Attn: Mike Kooy, P.E.

Re: Road Core Summary
Main Street Improvements, Phase 2b
Douglas Road to Church Road
Ferndale, Washington

Dear Mr. Kooy:

This report presents the results of our road core investigation for the proposed Main Street Improvement Project, Phase 2b in Ferndale, Washington. The approximate locations of the road cores are shown on the Site and Exploration Plan, Figure 1. Our services were completed in accordance with your request.

PROJECT DESCRIPTION

We understand that there are plans to improve the section of Main Street, between Douglas Road and Church Road. It is our understanding that road improvements likely consisting of curb and gutters, sidewalks, retaining walls, culvert replacement, asphalt concrete pavement overlays and/or replacement as well as possible utility improvements. As a part of the planned road improvement project, evaluation of the existing road condition was necessary. Accordingly, we advanced eight road cores, at the selected locations by Reichhardt and Ebe Engineering, to evaluate the existing asphalt thickness and subgrade materials. Our pavement cores were then correlated with the referenced city standard for arterials and collectors, R-1.

ROAD CORE SUMMARY

On January 10, 2012, GeoTest Services completed a total of eight road cores using a concrete/asphalt core machine. The road cores were located on Main Street between Douglas Road and Church Road as shown on the R&E Core/Auger Location Exhibit dated 12-23-11. Upon completion, each of the road cores was backfilled and compacted with the removed soil up to the existing base of pavement elevation. The cores were then patched with EZ-Street asphalt cold patch matching the existing pavement thicknesses at each of our exploration location. A summary of our findings is shown in Table 1 below. The approximate locations and stationing for each of the road core explorations are shown on the Site and Exploration Plan, Figure 1, attached within this report.

TABLE 1
ROAD CORE RESULTS

Road Core Number	Approximate Stationing	Asphalt Thickness (inches)	Subgrade Material	Total Depth Explored (inches)	Additional Comments
RC-1	7+41 1' right of fog line in shoulder (see Figure 1)	4.0	4.0" of Crushed Gravel over 9" Pit Run (Full depth of pit run not determined)	17.0	Multiple Asphalt Layers/In Shoulder Improvement
RC-2	7+43 1' left of C.L. (see Figure 1)	3.0	0.5-1.0" of Crushed Gravel over 11" Pit Run (Full depth of pit run not determined)	15.0	Multiple Asphalt Layers
RC-3	13+02 ~4' right of C.L. (see Figure 1)	2.75	0.5-1.0" of Crushed Gravel over 10.5" Pit Run (Full depth of pit run not determined)	14.0	Multiple Asphalt Layers
RC-4	19+20 3' right of fog line in shoulder (see Figure 1)	9.0	9" Pit Run – Woven Geotextile Fabric at Bottom	18.0	Multiple Asphalt Layers
RC-5	19+20 On C.L. (see Figure 1)	5.0	2-3" of Crushed Gravel over 3" Pit Run (Full depth of pit run not determined)	10.0	Multiple Asphalt Layers
RC-6	23+50 ~4' left of C.L. (see Figure 1)	5.5	2-3" of Crushed Gravel over 3.0" Pit Run (Full depth of pit run not determined)	11.0	Multiple Asphalt Layers
RC-7	27+20 ~4' right of C.L. (see Figure 1)	7.0	Asphalt overlying apparent concrete	8.0	Multiple Asphalt Layers
RC-8	27+25 ~4' left of C.L. (see Figure 1)	7.0	Asphalt overlying apparent concrete	8.0	Multiple Asphalt Layers only 4.5" of Asphalt Recovered

CONCLUSION

In general, the existing asphalt conditions varied significantly. Typically, most areas demonstrated signs of wear including some moderate rutting and variable cracking throughout the road. Typically cracking was notice more toward the west while rutting was observed more towards the east. The asphalt thickness ranged from approximately 2.75 to 9.0 inches thick. The existing asphalt appears to have been composed of a minimum of 2 to 3 pavement layers (overlays) with intermixed chip seal coatings.

Within core locations (RC-7 and RC-8), the original concrete road (slab) was apparently encountered directly below the asphalt at approximately 7 inches below the top of asphalt. Where encountered, we assume that the underlying concrete pavement is a minimum of 6 inches in thickness. No concrete was encountered in the remaining road

cores. The subgrade below the asphalt in the remaining road cores (RC-1 through RC-6) consisted of approximately 0 to 4 inches of crushed gravel over imported pit run fill generally described as brown to gray, dense, damp, sandy gravel to gravelly sand with trace cobbles. All of our explorations were explored by hand to the deepest depth reasonably achievable.

Pavement Section Correlation

Design Standard

Typical layer coefficients (per inch) assigned to the various pavement and gravel layers are as follows:

Surface Course – hot mix asphalt	0.44
Base Course – hot mix asphalt	0.34
Sub-Base – crushed rock	0.14
Sub-Base – gravel	0.11

City of Ferndale Standard

The referenced City of Ferndale Road Section, Detail R-1, consists of 4 inches of Class B asphalt over 2 inches of CSTC over 14 inches gravel ballast. The referenced City Street Detail R-1 would correspond to a total structural number of 3.58.

Main Street - Existing Conditions

Calculating the average of the first six explorations (RC-1 through RC-6) within the existing Main Street Road section, we observed an average of 4.9 inches of asphalt over an average of 1.75 inches of crushed rock over an average of 7.6 inches of gravel sub-base. Accordingly, the existing road section average would correspond to a total structural number of 3.25 for the section of road represented by road cores RC-1 through RC-6.

Road cores RC-7 and RC-8 were not included in the above calculation as they contained 7 inches of asphalt over concrete, which corresponds to a total structural number of approximately 5.72 for the section of road represented by road cores RC-7 and RC-8. Road Cores RC-7 and RC-8 included a minimum of 6 inches of concrete pavement and assumed a structural coefficient similar to hot mix asphalt for the concrete pavement layer.

In summary, the existing road section is slightly below the referenced city standard without including the underlying concrete pavement and far exceeds the city standard if a minimum of 6 inches of concrete pavement is included in the calculation.

LIMITATIONS

The conclusions provided in this report are based on conditions encountered at the time of the subsurface exploration performed by GeoTest Services, Inc., information from previous studies, our experience and judgment. Our work has been performed in a manner consistent with that level of care and skill ordinarily exercised by members of the profession currently practicing under similar conditions in this area for the exclusive use

of Reichhardt and Ebe Engineering Inc. and their representatives. No warranty, expressed or implied, is made.

We presume the subsurface conditions encountered are representative of the subject site for the purposes of formulating our recommendations. However, you should be aware that subsurface conditions may vary with time and between exploratory locations, and unanticipated conditions may be encountered. If construction reveals differing conditions or the design is modified, we should be retained to reevaluate our recommendations and provide written confirmation or modification, as needed.

We appreciate the opportunity to be of service to you on this project. If any questions should arise regarding this report, please contact the undersigned.

Respectfully Submitted,
GeoTest Services, Inc.

Danny Goger E.I.T.
Staff Engineer

Dan Sorenson, L.E.G.
Engineering Geologist

Attachments: Figure 1 Site and Exploration Plan

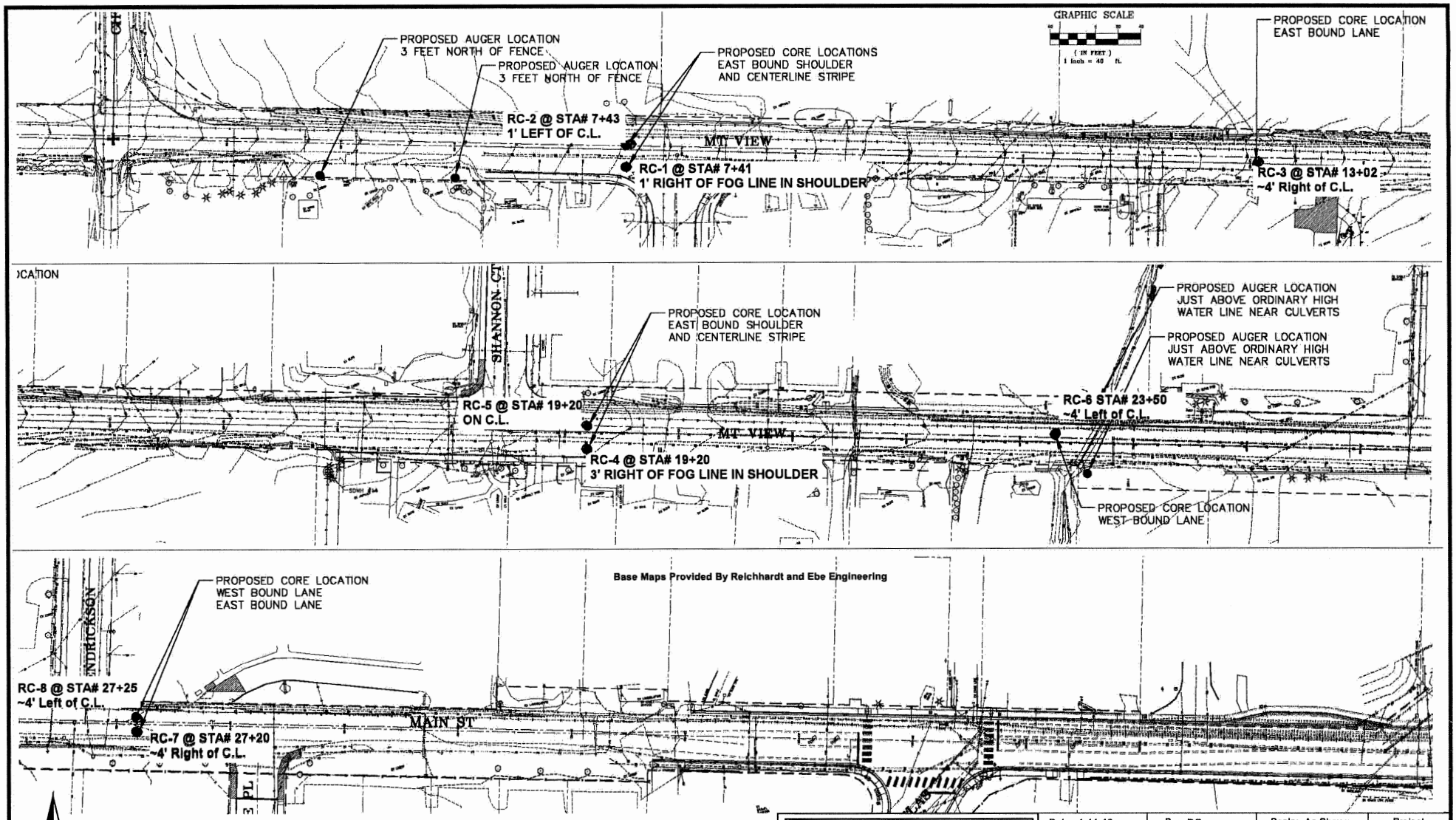

RC-# - APPROXIMATE ROAD CORE LOCATION

GEOTEST SERVICES, INC.
741 Marine Drive
Bellingham, WA 98225
phone: (360) 733-7318
fax: (360) 733-7418

Date 1-11-12	By: DG	Scale: As Shown	Project
			11-0613

SITE AND EXPLORATION PLAN
PROPOSED MAIN STREET IMPROVEMENTS - PHASE 2B
MAIN STREET
FERNDALE, WASHINGTON

FIGURE
1

APPENDIX C
TRAFFIC CONTROL PLAN – SERIES K WSDOT STANDARD PLANS

(This Page Intentionally Left Blank)

DRAWN BY: ELENA BRUNSTEIN

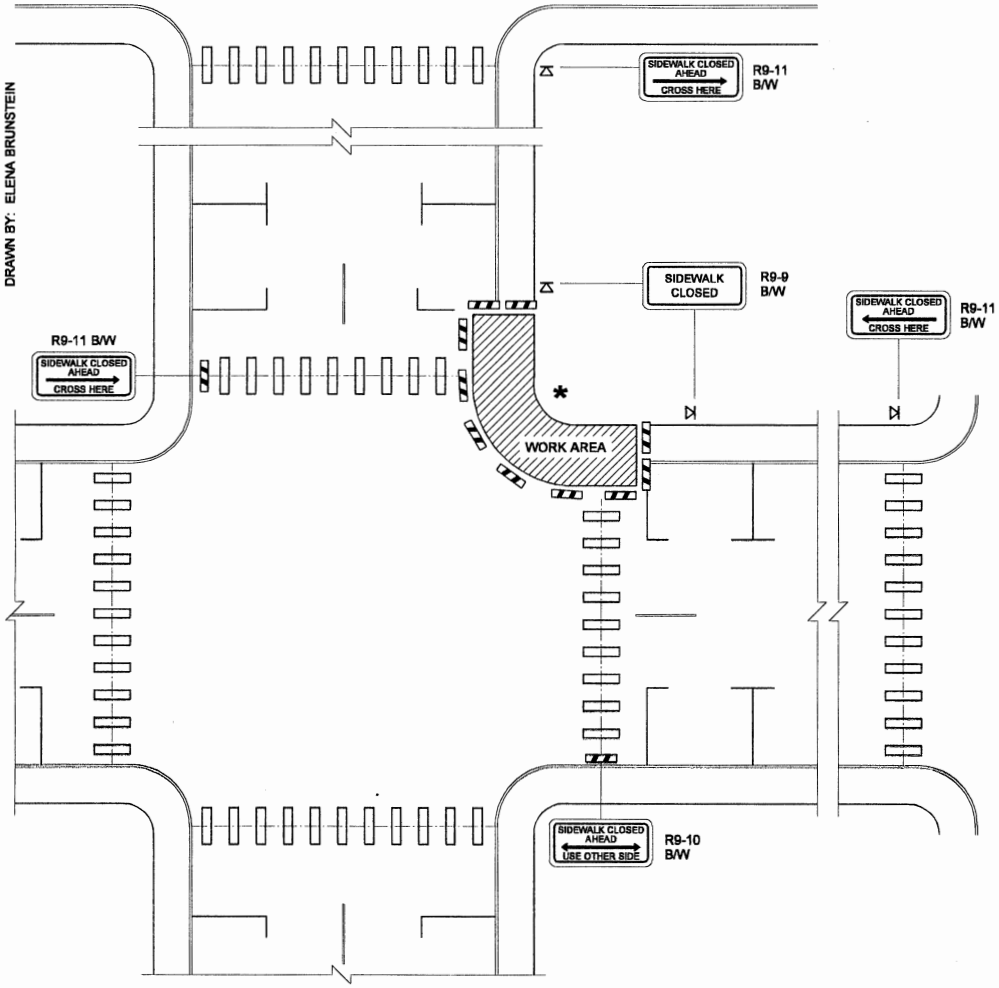

PEDESTRIAN DETOUR
WORKING HOURS

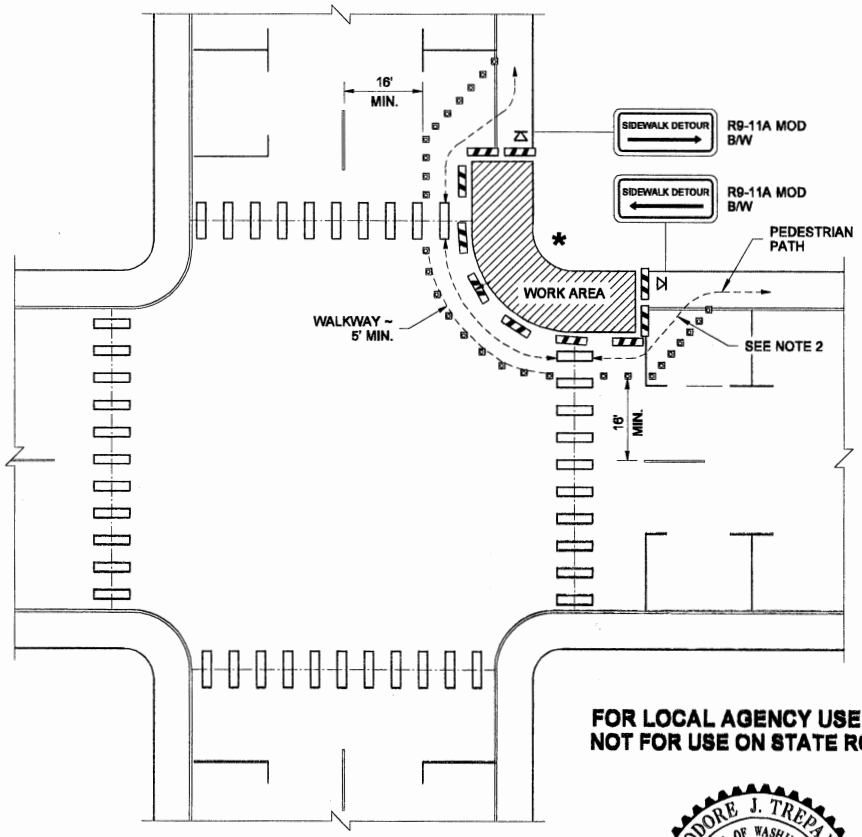

PEDESTRIAN DETOUR
NON-WORKING HOURS

FOR LOCAL AGENCY USE ONLY
NOT FOR USE ON STATE ROUTES

LEGEND

- SIGN LOCATION
- CHANNELIZING DEVICES
- TYPE 2 BARRICADE

* R8-3 B/W — NO PARKING

Install on Type 2 Barricades throughout the work area 24 hours prior to implementing traffic control. Prior notification of Local Law Enforcement required.

NOTES

1. When crosswalks or other pedestrian facilities are closed or relocated, temporary facilities shall be detectable and shall include accessibility features consistent with the features present in the existing pedestrian facility.
2. Controls shown are for pedestrian traffic only.
3. Use Warning Lights on barricades.
4. Maintain a minimum width of 3 feet for pedestrian path.
5. For signs size refer to Manual on Uniform Traffic Control Devices (MUTCD) and WSDOT Sign Fabrication Manual M55-05.

THEODORE J. TREPANIER
STATE OF WASHINGTON
25335
REGISTERED
PROFESSIONAL ENGINEER
EXPIRES AUGUST 9, 2007

NOTE: THIS PLAN IS NOT A LEGAL ENGINEERING DOCUMENT UNLESS IT CONTAINS THE ENGINEER'S SEAL AND SIGNATURE. THE ORIGINAL SEALED AND APPROVED FOR PUBLICATION, IS KEPT ON FILE AT THE WASHINGTON STATE DEPARTMENT OF TRANSPORTATION. A COPY MAY BE OBTAINED UPON REQUEST.

INTERSECTION ~ PEDESTRIAN DETOUR

STANDARD PLAN K-34.20-00

SHEET 1 OF 1 SHEET

APPROVED FOR PUBLICATION

Ken L. Smith — STATE DESIGN ENGINEER
02-15-07 — DATE

Washington State Department of Transportation

DRAWN BY: ELENA BRUNSTEIN

SIGN SPACING = X (1)		
RURAL ROADS	45 / 55 MPH	500' ±
RURAL ROADS & URBAN ARTERIALS	35 / 40 MPH	350' ±
RURAL ROADS, URBAN ARTERIALS, RESIDENTIAL & BUSINESS DISTRICTS	25 / 30 MPH	200' ± (2)
URBAN STREETS	25 MPH OR LESS	100' ± (2)
ALL SIGNS ARE BLACK ON ORANGE UNLESS DESIGNATED OTHERWISE		

(1) ALL SIGN SPACING MAY BE ADJUSTED TO ACCOMMODATE AT-GRADE INTERSECTIONS AND DRIVEWAYS.

(2) THIS SIGN SPACING MAY BE REDUCED IN URBAN AREAS TO FIT ROADWAY CONDITIONS.

NOTES

1. The sign shown is not required in the following cases: the work space is behind a barrier, or more than 2' behind the curb, or more than 15' from the edge of a roadway.
2. For sign size, refer to Manual on Uniform Traffic Control Devices (MUTCD) and WSDOT Sign Fabrication Manual M55-05.

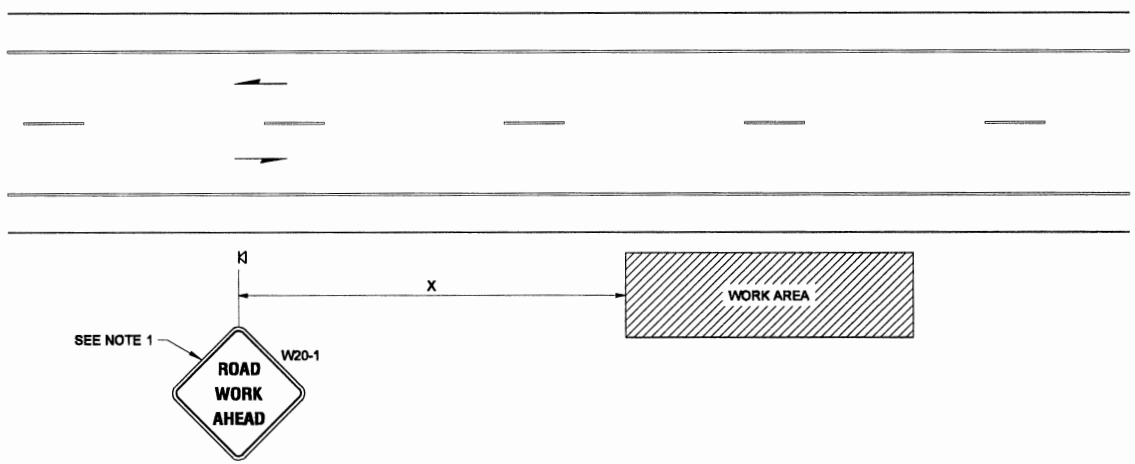

LEGEND

SIGN LOCATION

FOR LOCAL AGENCY USE ONLY
NOT FOR USE ON STATE ROUTES

THEODORE J. TREPANIER
STATE OF WASHINGTON
25335
REGISTERED
PROFESSIONAL ENGINEER

EXPIRES AUGUST 9, 2007

NOTE: THIS PLAN IS NOT A LEGAL ENGINEERING DOCUMENT BUT AN ELECTRONIC DUPLICATE. THE ORIGINAL, OWNED BY THE WASHINGTON STATE DEPARTMENT OF TRANSPORTATION, IS KEPT ON FILE AT THE WASHINGTON STATE DEPARTMENT OF TRANSPORTATION. A COPY MAY BE OBTAINED UPON REQUEST.

WORK BEYOND THE SHOULDER

STANDARD PLAN K-40.80-00

SHEET 1 OF 1 SHEET

APPROVED FOR PUBLICATION

Ken L. Smith — STATE DESIGN ENGINEER
02-15-07 — DATE

Washington State Department of Transportation

DRAWN BY: ELENA BRUNSTEIN

SIGN SPACING = X (1)		
RURAL HIGHWAYS	60 / 65 MPH	800' ±
RURAL ROADS	45 / 55 MPH	500' ±
RURAL ROADS & URBAN ARTERIALS	35 / 40 MPH	350' ±
RURAL ROADS, URBAN ARTERIALS, RESIDENTIAL & BUSINESS DISTRICTS	25 / 30 MPH	200' ± (2)
URBAN STREETS	25 MPH OR LESS	100' ± (2)
ALL SIGNS ARE BLACK ON ORANGE UNLESS DESIGNATED OTHERWISE		

(1) ALL SIGN SPACING MAY BE ADJUSTED TO ACCOMMODATE INTERCHANGE RAMPS, AT-GRADE INTERSECTIONS, AND DRIVEWAYS.

(2) THIS SIGN SPACING MAY BE REDUCED IN URBAN AREAS TO FIT ROADWAY CONDITIONS.

CHANNELIZING DEVICE SPACING		
POSTED SPEED (MPH)	IN TAPER (FEET)	IN TANGENT (FEET)
50 / 70	40	80
35 / 45	30	60
25 / 30	20	40

NOTES

1. See Standard Plan K-24.60 for typical lane closure signing details, device spacing requirements, and lane closure taper length.
2. MOTOCYCLES USE EXTREME CAUTION signs shall be installed when the following roadway conditions exist:
   - grooved pavement
   - abrupt lane edge
   - steel plates
   - loose gravel of earth

   Specific signs for each of the conditions noted shall be installed along with MOTORCYCLES USE EXTREME CAUTION signs.
3. For signs size refer to Manual on Uniform Traffic Control Devices (MUTCD) and WSDOT Sign Fabrication Manual M55-05.

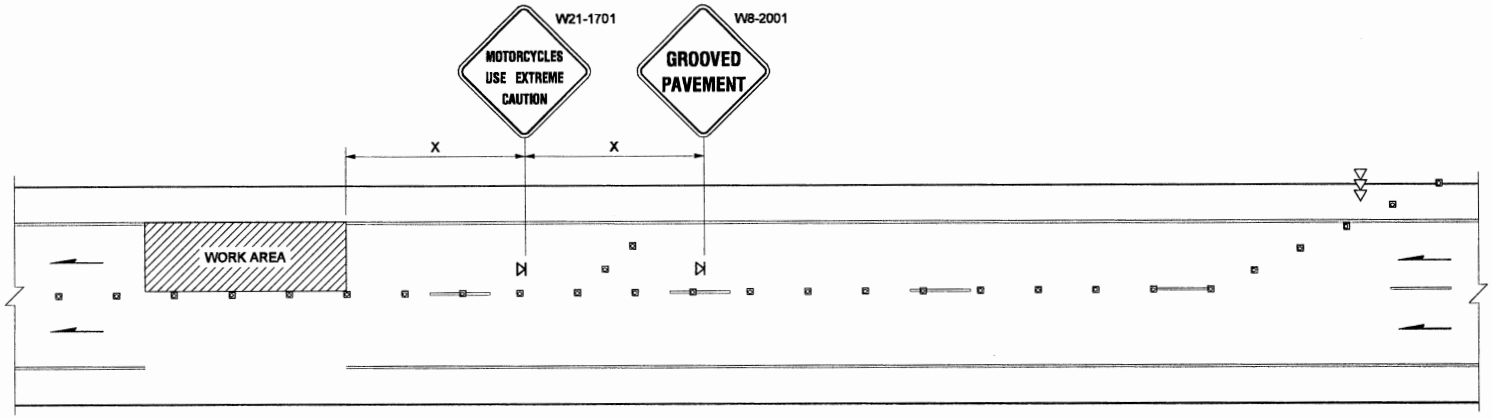

MOTORCYCLE WARNING SIGN (W21-1701) SHOULD BE INSTALLED AT 1 MILE SPACING, THROUGHOUT THE WORK ZONE WHERE THE CONDITION EXISTS, AS PART OF THE SEQUENCE OF OTHER APPROPRIATE STANDARD WARNING SIGNS ON 1 MILE SPACING

LEGEND

- SIGN LOCATION
- CHANNELIZING DEVICES
- ARROW PANEL

FOR LOCAL AGENCY USE ONLY
NOT FOR USE ON STATE ROUTES

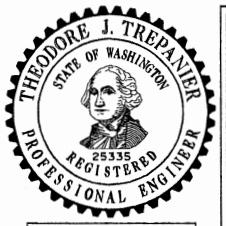

EXPIRES AUGUST 9, 2007

NOTE: THIS PLAN IS NOT A LEGAL ENGINEERING DOCUMENT BUT AN ELECTRONIC DUPLICATE. THE ORIGINAL, SIGNED BY THE APPROPRIATE AUTHORITY, IS THE LEGAL DOCUMENT ON FILE AT THE WASHINGTON STATE DEPARTMENT OF TRANSPORTATION. A COPY MAY BE OBTAINED UPON REQUEST.

MOTORCYCLE SUPPLEMENTAL SIGNING

STANDARD PLAN K-60.40-00

SHEET 1 OF 1 SHEET

APPROVED FOR PUBLICATION

Ken L. Smith — STATE DESIGN ENGINEER
02-15-07 — DATE

Washington State Department of Transportation

DRAWN BY: FERN LIDDELL

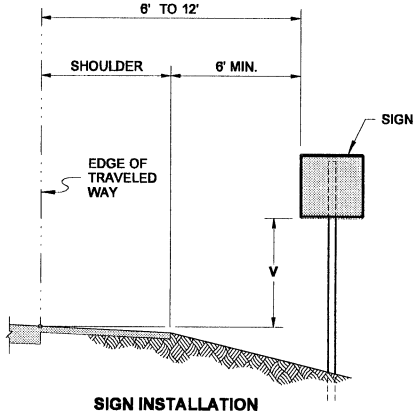

SIGN INSTALLATION (FILL SECTION)

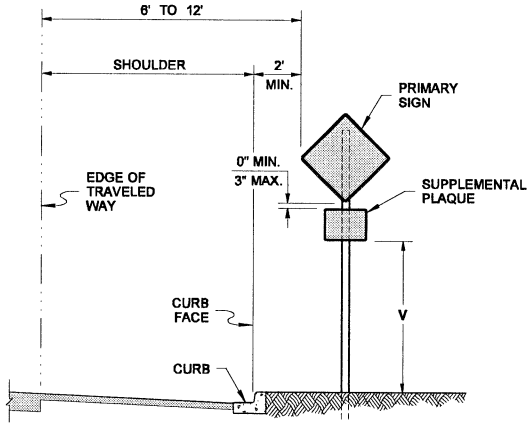

SIGN INSTALLATION (CURB SECTION)

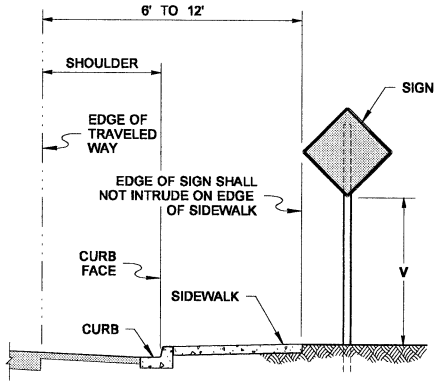

SIGN INSTALLATION (SIDEWALK AND CURB SECTION)

NOTES

1. For sign installation details, see Std. Plan G - series.
2. In rural areas, the "V" Height can be a minimum of 7 feet for primary signs and 6 feet for the supplemental plaques for greater visibility, as directed by the engineer.
3. The "V" height for signs, with an area of more than 50 square feet and two or more sign supports, is 7 feet in both rural and urban areas.

HEIGHT V		
	TO BOTTOM OF SIGN (NO SUPPLEMENTAL PLAQUE)	TO BOTTOM OF SUPPLEMENTAL PLAQUE (WHEN REQUIRED)
RURAL	5' MINIMUM	4' MINIMUM
URBAN	7' MINIMUM	6' MINIMUM

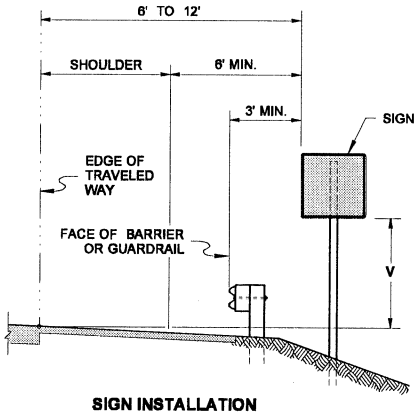

SIGN INSTALLATION (BEHIND TRAFFIC BARRIER)

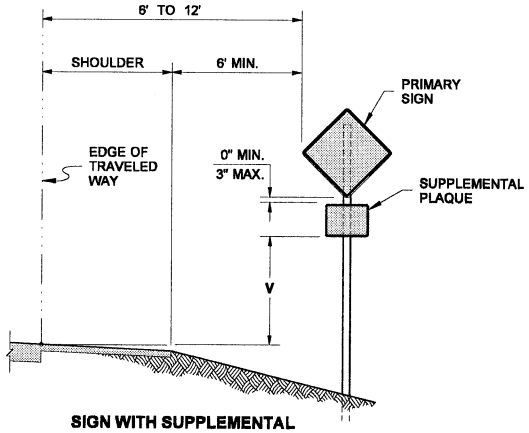

SIGN WITH SUPPLEMENTAL PLAQUE INSTALLATION (FILL SECTION)

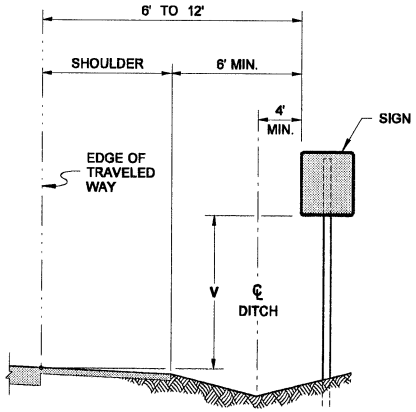

SIGN INSTALLATION (DITCH SECTION)

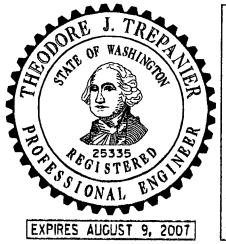

NOTE: THIS PLAN IS NOT A LEGAL ENGINEERING DOCUMENT UNLESS IT BEARS THE ORIGINAL WET SEAL AND SIGNATURE OF THE ENGINEER AND APPROVED FOR PUBLICATION. IS KEPT ON FILE AT THE WASHINGTON STATE DEPARTMENT OF TRANSPORTATION. A COPY MAY BE OBTAINED UPON REQUEST.

CLASS A CONSTRUCTION SIGNING INSTALLATION

STANDARD PLAN K-80.10-00

SHEET 1 OF 1 SHEET

APPROVED FOR PUBLICATION

Ken L. Smith — STATE DESIGN ENGINEER

02-21-07 — DATE

Washington State Department of Transportation

APPENDIX D
CITY OF FERNDALE STANDARD PLANS
(This Page Intentionally Left Blank)

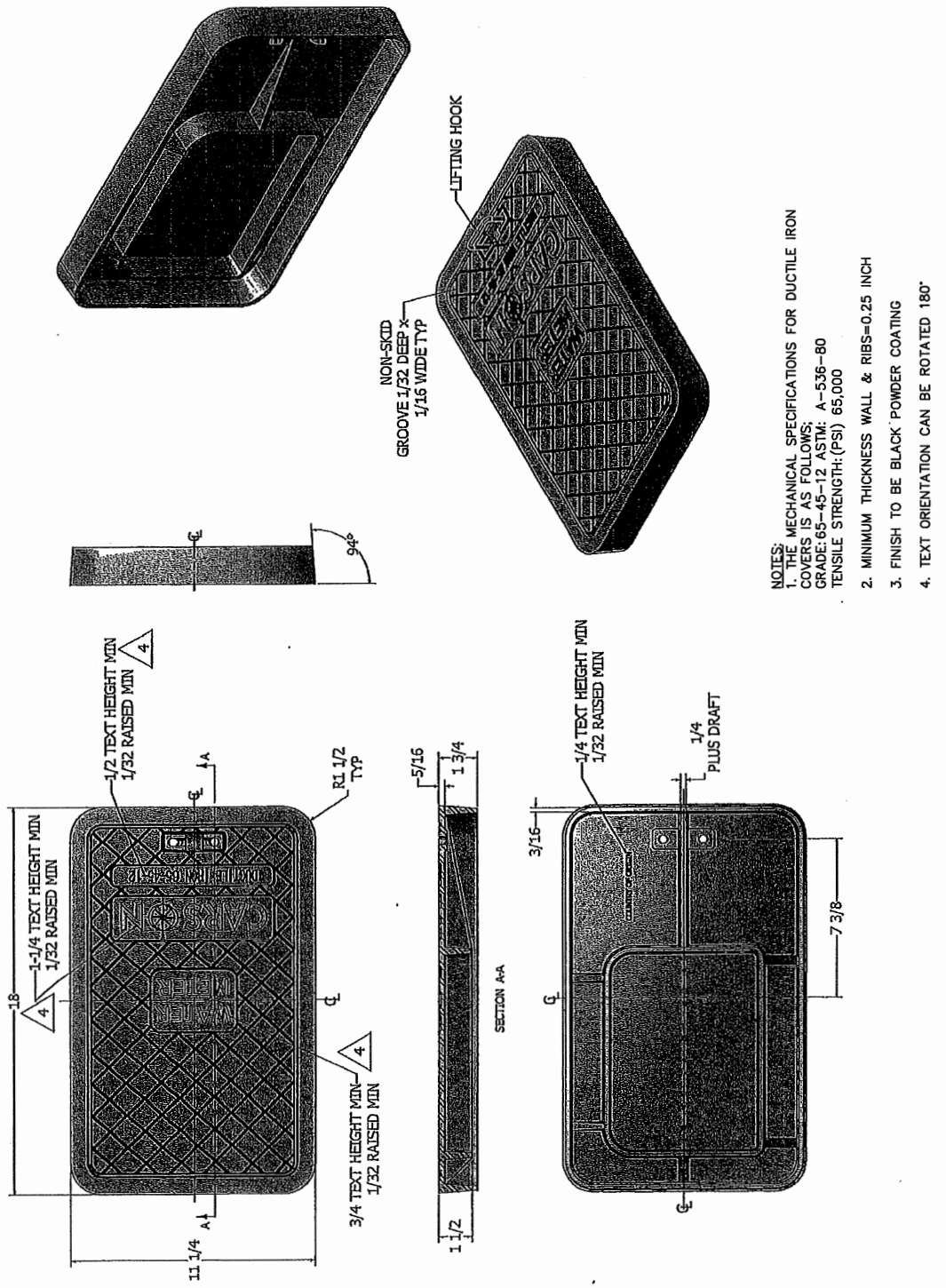

NOTES:
1. THE MECHANICAL SPECIFICATIONS FOR DUCTILE IRON COVERS IS AS FOLLOWS;
GRADE:65-45-12 ASTM: A-536-80
TENSILE STRENGTH:(PSI) 65,000
2. MINIMUM THICKNESS WALL & RIBS=0.25 INCH
3. FINISH TO BE BLACK POWDER COATING
4. TEXT ORIENTATION CAN BE ROTATED 180°

NTS

APPROVED

Public Works Director Date

CITY OF FERNDALE
3/4" WATER METER
LOCATED IN SIDEWALK

DRAWING
W-6.1.1

R&E
REICHHARDT & EBE
ENGINEERING, INC.
423 Front St, Ste 201 Lynden, WA 98264
Phone 360-354-3687 FAX 360-354-0407

MAIN STREET IMPROVEMENTS
(DOUGLAS TO CHURCH)

3-27-12

08018.1 P2B-DET

P:\Projects\08018\dwg\Phase 2B\P2B-DET.dwg, DET, 3/27/2012 10:06:19 AM

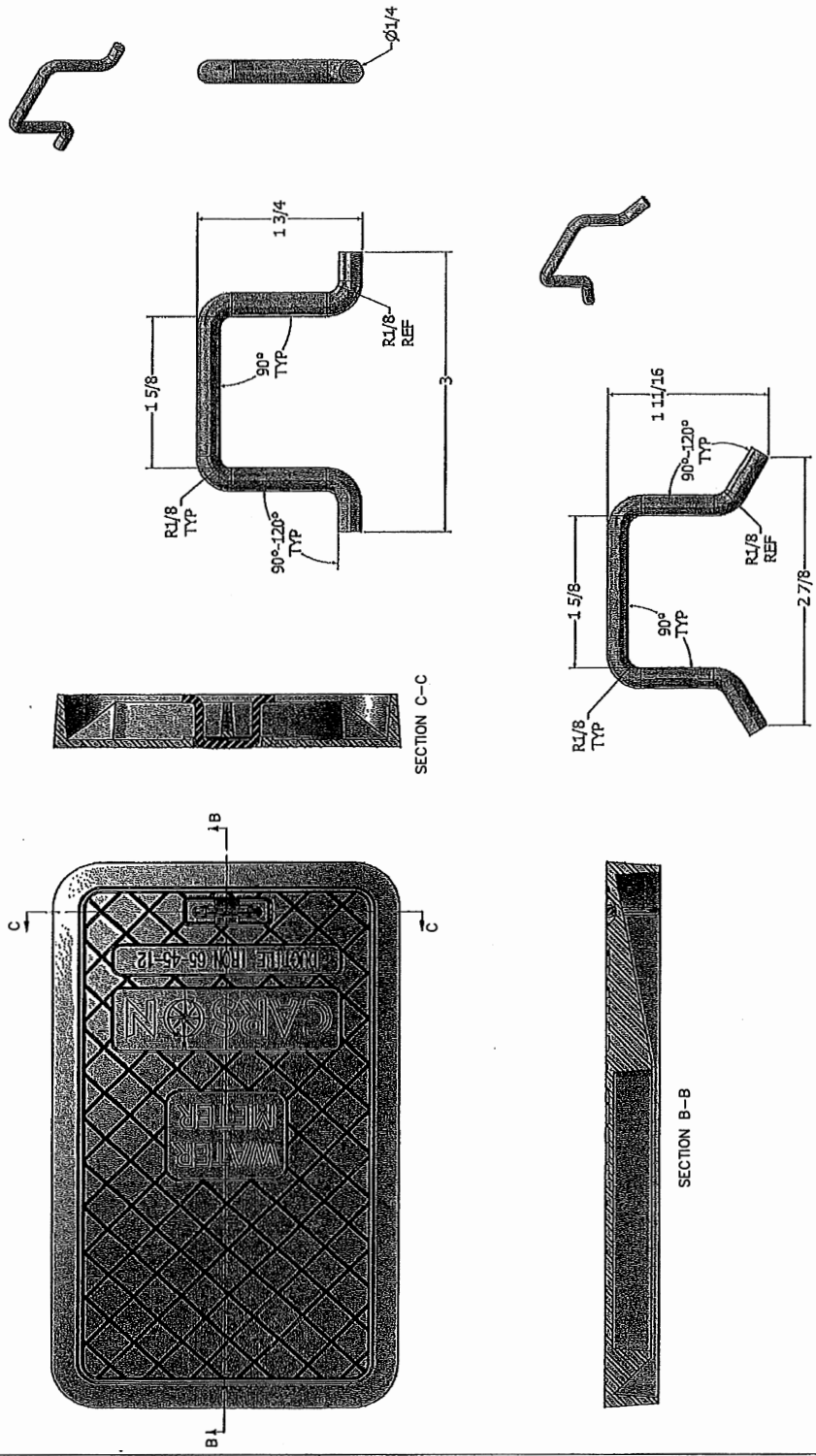

NTS

APPROVED	CITY OF FERNDALE 3/4" WATER METER LOCATED IN SIDEWALK	DRAWING W-6.1.2
Public Works Director ____ Date ____		

R&E REICHHARDT & EBE ENGINEERING, INC.
423 Front St, Ste 201 Lynden, WA 98264
Phone 360-354-3687 FAX 360-354-0407

MAIN STREET IMPROVEMENTS
(DOUGLAS TO CHURCH)

3-27-12

08018.1 P2B-DET

P:\Projects\08018\dwg\Phase 2B\P2B-DET.dwg, DET, 3/27/2012 10:07:32 AM

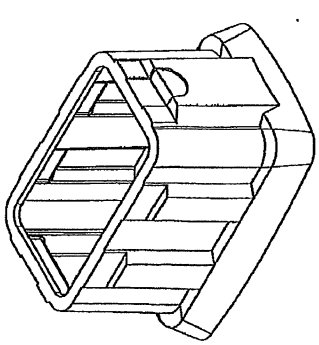

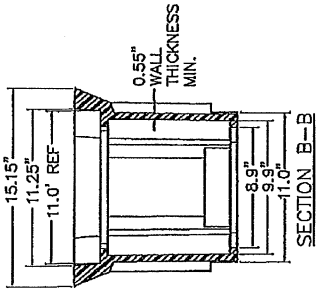

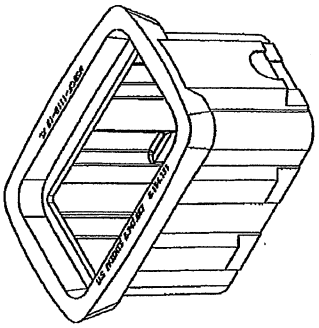

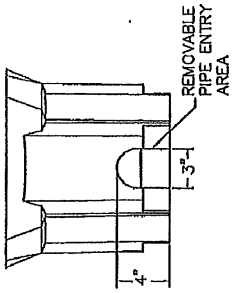

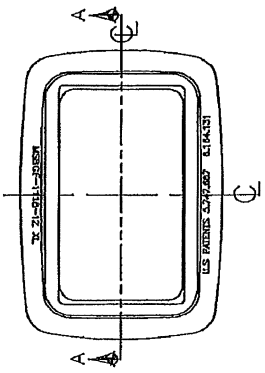

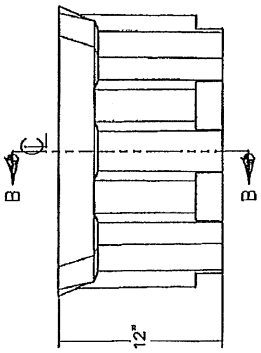

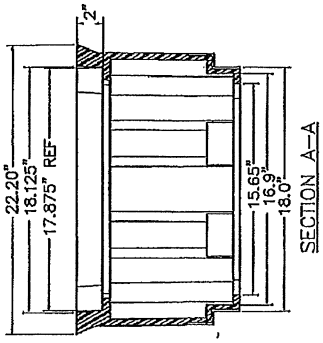

NTS

APPROVED	CITY OF FERNDALE 3/4" WATER METER LOCATED IN SIDEWALK	DRAWING W–6.1.3
Public Works Director ____ Date ____		

REICHHARDT & EBE
ENGINEERING, INC.
423 Front St, Ste 201 Lynden, WA 98264
Phone 360–354–3687 FAX 360–354–0407

MAIN STREET IMPROVEMENTS (DOUGLAS TO CHURCH)

3–27–12

08018.1 P2B–DET

P:\Projects\08018\dwg\Phase 2B\P2B-DET.dwg, DET, 3/27/2012 10:06:27 AM

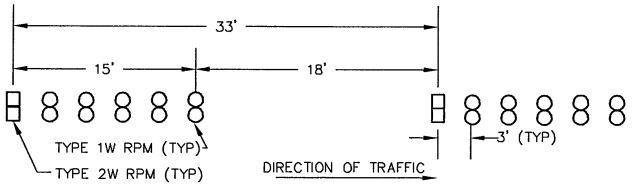

SKIP GORE STRIPE DETAIL

NTS RAISED PAVEMENT MARKER SUBSTITUTION PER CITY OF FERNDALE

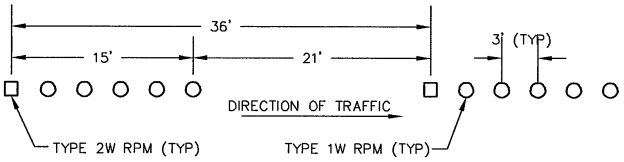

LANE STRIPE DETAIL

NTS RAISED PAVEMENT MARKER SUBSTITUTION PER CITY OF FERNDALE

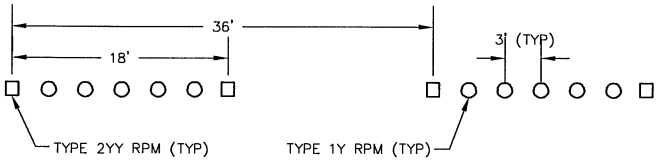

SKIP CENTER STRIPE DETAIL

NTS RAISED PAVEMENT MARKER SUBSTITUTION PER CITY OF FERNDALE

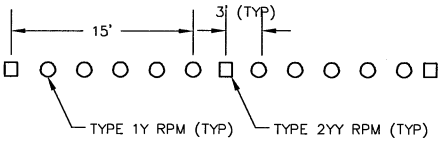

NO PASS STRIPE

NTS RAISED PAVEMENT MARKER SUBSTITUTION PER CITY OF FERNDALE

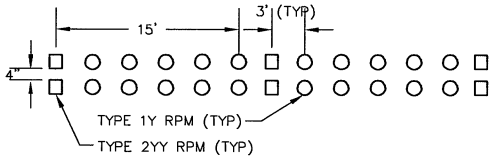

DOUBLE YELLOW STRIPE DETAIL

NTS RAISED PAVEMENT MARKER SUBSTITUTION PER CITY OF FERNDALE

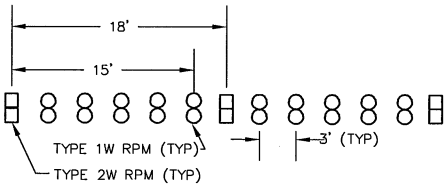

GORE STRIPE DETAIL

NTS RAISED PAVEMENT MARKER SUBSTITUTION PER CITY OF FERNDALE

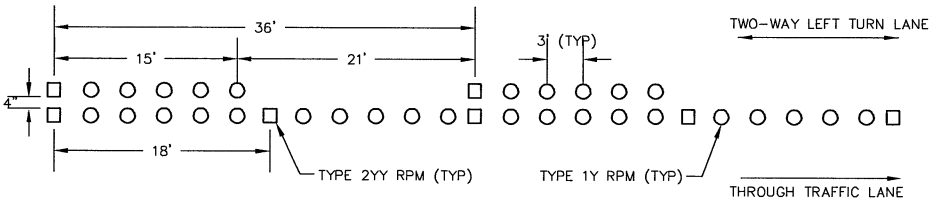

TWO-WAY LEFT TURN STRIPE DETAIL

NTS RAISED PAVEMENT MARKER SUBSTITUTION PER CITY OF FERNDALE

R&E
REICHHARDT & EBE
ENGINEERING, INC.
423 Front St, Ste 201 Lynden, WA 98264
Phone 360-354-3687 FAX 360-354-0407

MAIN STREET IMPROVEMENTS
(DOUGLAS TO CHURCH)

3-27-12

08018.1 P2B-DET

P:\Projects\08018\dwg\Phase 2B\P2B-DET.dwg, DET, 3/27/2012 10:06:38 AM

APPENDIX E
WSDOT STANDARD PLANS
(This Page Intentionally Left Blank)

DRAWN BY: LISA CYFORD

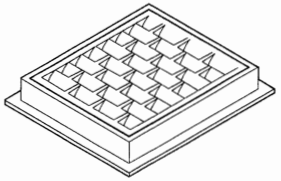

FRAME AND VANED GRATE

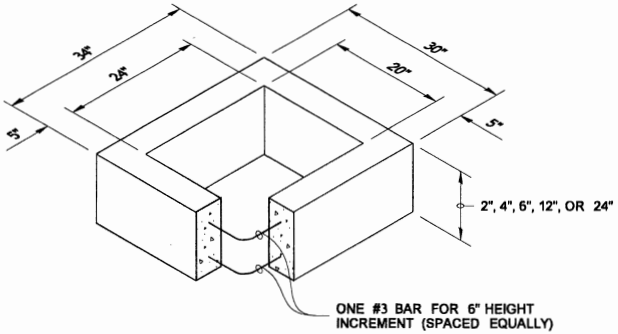

RECTANGULAR ADJUSTMENT SECTION

PIPE ALLOWANCES	
PIPE MATERIAL	MAXIMUM INSIDE DIAMETER
REINFORCED OR PLAIN CONCRETE	12"
ALL METAL PIPE	15"
CPSSP * (STD. SPEC. 9-05.20)	12"
SOLID WALL PVC (STD. SPEC. 9-05.12(1))	15"
PROFILE WALL PVC (STD. SPEC. 9-05.12(2))	15"

* CORRUGATED POLYETHYLENE STORM SEWER PIPE

NOTES

1. As acceptable alternatives to the rebar shown in the PRECAST BASE SECTION, fibers (placed according to the Standard Specifications), or wire mesh having a minimum area of 0.12 square inches per foot shall be used with the minimum required rebar shown in the ALTERNATIVE PRECAST BASE SECTION. Wire mesh shall not be placed in the knockouts.
2. The knockout diameter shall not be greater than 20". Knockouts shall have a wall thickness of 2" minimum to 2.5" maximum. Provide a 1.5" minimum gap between the knockout wall and the outside of the pipe. After the pipe is installed, fill the gap with joint mortar in accordance with Standard Specification 9-04.3.
3. The maximum depth from the finished grade to the lowest pipe invert shall be 5'.
4. The frame and grate may be installed with the flange down, or integrally cast into the adjustment section with flange up.
5. The Precast Base Section may have a rounded floor, and the walls may be sloped at a rate of 1:24 or steeper.
6. The opening shall be measured at the top of the Precast Base Section.
7. All pickup holes shall be grouted full after the basin has been placed.

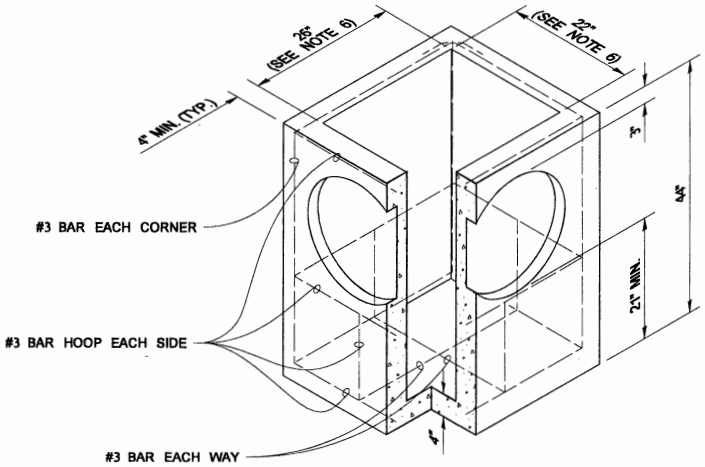

PRECAST BASE SECTION

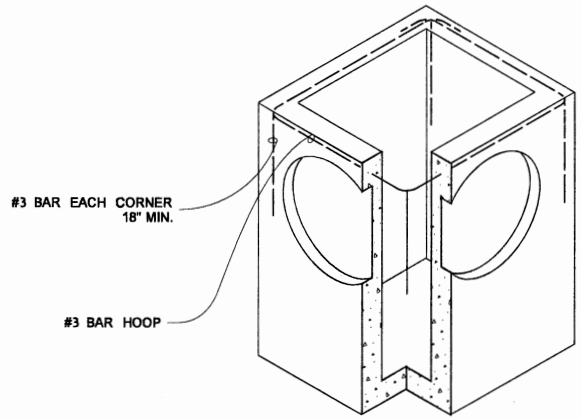

(SEE NOTE 1)

ALTERNATIVE PRECAST BASE SECTION

NOTE: THIS PLAN IS NOT A LEGAL ENGINEERING DOCUMENT. IT HAS BEEN PREPARED BY THE WASHINGTON STATE DOT. THE ENGINEER AND APPROVED FOR PUBLICATION IS KEPT ON FILE AT THE WASHINGTON STATE DEPARTMENT OF TRANSPORTATION. A COPY MAY BE OBTAINED UPON REQUEST.

CATCH BASIN TYPE 1

STANDARD PLAN B-5.20-01

SHEET 1 OF 1 SHEET

APPROVED FOR PUBLICATION

Pasco Bakotich III — 06-16-11

STATE DESIGN ENGINEER — DATE

Washington State Department of Transportation

DRAWN BY: LISA CYFORD

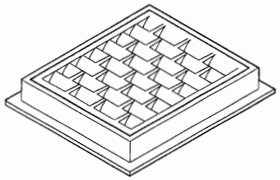

FRAME AND VANED GRATE

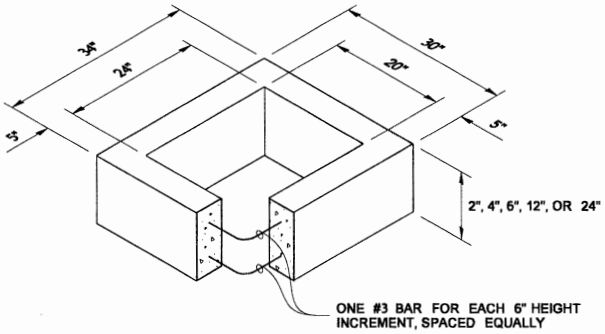

RECTANGULAR ADJUSTMENT SECTION

PIPE ALLOWANCES	
PIPE MATERIAL	MAXIMUM INSIDE DIAMETER
REINFORCED OR PLAIN CONCRETE	18"
ALL METAL PIPE	21"
CPSSP * (STD. SPEC. 9-05.20)	18"
SOLID WALL PVC (STD. SPEC. 9-05.12(1))	21"
PROFILE WALL PVC (STD. SPEC. 9-05.12(2))	21"

* CORRUGATED POLYETHYLENE STORM SEWER PIPE

NOTES

1. As acceptable alternatives to the rebar shown in the **PRECAST BASE SECTION**, fibers (placed according to the Standard Specifications), or wire mesh having a minimum area of 0.12 square inches per foot, shall be used with the minimum required rebar shown in the ALTERNATIVE **PRECAST BASE SECTION.** Wire mesh shall not be placed in the knockouts.
2. The knockout shall not be greater than 26", in any direction. Knockouts shall have a wall thickness of 2" minimum to 2.5" maximum. Provide a 1.5" minimum gap between the knockout wall and the outside of the pipe. After the pipe is installed, fill the gap with joint mortar in accordance with **Standard Specification 9-04.3.**
3. The maximum depth from the finished grade to the lowest pipe invert shall be 5'.
4. The frame and grate may be installed with the flange down or integrally cast into the adjustment section with flange up.
5. The Precast Base Section may have a rounded floor, and the walls may be sloped at a rate of 1:24 or steeper.
6. The opening shall be measured at the top of the Precast Base Section.
7. All pickup holes shall be grouted full after the basin has been placed.

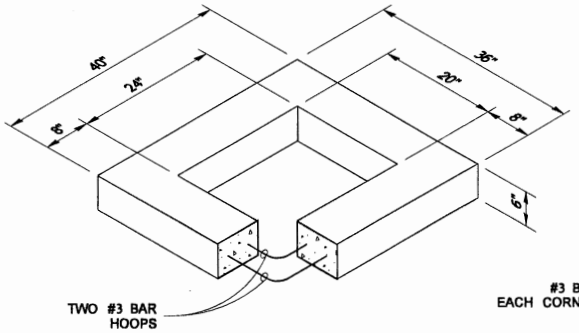

REDUCING SECTION

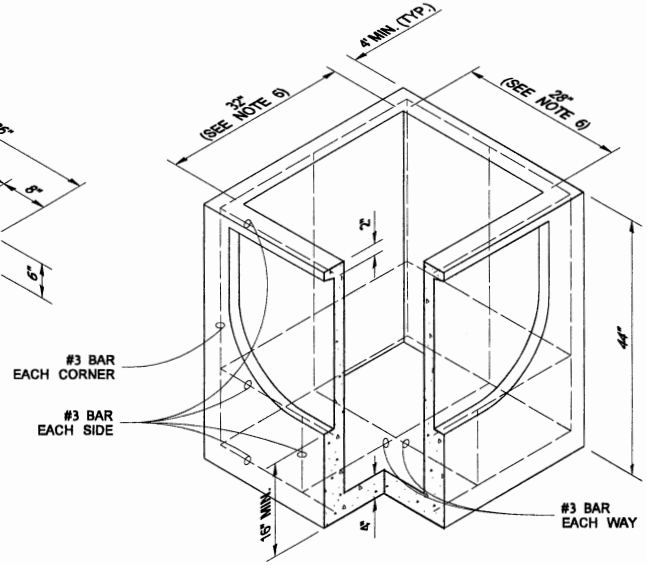

PRECAST BASE SECTION

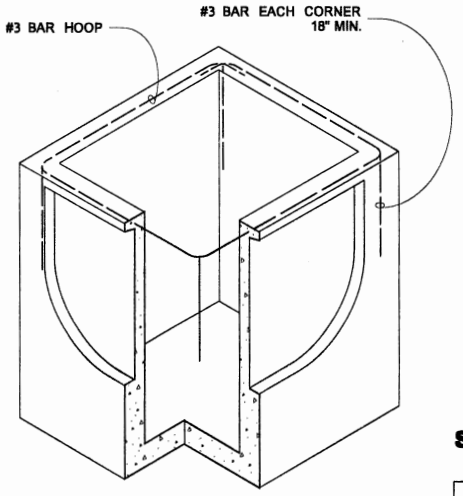

(SEE NOTE 1)

ALTERNATIVE PRECAST BASE SECTION

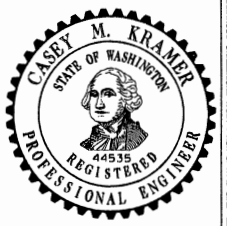

NOTE: THIS PLAN IS NOT A LEGAL ENGINEERING DOCUMENT THAT IS SUITABLE FOR ANY PURPOSE. THE ENGINEER'S SEAL AT THE TOP IS ONLY VALID FOR THE VERSION OF THE DOCUMENT ON FILE AT THE WASHINGTON STATE DEPARTMENT OF TRANSPORTATION. A COPY MAY BE OBTAINED UPON REQUEST.

CATCH BASIN TYPE 1L

STANDARD PLAN B-5.40-01

SHEET 1 OF 1 SHEET

APPROVED FOR PUBLICATION

Pasco Bakotich III — 06-16-11

STATE DESIGN ENGINEER — DATE

Washington State Department of Transportation

DRAWN BY: ADAM COCHRAN

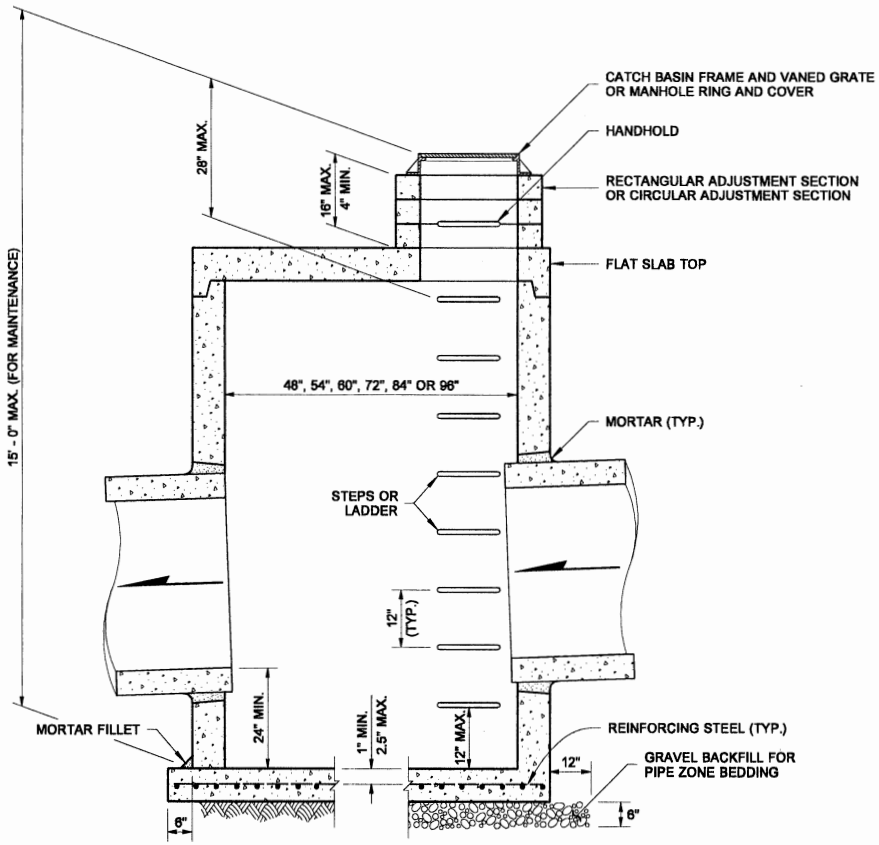

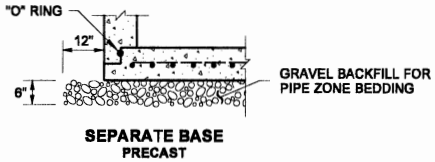

NOTES

1. No steps are required when height is 4' or less.
2. The bottom of the precast catch basin may be sloped to facilitate cleaning.
3. The rectangular frame and grate may be installed with the flange up or down. The frame may be cast into the adjustment section.
4. Knockouts shall have a wall thickness of 2" minimum to 2.5" maximum. Provide a 1.5" minimum gap between the knockout wall and the outside of the pipe. After the pipe is installed, fill the gap with joint mortar in accordance with Standard Specification 9-04.3.

CATCH BASIN DIMENSIONS

CATCH BASIN DIAMETER	WALL THICKNESS	BASE THICKNESS	MAXIMUM KNOCKOUT SIZE	MINIMUM DISTANCE BETWEEN KNOCKOUTS	BASE REINFORCING STEEL in^2/ft. IN EACH DIRECTION	
					SEPARATE BASE	INTEGRAL BASE
48"	4"	6"	36"	8"	0.23	0.15
54"	4.5"	8"	42"	8"	0.19	0.19
60"	5"	8"	48"	8"	0.25	0.25
72"	6"	8"	60"	12"	0.35	0.24
84"	8"	12"	72"	12"	0.39	0.29
96"	8"	12"	84"	12"	0.39	0.29

PIPE ALLOWANCES

CATCH BASIN DIAMETER	PIPE MATERIAL WITH MAXIMUM INSIDE DIAMETER				
	CONCRETE	ALL METAL	CPSSP ①	SOLID WALL PVC ②	PROFILE WALL PVC ③
48"	24"	30"	24"	27"	30"
54"	30"	36"	30"	27"	36"
60"	36"	42"	36"	36"	42"
72"	42"	54"	42"	36"	48"
84"	54"	60"	54"	36"	48"
96"	60"	72"	60"	36"	48"

① Corrugated Polyethylene Storm Sewer Pipe (Std. Spec. 9-05.20)
② (Std. Spec. 9-05.12(1))
③ (Std. Spec. 9-05.12(2))

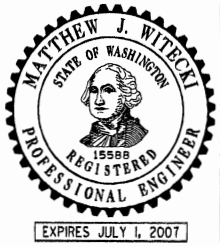

NOTE: THIS PLAN IS NOT A LEGAL ENGINEERING DOCUMENT UNLESS IT BEARS THE ORIGINAL WET SIGNATURE OF THE ENGINEER WHO THE ENGINEER AND APPROVED OR REJECTION, IS REQUIRED FILE AT THE WASHINGTON STATE DEPARTMENT OF TRANSPORTATION. A COPY MAY BE OBTAINED UPON REQUEST.

CATCH BASIN TYPE 2

STANDARD PLAN B-10.20-00

SHEET 1 OF 1 SHEET

APPROVED FOR PUBLICATION

Harold J. Peterfeso — STATE DESIGN ENGINEER — *06-01-06* — DATE

Washington State Department of Transportation

DRAWN BY: ADAM COCHRAN

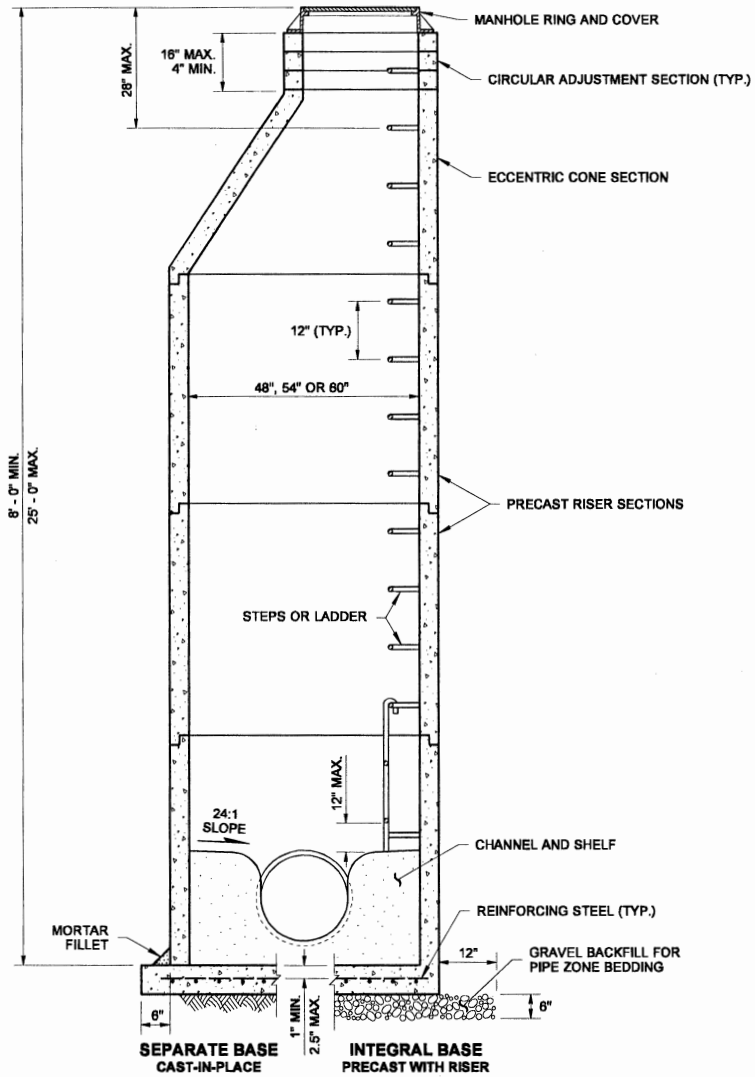

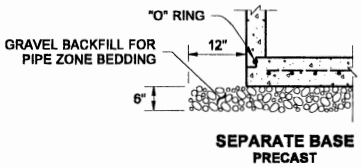

NOTE

Knockouts shall have a wall thickness of 2" minimum to 2.5" maximum.

MANHOLE DIMENSION TABLE

DIAM.	WALL THICKNESS	BASE THICKNESS	MAXIMUM KNOCKOUT SIZE	MINIMUM DISTANCE BETWEEN KNOCKOUTS	BASE REINFORCING STEEL $in^2/ft.$ IN EACH DIRECTION	
					SEPARATE BASE	INTEGRAL BASE
48"	4"	6"	36"	8"	0.23	0.15
54"	4.5"	8"	42"	8"	0.19	0.19
60"	5"	8"	48"	8"	0.25	0.25

NOTE: THIS PLAN IS NOT A LEGAL ENGINEERING DOCUMENT UNLESS IT BEARS THE ENGINEER'S SEAL AND SIGNATURE. THIS PLAN MUST BE REVIEWED AND APPROVED FOR PUBLICATION, BE NOTY ON FILE AT THE WASHINGTON STATE DEPARTMENT OF TRANSPORTATION. A COPY MAY BE OBTAINED UPON REQUEST.

MANHOLE TYPE 1

STANDARD PLAN B-15.20-00

SHEET 1 OF 1 SHEET

APPROVED FOR PUBLICATION

Harold J. Peterfeso — STATE DESIGN ENGINEER

06-01-06 — DATE

Washington State Department of Transportation

DRAWN BY: ADAM COCHRAN

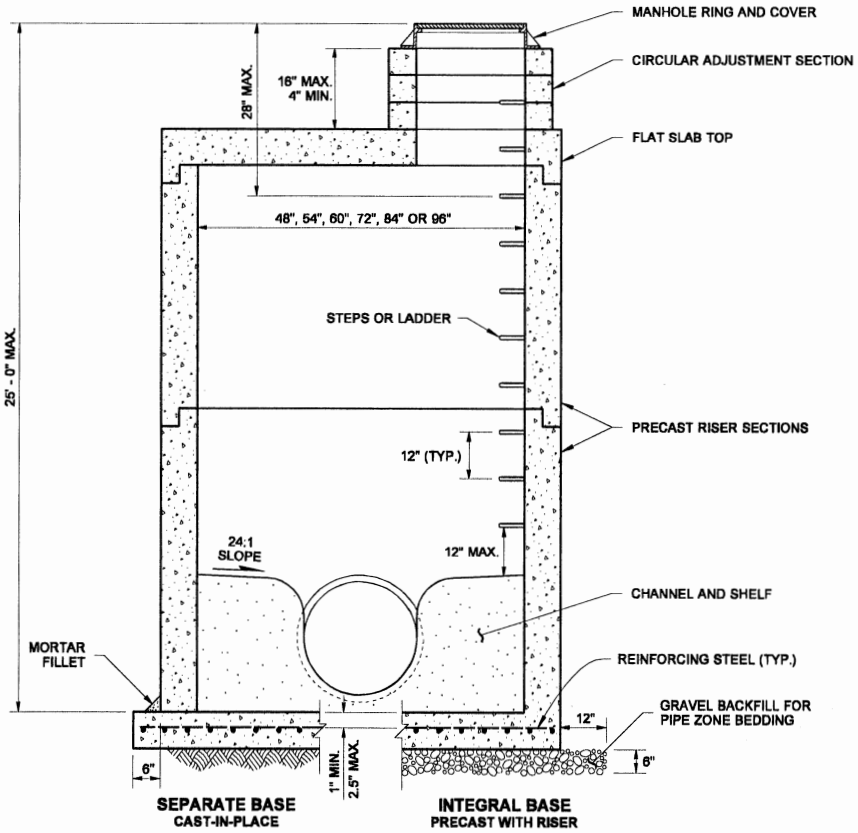

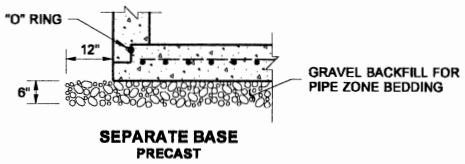

NOTE

Knockouts shall have a wall thickness of 2" minimum to 2.5" maximum.

MANHOLE DIMENSION TABLE

DIAM.	WALL THICKNESS	BASE THICKNESS	MAXIMUM KNOCKOUT SIZE	MINIMUM DISTANCE BETWEEN KNOCKOUTS	BASE REINFORCING STEEL $in^2/ft.$ IN EACH DIRECTION	
					SEPARATE BASE	INTEGRAL BASE
48"	4"	6"	36"	8"	0.23	0.15
54"	4.5"	8"	42"	8"	0.19	0.19
60"	5"	8"	48"	8"	0.25	0.25
72"	6"	8"	60"	12"	0.35	0.24
84"	8"	12"	72"	12"	0.39	0.29
96"	8"	12"	84"	12"	0.39	0.29

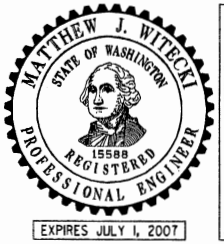

NOTE: THIS PLAN IS NOT A LEGAL ENGINEERING DOCUMENT UNLESS IT BEARS THE ENGINEER'S SEAL AND SIGNATURE. THE ORIGINAL SIGNED BY THE ENGINEER AND APPROVED FOR PUBLICATION IS KEPT ON FILE AT THE WASHINGTON STATE DEPARTMENT OF TRANSPORTATION. A COPY MAY BE OBTAINED UPON REQUEST.

MANHOLE TYPE 3

STANDARD PLAN B-15.60-00

SHEET 1 OF 1 SHEET

APPROVED FOR PUBLICATION

Harold J. Peterfeso — STATE DESIGN ENGINEER

06-01-06 — DATE

Washington State Department of Transportation

DRAWN BY: MARK SUJKA

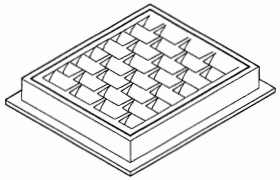

FRAME AND VANED GRATE

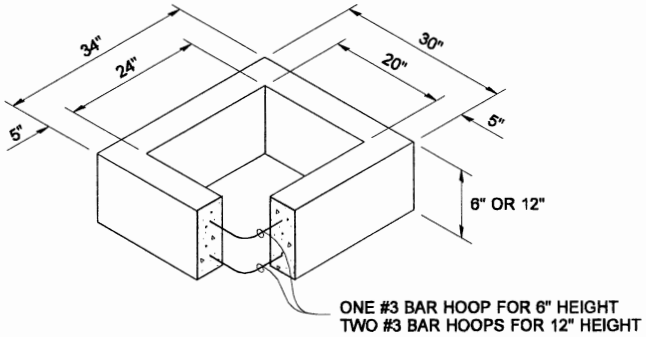

RECTANGULAR ADJUSTMENT SECTION

PIPE ALLOWANCES	
PIPE MATERIAL	MAXIMUM INSIDE DIAMETER
REINFORCED OR PLAIN CONCRETE	12"
ALL METAL PIPE	15"
CPSSP * (STD. SPEC. 9-05.20)	12"
SOLID WALL PVC (STD. SPEC. 9-05.12(1))	15"
PROFILE WALL PVC (STD. SPEC. 9-05.12(2))	15"

* CORRUGATED POLYETHYLENE STORM SEWER PIPE

NOTES

1. As acceptable alternatives to the rebar shown in the **PRECAST BASE SECTION**, fibers (placed according to the Standard Specifications), or wire mesh having a minimum area of 0.12 square inches per foot shall be used with the minimum required rebar shown in the **ALTERNATIVE PRECAST BASE SECTION**. Wire mesh shall not be placed in the knockouts.
2. The knockout diameter shall not be greater than 18". Knockouts shall have a wall thickness of 2" minimum to 2.5" maximum. Provide a 1.5" minimum gap between the knockout wall and the outside of the pipe. After the pipe is installed, fill the gap with joint mortar in accordance with Standard Specification 9-04.3.
3. The maximum depth from the finished grade to the lowest pipe invert shall be 5'.
4. The frame and grate may be installed with the flange up or down. The frame may be cast into the adjustment section.
5. The Precast Base Section may have a rounded floor, and the walls may be sloped at a rate of 1:24 or steeper.
6. The opening shall be measured at the top of the precast base section.
7. All pickup holes shall be grouted full after the inlet has been placed.

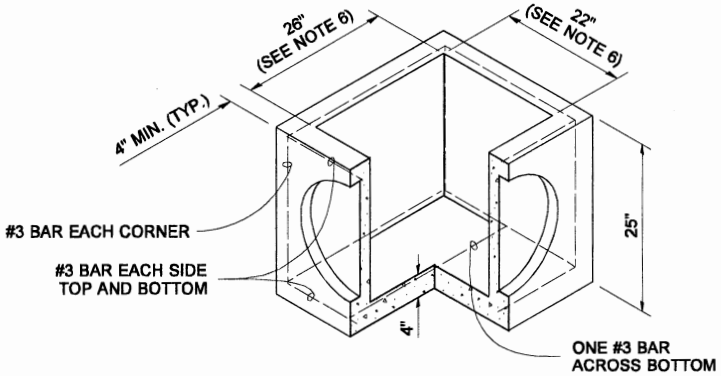

PRECAST BASE SECTION

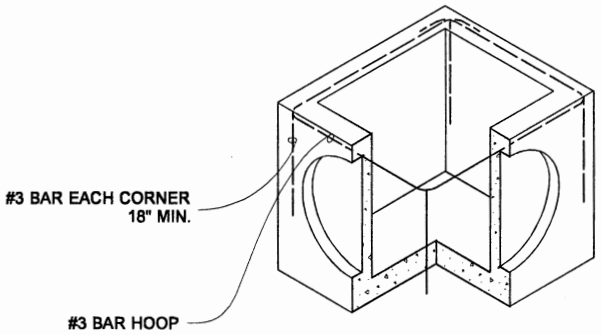

SEE NOTE 1

ALTERNATIVE PRECAST BASE SECTION

NOTE: THIS PLAN IS NOT A LEGAL ENGINEERING DOCUMENT BUT AN ELECTRONIC COPY OF THE ORIGINAL, SIGNED BY THE ENGINEER, WHICH IS KEPT IN THE ENGINEERING RECORDS FILE AT THE WASHINGTON STATE DEPARTMENT OF TRANSPORTATION. A COPY MAY BE OBTAINED UPON REQUEST.

CONCRETE INLET

STANDARD PLAN B-25.60-00

SHEET 1 OF 1 SHEET

APPROVED FOR PUBLICATION

Harold J. Peterfeso — STATE DESIGN ENGINEER

06-01-06 — DATE

Washington State Department of Transportation

DRAWN BY: MARK SUJKA

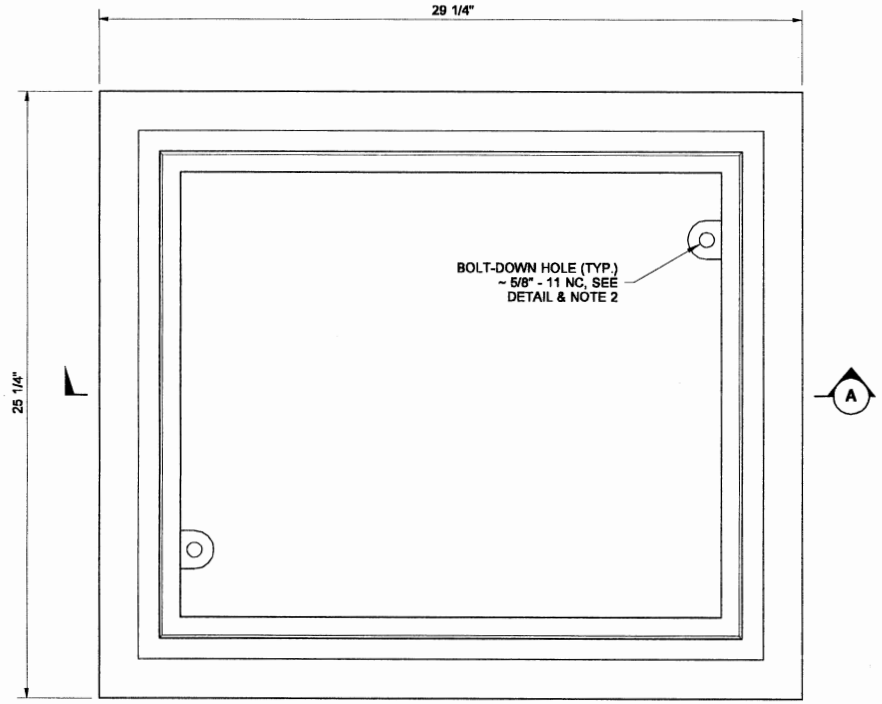

TOP

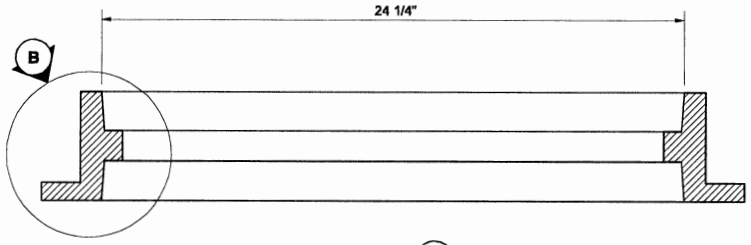

SECTION (A)

NOTES

1. This frame is designed to accommodate 20" × 24" grates or covers as shown on Standard Plans B-30.20, B-30.30, B-30.40 and B-30.50.
2. When bolt-down grates or covers are specified in the Contract, provide two holes in the frame that are vertically aligned with the grate or cover slots. Tap each hole to accept a 5/8" - 11 NC × 2" allen head cap screw. Location of bolt down holes varies among different manufacturers.
3. Refer to Standard Specification 9-05.15(2) for additional requirements.

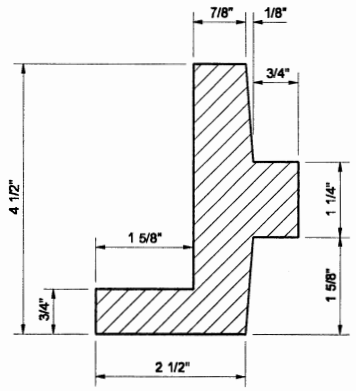

DETAIL (B)

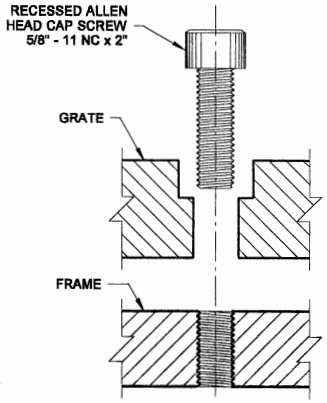

SECTION

BOLT-DOWN DETAIL
SEE NOTE 2

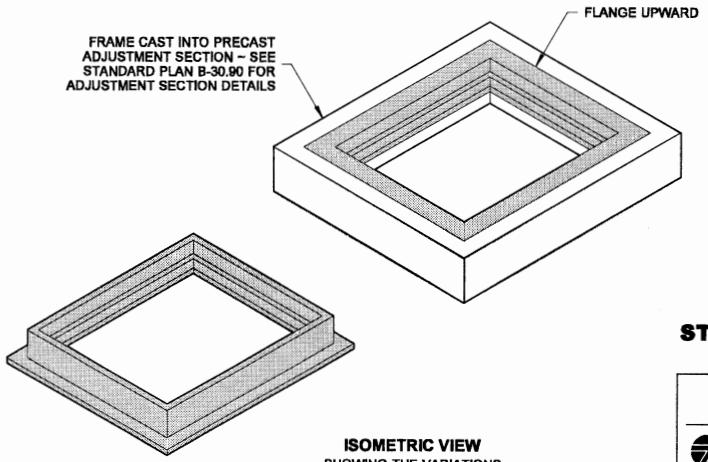

ISOMETRIC VIEW
SHOWING THE VARIATIONS

EXPIRES JULY 1, 2007

NOTE: THIS PLAN IS NOT A LEGAL ENGINEERING DOCUMENT UNLESS ITS ORIGINAL SEAL, SIGNATURE AND DATE ARE ON FILE WITH THE ENGINEER AND APPROVED FOR PUBLICATION, IS KEPT ON FILE AT THE WASHINGTON STATE DEPARTMENT OF TRANSPORTATION. A COPY MAY BE OBTAINED UPON REQUEST.

RECTANGULAR FRAME (REVERSIBLE)

STANDARD PLAN B-30.10-00

SHEET 1 OF 1 SHEET

APPROVED FOR PUBLICATION

Harold J. Peterfeso — STATE DESIGN ENGINEER — *06-08-06* — DATE

Washington State Department of Transportation

DRAWN BY: MARK SUJKA

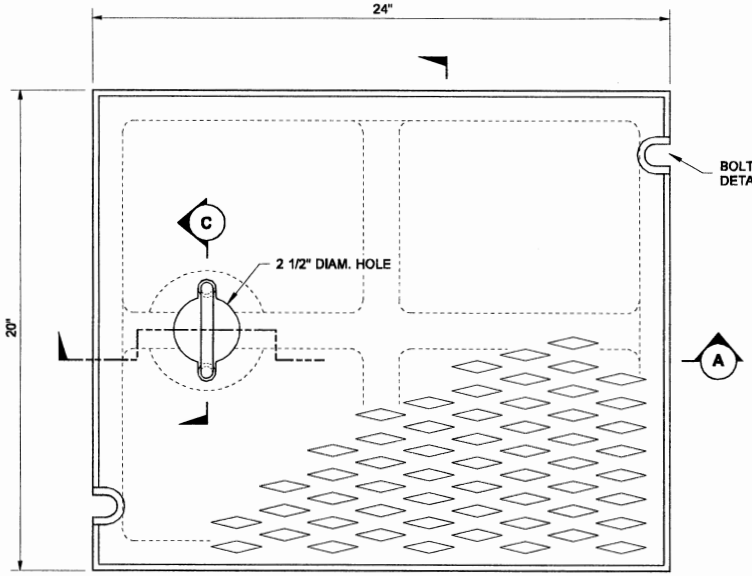

TOP

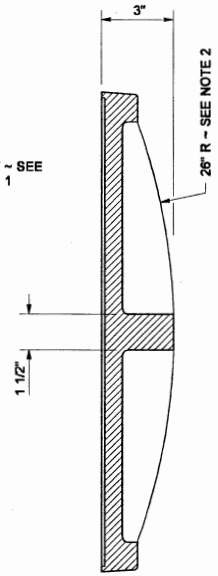

SECTION B

NOTES

1. When bolt-down covers are specified in the Contract, provide two slots in the cover that are vertically aligned with the holes in the frame. Location of bolt-down slots varies among different manufacturers.
2. Alternative reinforcing designs are acceptable in lieu of the rib design.
3. Refer to Standard Specification 9-05.15(2) for additional requirements.
4. For frame details, see Standard Plan B-30.10.

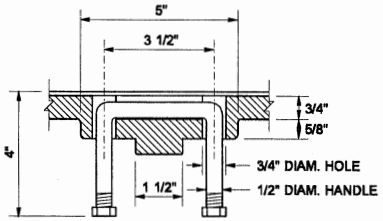

SECTION C

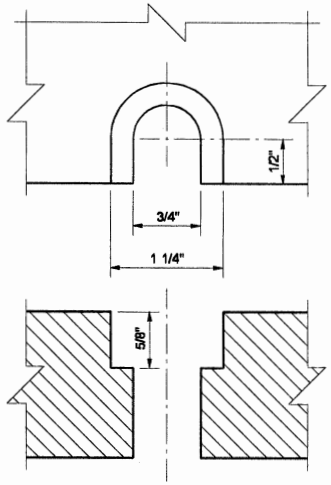

BOLT-DOWN SLOT DETAIL
SEE NOTE 1

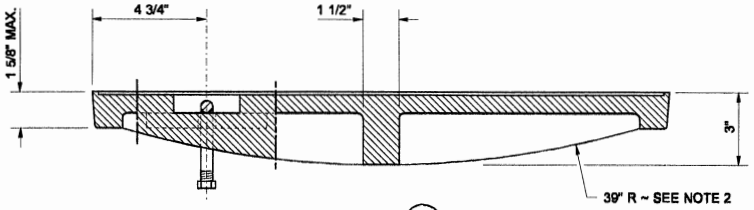

SECTION A

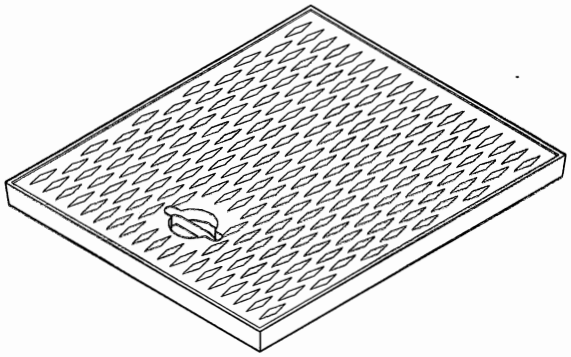

ISOMETRIC

NOTE: THIS PLAN IS NOT A LEGAL ENGINEERING DOCUMENT UNLESS SIGNED AND SEALED. THE ORIGINAL, SIGNED BY THE ENGINEER, IS ON FILE IN THE ENGINEERING SECTION, REAL ESTATE, WASHINGTON STATE DEPARTMENT OF TRANSPORTATION. A COPY MAY BE OBTAINED UPON REQUEST.

RECTANGULAR SOLID METAL COVER

STANDARD PLAN B-30.20-01

SHEET 1 OF 1 SHEET

APPROVED FOR PUBLICATION

Kevin J. Dayton — STATE DESIGN ENGINEER

11-21-06 — DATE

Washington State Department of Transportation

DRAWN BY: MARK SUJKA

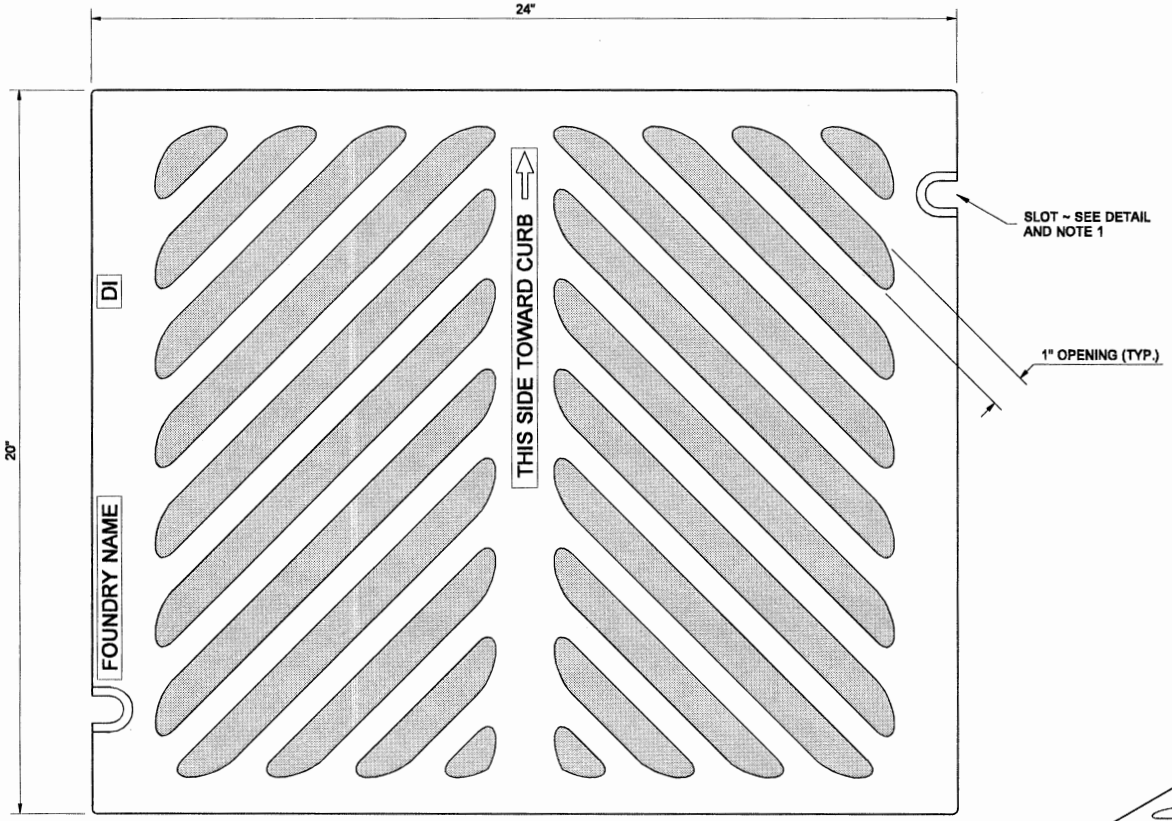

TOP

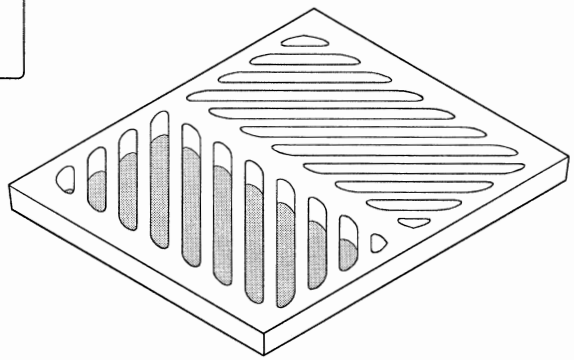

ISOMETRIC

NOTES

1. When bolt-down grates are specified in the Contract, provide two slots in the grate that are vertically aligned with the holes in the frame. Location of bolt-down slots varies among different manufacturers.
2. Refer to Standard Specification 9-05.15(2) for additional requirements.
3. For Frame details, see Standard Plan B-30.10.
4. The thickness of the grate shall not exceed 1 5/8".

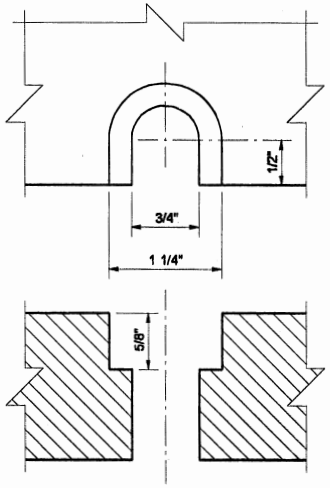

BOLT-DOWN SLOT DETAIL
SEE NOTE 1

NOTE: THIS PLAN IS NOT A LEGAL ENGINEERING DOCUMENT UNLESS ELECTRONICALLY SEALED. THE ORIGINAL SEALED PLAN IS KEPT BY THE ENGINEER AND APPROVED FOR PUBLICATION, IS KEPT ON FILE AT THE WASHINGTON STATE DEPARTMENT OF TRANSPORTATION. A COPY MAY BE OBTAINED UPON REQUEST.

RECTANGULAR HERRINGBONE GRATE

STANDARD PLAN B-30.50-00

SHEET 1 OF 1 SHEET

APPROVED FOR PUBLICATION

Harold J. Peterfeso — STATE DESIGN ENGINEER
06-01-06 — DATE

Washington State Department of Transportation

DRAWN BY: LISA CYFORD

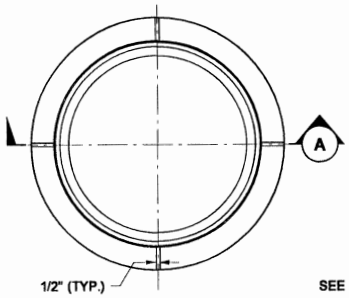

RING PLAN

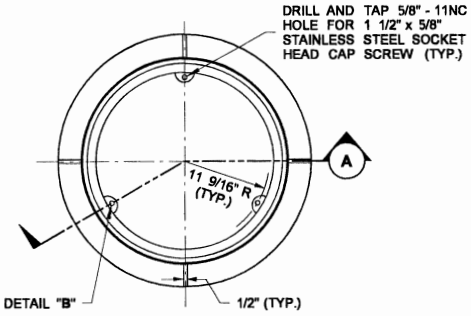

RING PLAN

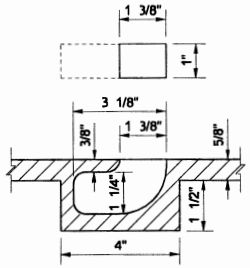

BLIND PICK NOTCH

DETAIL "A"

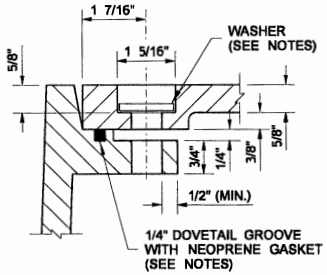

BOLT-DOWN / WATERTIGHT

DETAIL "B"

NOTES

1. The gasket and groove may be in the seat (frame) or in the underside of the cover. The gasket may be "T" shaped in section. The groove may be cast or machined.
2. For bolt-down manhole ring and covers that are not designated "Watertight," the neoprene gasket, groove, and washer are not required.
3. Washer shall be neoprene (Detail "B").
4. In lieu of blind pick notch for storm sewer manhole covers, a single 1" pick hole is acceptable. Hole location and number of holes may vary by manufacturer.
5. Proprietary manhole covers without bottom ribs are acceptable.
6. For clarity, the vertical scale of the Cover Section has been exaggerated, it is 1.5 times the horizontal scale (1H:1.5V).

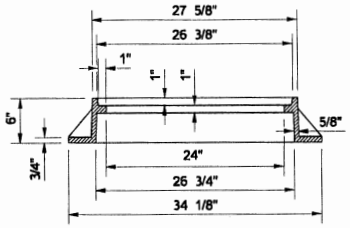

RING SECTION (A)

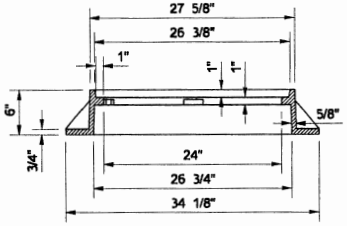

RING SECTION (A)

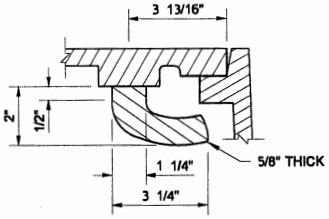

BOLT ON CAM TYPE LOCKING DEVICE

SECTION (C)

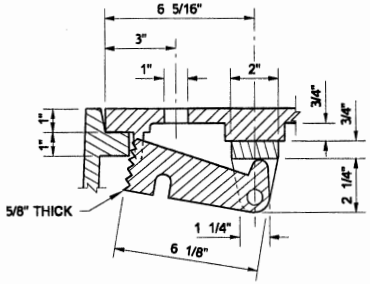

BOLT ON CAM TYPE LOCKING DEVICE

DETAIL "C"

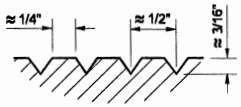

SKID GROOVE PATTERN DETAIL

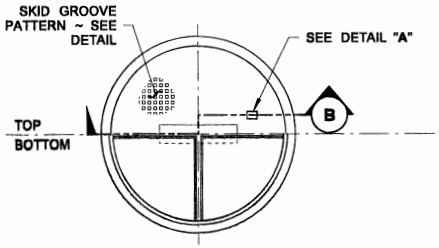

COVER PLAN

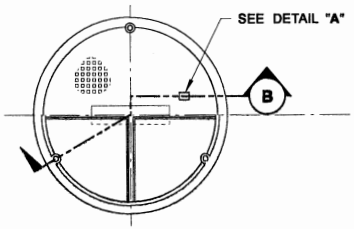

COVER PLAN

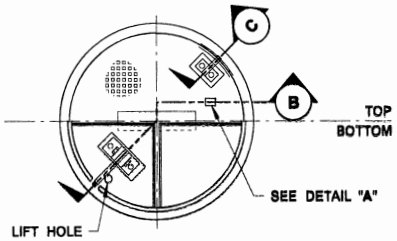

COVER PLAN

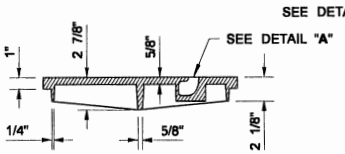

COVER SECTION (B)

(SEE NOTE 6)

STANDARD

TYPE 1

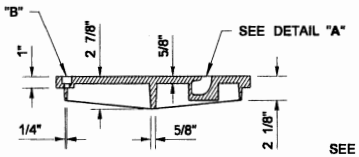

COVER SECTION (B)

(SEE NOTE 6)

BOLT-DOWN/WATERTIGHT

TYPE 2

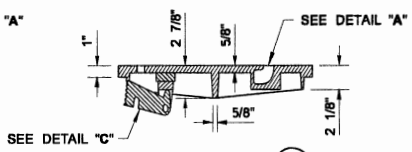

COVER SECTION (B)

(SEE NOTE 6)

CAMLOCK

TYPE 3

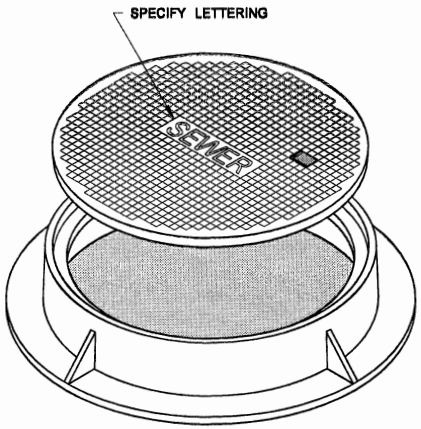

ISOMETRIC VIEW

NOTE: THIS PLAN IS NOT A LEGAL DOCUMENT BUT AN ELECTRONIC DUPLICATE THEREOF. THE ORIGINAL IS SEALED AND SIGNED AND MAY BE OBTAINED FROM THE WSDOT ON FILE AT THE WASHINGTON STATE DEPARTMENT OF TRANSPORTATION. A COPY MAY BE OBTAINED UPON REQUEST.

CIRCULAR FRAME (RING) AND COVER

STANDARD PLAN B-30.70-02

SHEET 1 OF 1 SHEET

APPROVED FOR PUBLICATION

Pasco Bakotich III — 06-16-11

STATE DESIGN ENGINEER — DATE

Washington State Department of Transportation

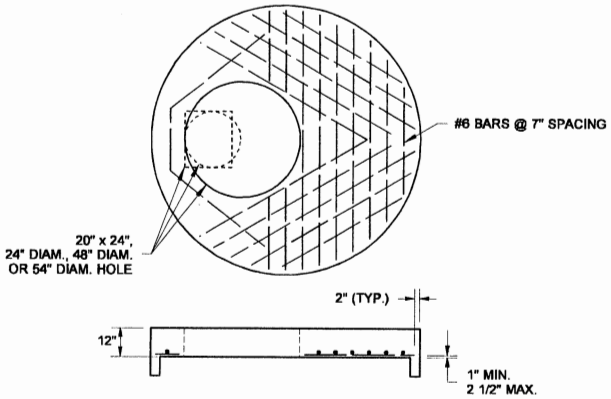

84" or 96" FLAT SLAB TOP

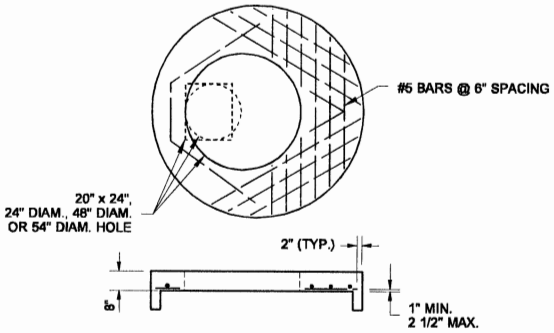

72" FLAT SLAB TOP

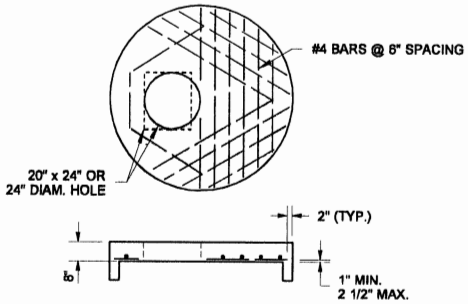

48", 54", or 60" FLAT SLAB TOP

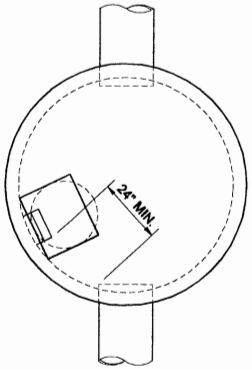

TYPICAL ORIENTATION FOR ACCESS AND STEPS

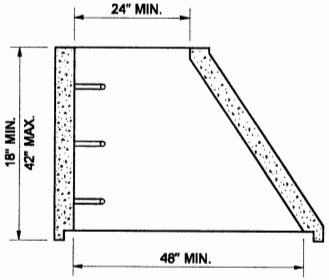

ECCENTRIC CONE SECTION

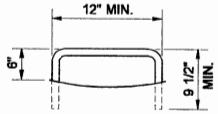

STEP

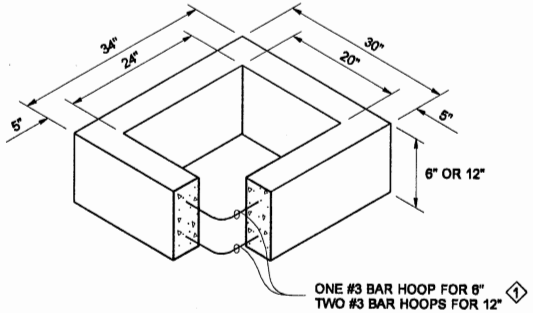

RECTANGULAR ADJUSTMENT SECTION

1 As an acceptable alternative to rebar, wire mesh having a minimum area of 0.12 square inches per foot may be used for adjustment sections.

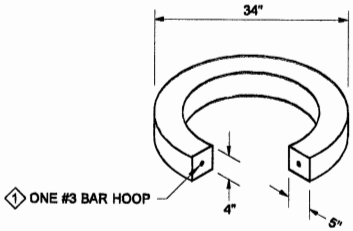

CIRCULAR ADJUSTMENT SECTION

NOTE

Ladder rungs for manholes and catch basins shall meet the requirements of AASHTO M 199.

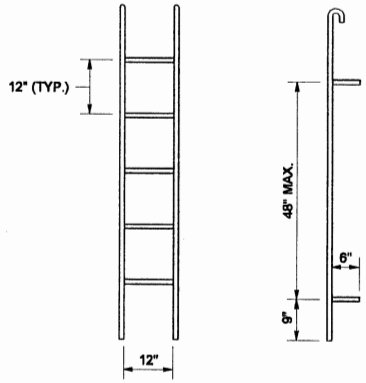

PREFABRICATED LADDER

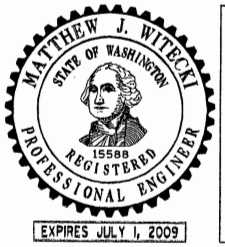

NOTE: THIS PLAN IS NOT A LEGAL ENGINEERING DOCUMENT UNLESS AND UNTIL IT BEARS THE ORIGINAL WET SEAL OF THE ENGINEER AND APPROVED FOR PUBLICATION. IS SEPT ON FILE AT THE WASHINGTON STATE DEPARTMENT OF TRANSPORTATION. A COPY MAY BE OBTAINED UPON REQUEST.

MISCELLANEOUS DETAILS FOR DRAINAGE STRUCTURES STANDARD PLAN B-30.90-01

SHEET 1 OF 1 SHEET

APPROVED FOR PUBLICATION

Pasco Bakotich III — STATE DESIGN ENGINEER

09-20-07 — DATE

Washington State Department of Transportation

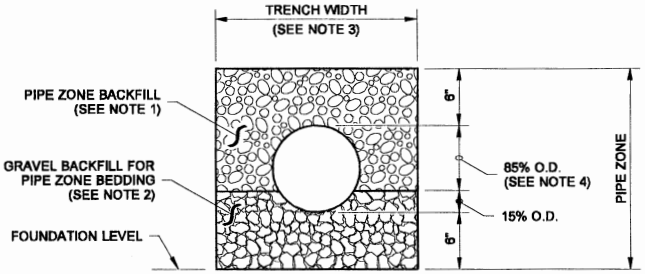

CONCRETE AND DUCTILE IRON PIPE

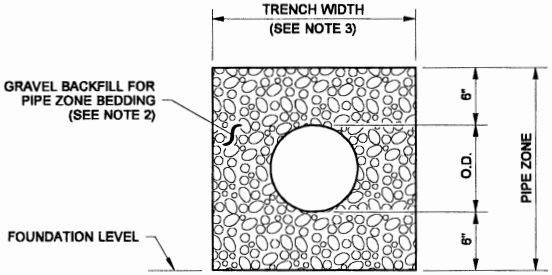

THERMOPLASTIC PIPE

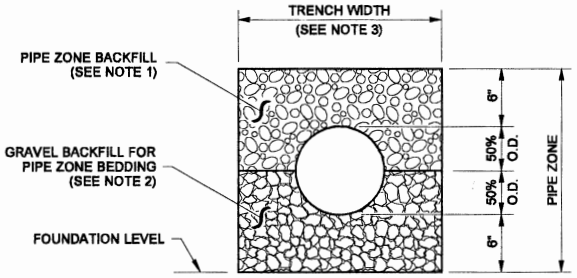

METAL PIPE

NOTES

1. See Standard Specifications Section 7-08.3(3) for Pipe Zone Backfill.
2. See Standard Specifications Section 9-03.12(3) for Gravel Backfill for Pipe Zone Bedding.
3. See Standard Specifications Section 2-09.4 for Measurement of Trench Width.
4. For sanitary sewer installation, concrete pipe shall be bedded to spring line.

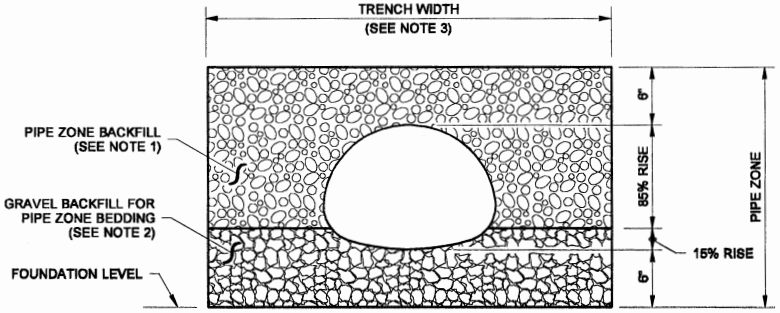

PIPE ARCHES

CLEARANCE BETWEEN PIPES FOR MULTIPLE INSTALLATIONS		
PIPE	**SIZE**	**MINIMUM DISTANCE BETWEEN BARRELS**
CIRCULAR PIPE (DIAMETER)	12" to 24"	12"
	30" to 96"	DIAM. /2
	102" to 180"	48"
PIPE ARCH (SPAN) METAL ONLY	18" to 36"	12"
	43" to 142"	SPAN /3
	148" to 200"	48"

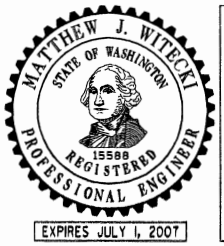

NOTE: THIS PLAN IS NOT A LEGAL ENGINEERING DOCUMENT UNLESS IT HAS ELECTRONIC DUPLICATE. THE ORIGINAL, SIGNED BY THE ENGINEER, IS ON FILE AT THE WASHINGTON STATE DEPARTMENT OF TRANSPORTATION. A COPY MAY BE OBTAINED UPON REQUEST.

PIPE ZONE BEDDING AND BACKFILL

STANDARD PLAN B-55.20-00

SHEET 1 OF 1 SHEET

APPROVED FOR PUBLICATION

Harold J. Peterfeso — STATE DESIGN ENGINEER

06-01-06 — DATE

Washington State Department of Transportation

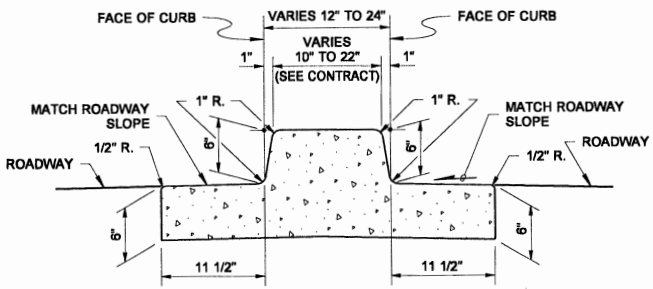

DUAL-FACED CEMENT CONCRETE TRAFFIC CURB AND GUTTER

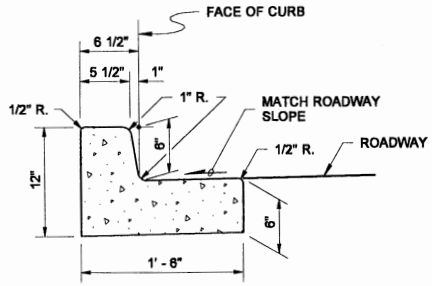

CEMENT CONCRETE TRAFFIC CURB AND GUTTER

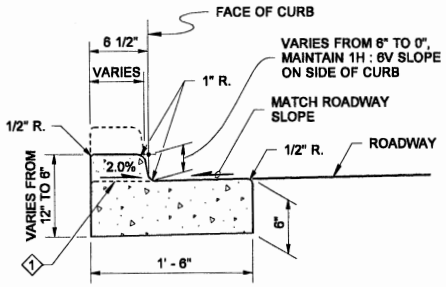

DEPRESSED CURB SECTION

AT CURB RAMPS AND DRIVEWAY ENTRANCES

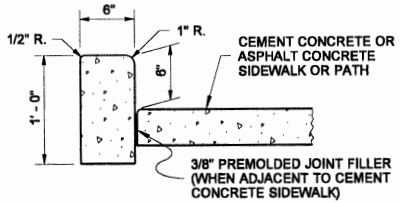

CEMENT CONCRETE PEDESTRIAN CURB

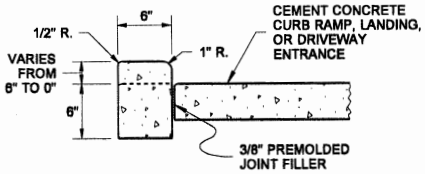

CEMENT CONCRETE PEDESTRIAN CURB

AT CURB RAMPS, LANDINGS, AND DRIVEWAY ENTRANCES

NOTE

1. **See Standard Plan F-30.10** for Curb Expansion and Contraction Joint spacing.

1 FLUSH WITH GUTTER PAN AT CURB RAMP ENTRANCE ~ 1/2" VERTICAL LIP AT DRIVEWAY ENTRANCE

DRAWN BY: FERN LIDDELL

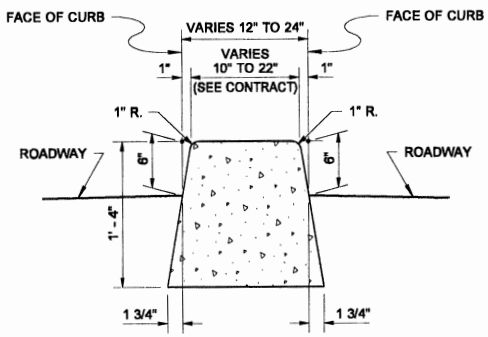

DUAL-FACED CEMENT CONCRETE TRAFFIC CURB

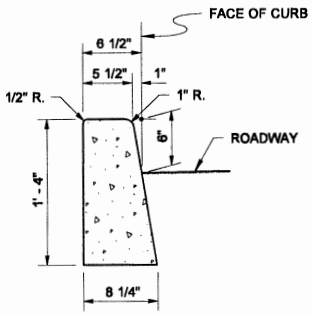

CEMENT CONCRETE TRAFFIC CURB

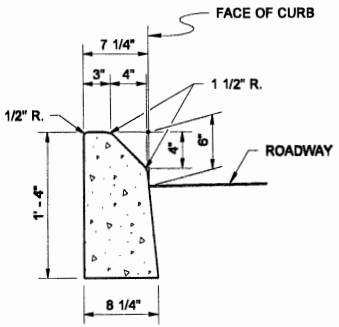

MOUNTABLE CEMENT CONCRETE TRAFFIC CURB

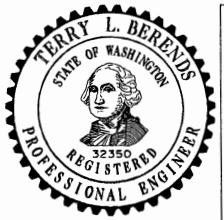

NOTE: THIS PLAN IS NOT A LEGAL ENGINEERING DOCUMENT BUT AN ELECTRONIC DUPLICATE. THE ORIGINAL SIGNED BY THE ENGINEER AND ON FILE IN THE OFFICE OF RECORD RELAT THE WASHINGTON STATE DEPARTMENT OF TRANSPORTATION. A COPY MAY BE OBTAINED UPON REQUEST.

CEMENT CONCRETE CURBS

STANDARD PLAN F-10.12-02

SHEET 1 OF 1 SHEET

APPROVED FOR PUBLICATION

Pasco Bakotich III — STATE DESIGN ENGINEER

06-16-11 — DATE

Washington State Department of Transportation

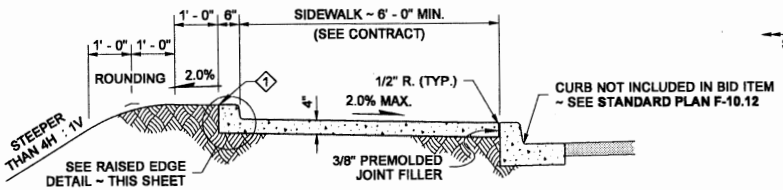

WITH RAISED EDGE

1 FINISHED GRADE 1" BELOW TOP OF CONCRETE SURFACE

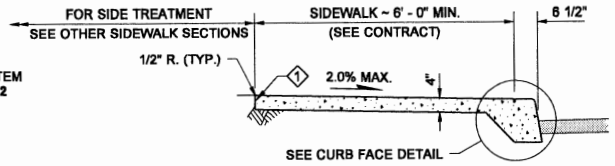

MONOLITHIC CEMENT CONCRETE CURB AND SIDEWALK

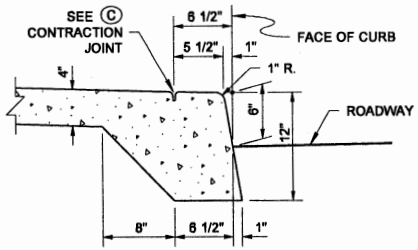

NOTE: Extend sidewalk transverse expansion joints to include curb (full depth).

CURB FACE DETAIL

NOTE

1. Four feet of the sidewalk width shall be the minimum pedestrian accessible route free of vertical and horizontal obstructions. Gratings, access covers, junction boxes, cable vaults, pull boxes and other appurtenances within the sidewalk must have slip resistant surfaces and be flush with surface and match grade of the sidewalk.

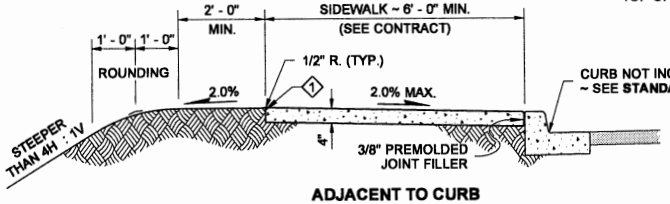

ADJACENT TO CURB
(STEEP FILL SLOPES)

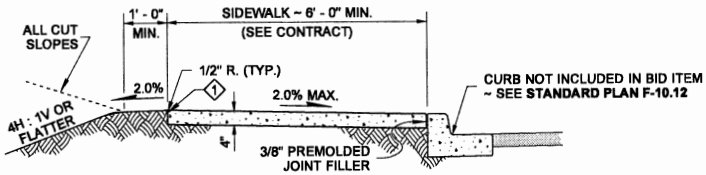

ADJACENT TO CURB

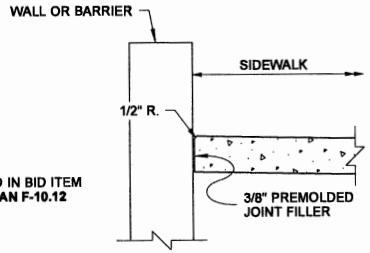

SIDEWALK ADJACENT TO WALL DETAIL

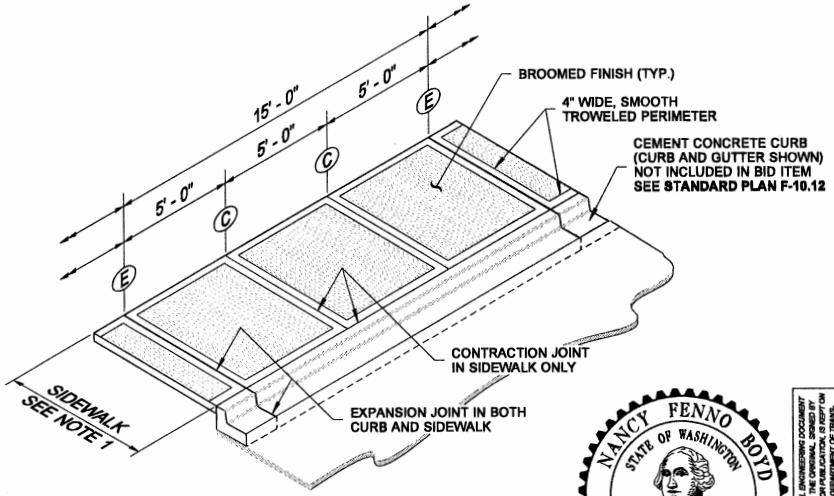

ISOMETRIC VIEW

JOINT AND FINISH DETAIL

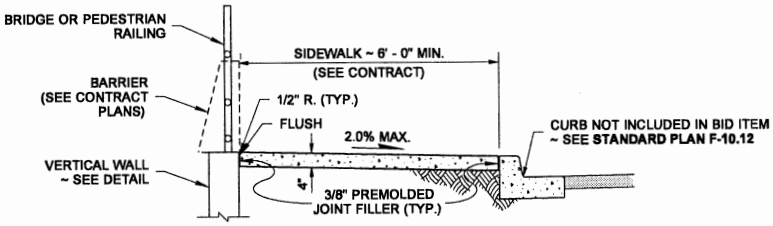

ADJACENT TO CURB AND RAILING OR WALL

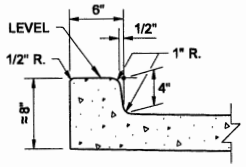

NOTE: EXTEND SIDEWALK TRANSVERSE JOINTS TO INCLUDE RAISED EDGE

RAISED EDGE DETAIL

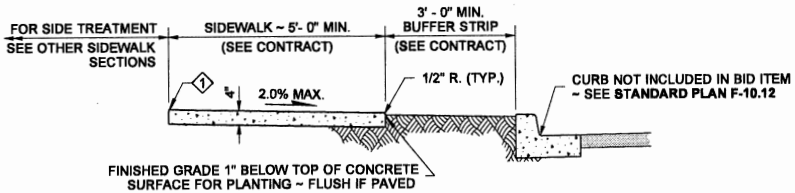

ADJACENT TO BUFFER STRIP

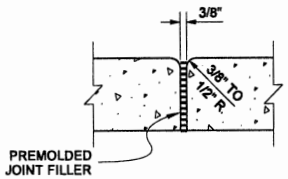

E EXPANSION JOINT

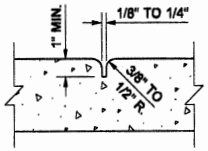

C CONTRACTION JOINT

NOTE: THIS PLAN IS NOT A LEGAL ENGINEERING DOCUMENT BUT AN ELECTRONIC DUPLICATE. THE ORIGINAL, SIGNED BY THE ENGINEER, IS ON FILE AT THE WASHINGTON STATE DEPARTMENT OF TRANSPORTATION. A COPY MAY BE OBTAINED UPON REQUEST.

CEMENT CONCRETE SIDEWALK

STANDARD PLAN F-30.10-01

SHEET 1 OF 1 SHEET

APPROVED FOR PUBLICATION

Pasco Bakotich III — STATE DESIGN ENGINEER — *06-03-10* — DATE

Washington State Department of Transportation

DRAWN BY: FERN LIDDELL

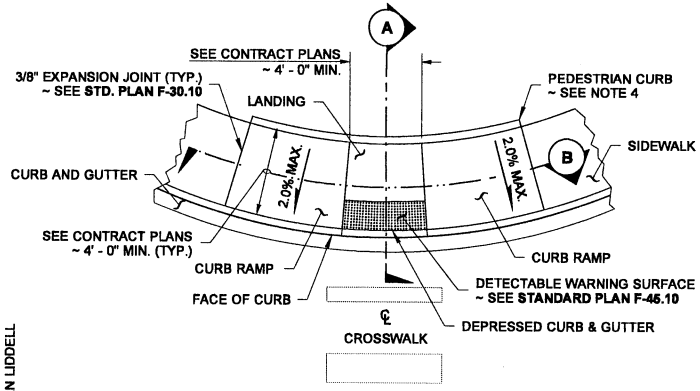

PLAN VIEW
TYPE PARALLEL A

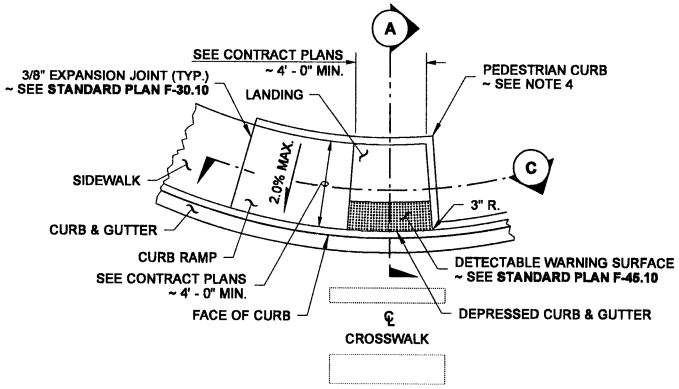

PLAN VIEW
TYPE PARALLEL B

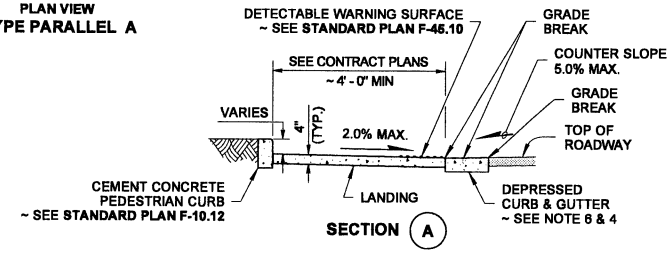

SECTION A

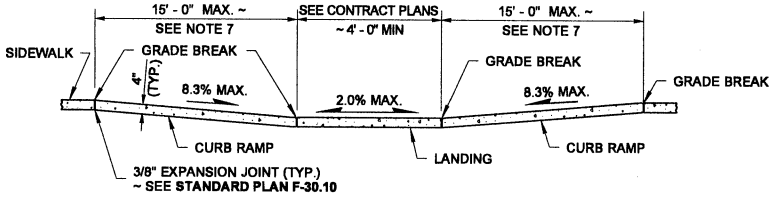

SECTION B

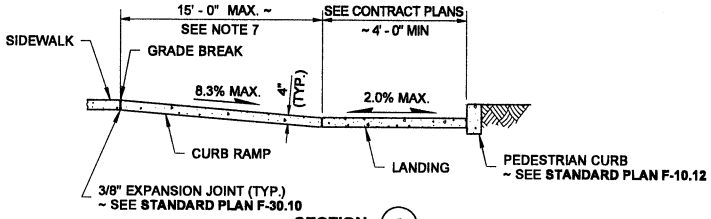

SECTION C

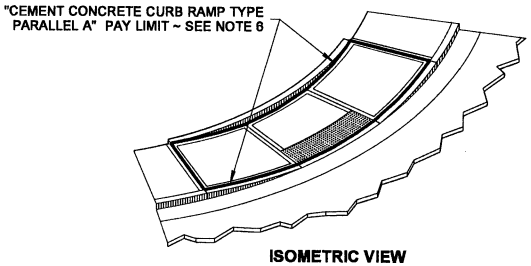

ISOMETRIC VIEW
TYPE PARALLEL A PAY LIMIT

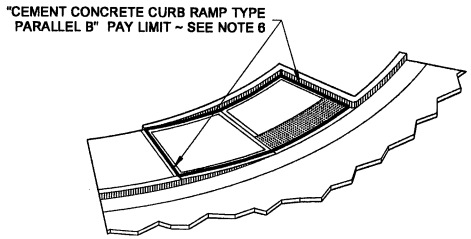

ISOMETRIC VIEW
TYPE PARALLEL B PAY LIMIT

DRAWN BY: FERN LIDDELL

NOTES

1. Provide a separate curb ramp for each marked or unmarked crosswalk. Curb ramp location shall be placed within the width of the associated crosswalk, or as shown in the Contract Plans.
2. Where "GRADE BREAK" is called out, the entire length of the grade break between the two adjacent surface planes shall be flush.
3. Do not place gratings, junction boxes, access covers, or other appurtenances in front of thre curb ramp or on any part of the curb ramp or landing.
4. See Contract Plans for the curb design specified. See **Standard Plan F-10.12** for Curb, Curb and Gutter, and Pedestrian Curb Details.
5. See **Standard Plan F-30.10** for Cement Concrete Sidewalk Details. See Contract Plans for width and placement of sidewalk.
6. The Bid Item "Cement Concrete Curb Ramp Type __" does not include the adacent Curb, Curb and Gutter, Pedestrian Curb or Sidewalks.
7. The curb ramp maximum running slope shall not require the ramp length to exceed 15 feet to avoid chasing the slope indefinitely when connecting to steep grades. When applying the 15 foot max. length, the running slope of the curb ramp shall be as flat as feasable.
8. Curb ramp, landing, & flares shall receive broom finish. See **Standard Specifications 8-14.**

LEGEND

SLOPE IN EITHER DIRECTION

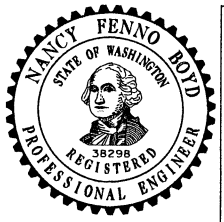

NOTE: THIS PLAN IS NOT A LEGAL ENGINEERING DOCUMENT UNLESS IT BEARS THE ENGINEER'S SEAL AND SIGNATURE. IF IT THE ENGINEER'S AND APPROVED FOR PUBLICATION, IS KEPT ON FILE AT THE WASHINGTON STATE DEPARTMENT OF TRANSPORTATION. A COPY MAY BE OBTAINED UPON REQUEST.

PARALLEL CURB RAMP

STANDARD PLAN F-40.12-01

SHEET 1 OF 1 SHEET

APPROVED FOR PUBLICATION

Pasco Bakotich III — STATE DESIGN ENGINEER — *06-03-10* — DATE

Washington State Department of Transportation

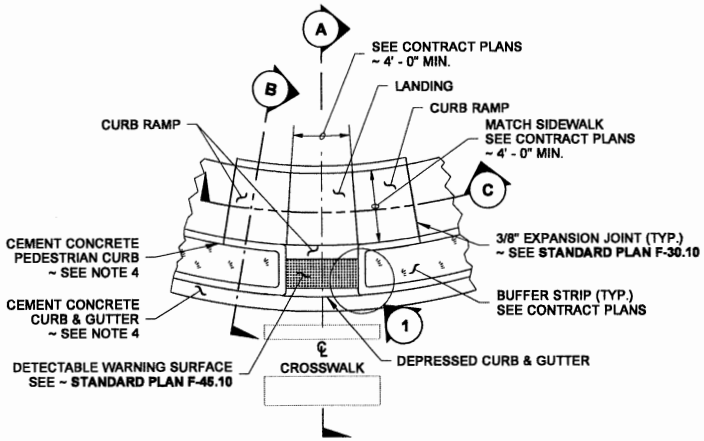

PLAN VIEW

TYPE COMBINATION

WITH BUFFER

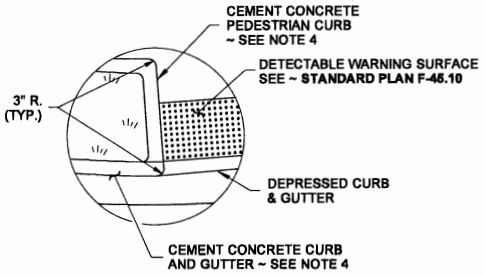

CURB RADIUS DETAIL (1)

NOTES

1. Provide a separate curb ramp for each marked or unmarked crosswalk. Curb ramp location shall be placed within the width of the associated crosswalk, or as shown in the Contract Plans.
2. Where "GRADE BREAK" is called out, the entire length of the grade break between the two adjacent surface planes shall be flush.
3. Do not place gratings, junction boxes, access covers, or other appurtenances in front of thre curb ramp or on any part of the curb ramp or landing.
4. See Contract Plans for the curb design specified. See **Standard Plan F-10.12** for Curb, Curb and Gutter, and Pedestrian Curb Details.
5. See **Standard Plan F-30.10** for Cement Concrete Sidewalk Details. See Contract Plans for width and placement of sidewalk.
6. The Bid Item "Cement Concrete Curb Ramp Type __" does not include the adacent Curb, Curb and Gutter, Pedestrian Curb or Sidewalks.
7. The curb ramp maximum running slope shall not require the ramp length to exceed 15 feet to avoid chasing the slope indefinitely when connecting to steep grades. When applying the 15 foot max. length, the running slope of the curb ramp shall be as flat as feasable.
8. Curb ramp, landing & flares shall receive broom finish. See **Standard Specifications 8-14.**

LEGEND

SLOPE IN EITHER DIRECTION

DRAWN BY: FERN LIDDELL

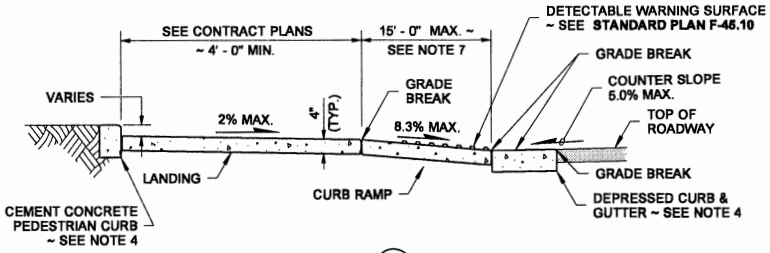

SECTION (A)

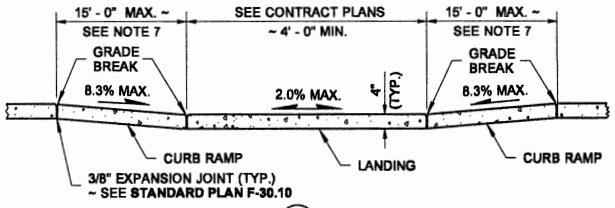

SECTION (C)

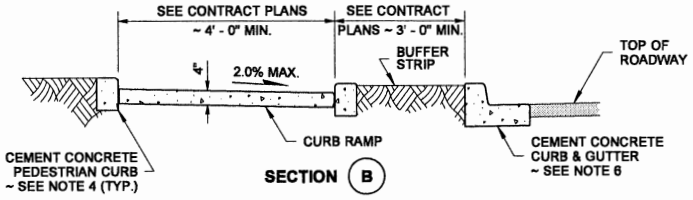

SECTION (B)

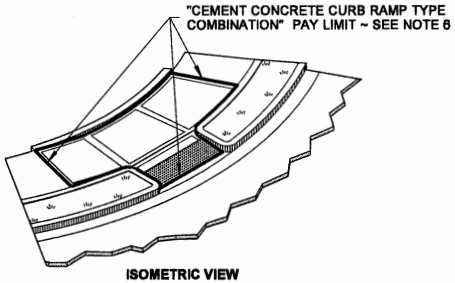

ISOMETRIC VIEW

TYPE COMBINATION
PAY LIMIT

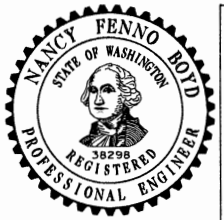

NOTE: THIS PLAN IS NOT A LEGAL ENGINEERING DOCUMENT BUT AN ELECTRONIC DUPLICATE. THE ORIGINAL, SIGNED BY THE ENGINEER, AUTHORIZED FOR PUBLICATION, IS ON FILE AT THE WASHINGTON STATE DEPARTMENT OF TRANSPORTATION. A COPY MAY BE OBTAINED UPON REQUEST.

COMBINATION CURB RAMP

STANDARD PLAN F-40.14-01

SHEET 1 OF 1 SHEET

APPROVED FOR PUBLICATION

Pasco Bakotich III — STATE DESIGN ENGINEER

06-03-10 — DATE

Washington State Department of Transportation

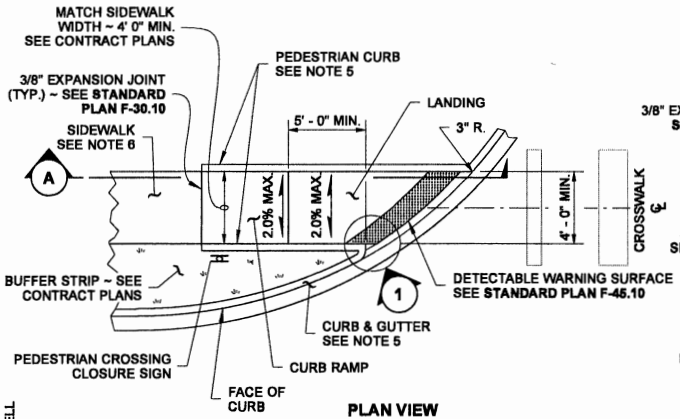

PLAN VIEW
TYPE SINGLE DIRECTION A

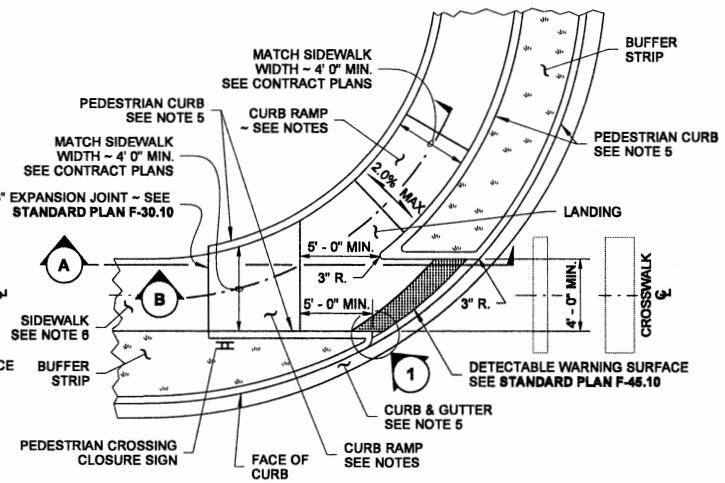

PLAN VIEW
TYPE SINGLE DIRECTION B

NOTES

1. This plan is to be used where pedestrian crossing in one direction is not permitted.
2. Curb ramp location shall be placed within the width of the associated crosswalk, or as shown in the Contract Plans.
3. Where "GRADE BREAK" is called out, the entire length of the grade break between the two adjacent surface planes shall be flush.
4. Do not place gratings, junction boxes, access covers or other appurtenances in front of the curb ramp or on any part of the curb ramp or landing.
5. See the Contract Documents for the curb design specified. See **Standard Plan F-10.12** for Curb, Curb and Gutter, and Pedestrian Curb details.
6. **See Standard Plan F-30.10** for Cement Concrete Sidewalk Details. See contract plans for width and placement of sidewalk.
7. The bid item "Cement Concrete Curb Ramp Type __" does not include the adjacent Curb or (Curb and Gutter), Pedestrian Curb or Sidewalk, or the pedestrian crossing closure sign.
8. The curb ramp maximum running slope shall not require the ramp length to exceed 15 feet to avoid chasing the slope indefinitely when connecting to steep grades. When applying the 15 foot maximum length, the running slope of the curb ramp shall be as flat as feasible.
9. Curb ramps and landings shall receive broom finish. **See Standard Specifications 8-14.**

DRAWN BY: FERN LIDDELL

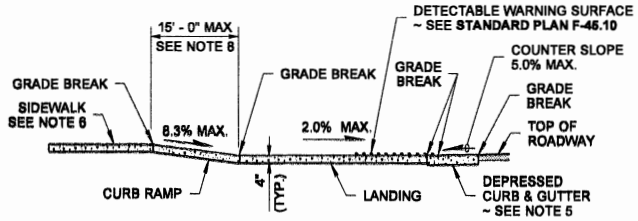

SECTION (A)

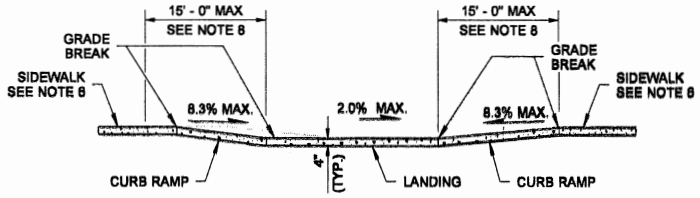

SECTION (B)

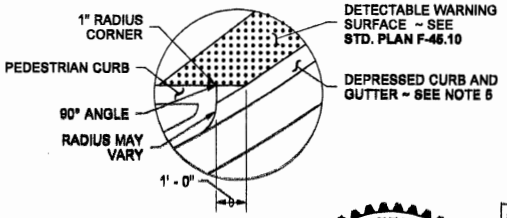

DETAIL (1)

LEGEND

SLOPE IN EITHER DIRECTION

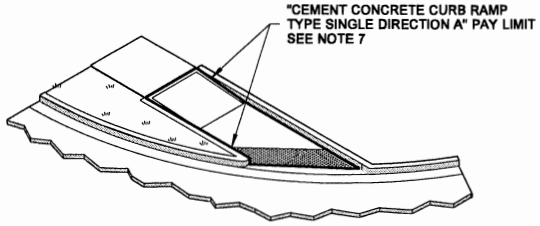

ISOMETRIC VIEW
TYPE SINGLE DIRECTION A
PAY LIMIT

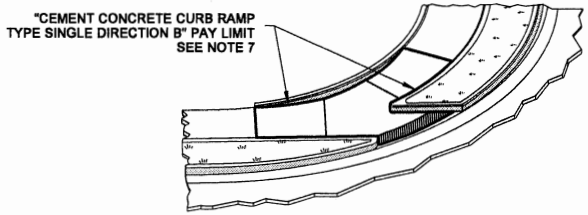

ISOMETRIC VIEW
TYPE SINGLE DIRECTION B
PAY LIMIT

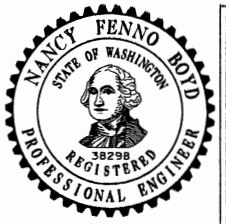

NOTE: THIS PLAN IS NOT A LEGAL ENGINEERING DOCUMENT BUT AN ELECTRONIC DUPLICATE. THE ORIGINAL, SIGNED BY THE ENGINEER, IS KEPT ON FILE AT THE WSDOT HEADQUARTERS FILE AT THE WASHINGTON STATE DEPARTMENT OF TRANSPORTATION. A COPY MAY BE OBTAINED UPON REQUEST.

SINGLE DIRECTION CURB RAMP

STANDARD PLAN F-40.16-01

SHEET 1 OF 1 SHEET

APPROVED FOR PUBLICATION

Pasco Bakotich III — STATE DESIGN ENGINEER
06-03-10 — DATE

Washington State Department of Transportation

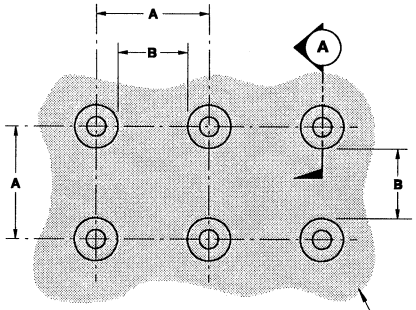

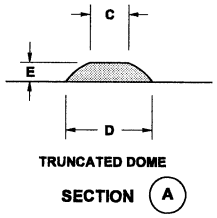

	MIN.	MAX.
A	1.60"	2.40"
B	0.65"	—
C	0.45"	0.90"
D	0.9"	1.40"
E	0.2"	0.2"

TRUNCATED DOME DETAILS

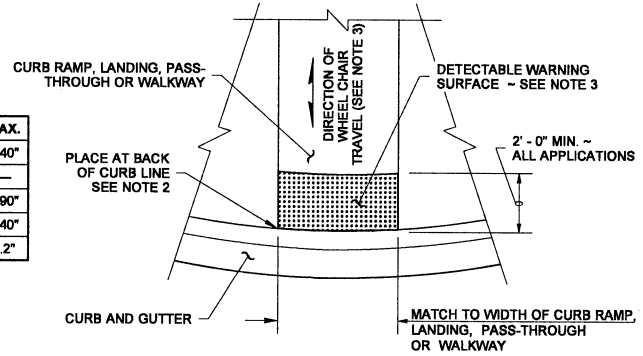

DETECTABLE WARNING SURFACE DETAIL

NOTES

1. The Detectable Warning Surface shall extend the full width of the curb ramp (exclusive of flares) or the landing.
2. The edge of the Detectable Warning Surface shall be placed along the back of the curb line.
3. The rows of truncated domes in a Detectable Warning Surface shall be parallel with the direction of wheel chair travel.
4. See **Standard Plans** for sidewalk and curb ramp details.
5. If a curb is not present, place the Detectable Warning Surface at the edge of the pavement.
6. If a curb ramp is required, the location of the Detectable Warning Surface must be at the bottom of the ramp and within the required distance from rail.

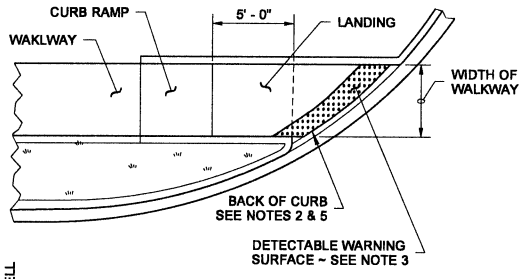

SINGLE DIRECTION CURB RAMP

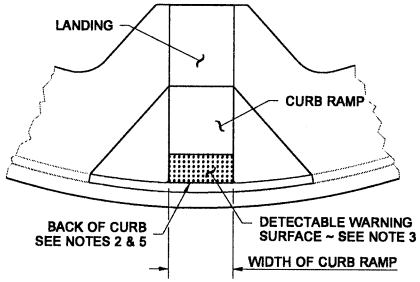

PERPENDICULAR CURB RAMP

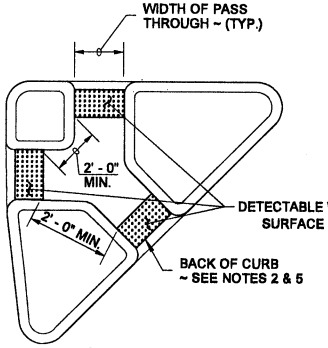

ISLAND PASS-THROUGH

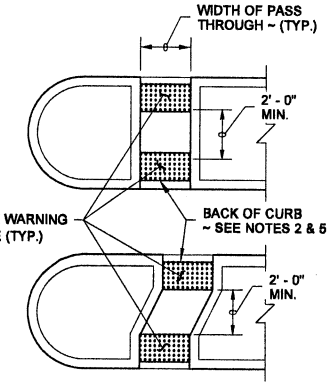

MEDIAN PASS-THROUGH

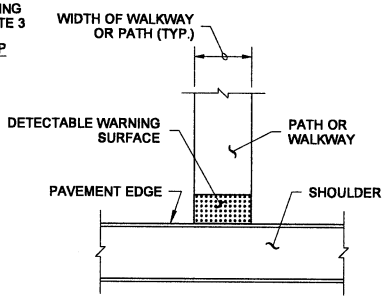

SHARED-USE PATH CONNECTION

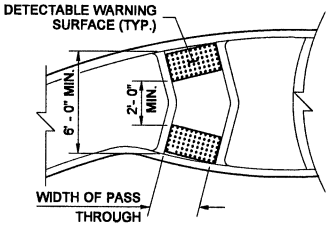

ROUNDABOUT SPLITTER ISLAND

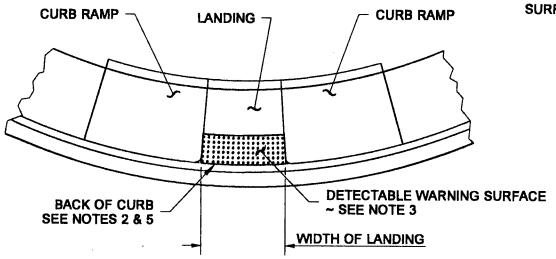

PARALLEL CURB RAMP

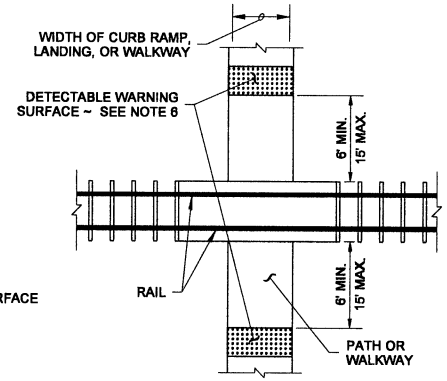

PEDESTRIAN RAILROAD CROSSING

PLACEMENT GUIDELINES

DRAWN BY: FERN LIDDELL

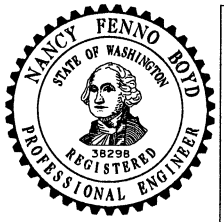

NOTE: THIS PLAN IS NOT A LEGAL ENGINEERING DOCUMENT BUT WAS PREPARED BY THE WASHINGTON STATE DOT. THE ENGINEER AND APPROVED FOR PUBLICATION, IS KEPT ON FILE AT THE WASHINGTON STATE DEPARTMENT OF TRANSPORTATION. A COPY MAY BE OBTAINED UPON REQUEST.

DETECTABLE WARNING SURFACE

STANDARD PLAN F-45.10-00

SHEET 1 OF 1 SHEET

APPROVED FOR PUBLICATION

Pasco Bakotich III — STATE DESIGN ENGINEER

06-03-10 — DATE

Washington State Department of Transportation

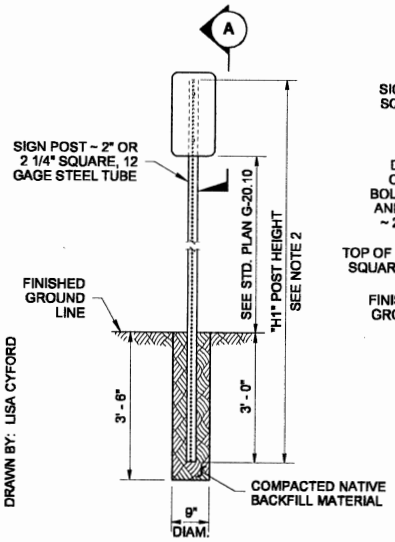

ELEVATION

TYPE ST-1 SIGN SUPPORT

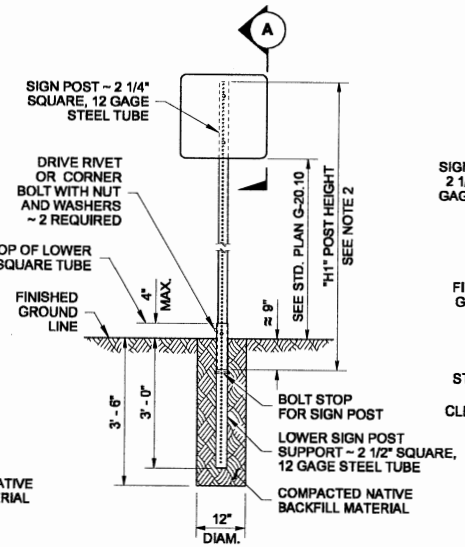

ELEVATION

TYPE ST-2 SIGN SUPPORT

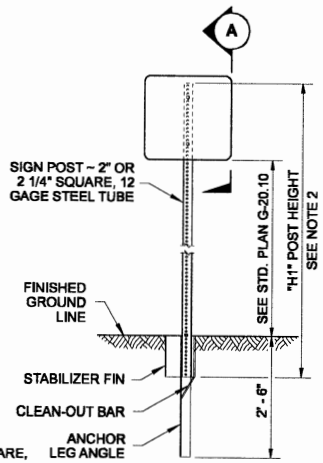

ELEVATION

TYPE ST-3 SIGN SUPPORT

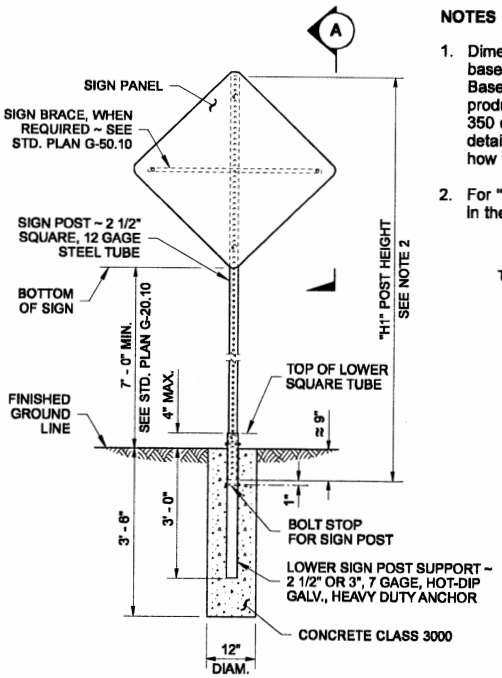

ELEVATION

TYPE ST-4 SIGN SUPPORT

NOTES

1. Dimensions for the parts used to assemble the base connections are intentionally not shown. Base connections are patented, manufactured products that are in compliance with NCHRP 350 crash test criteria. The base connection details are only shown on this plan to illustrate how the parts are assembled.
2. For "H1" refer to the Sign Specification Sheet in the Contract.

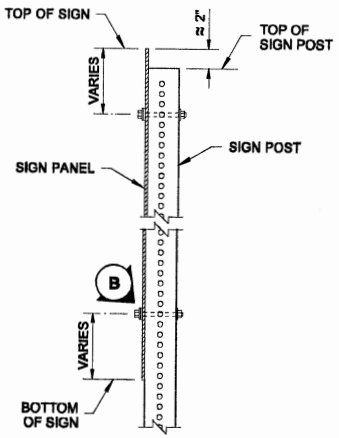

VIEW A

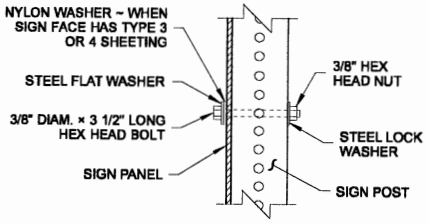

DETAIL B

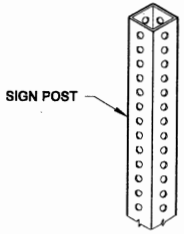

TYPE ST-1

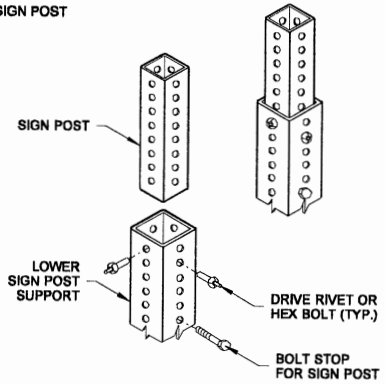

TYPE ST-2

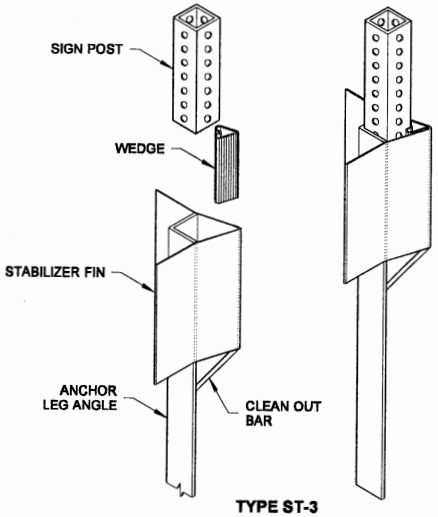

TYPE ST-3

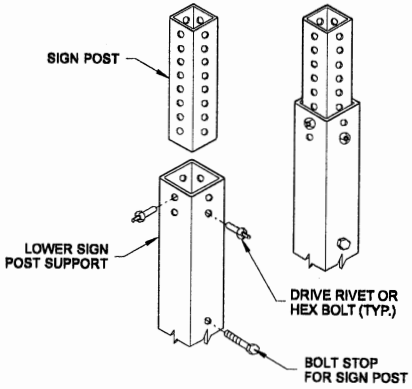

TYPE ST-4

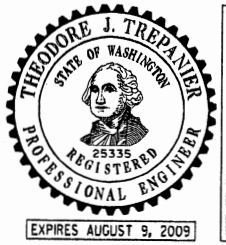

NOTE: THIS PLAN IS NOT A LEGAL ENGINEERING DOCUMENT. REFER TO WSDOT STANDARD SPECIFICATIONS. THE ENGINEER AND APPROVED FOR PUBLICATION, IS RESPONSIBLE FOR THE ENGINEERING DOCUMENT. A COPY MAY BE OBTAINED UPON REQUEST.

STEEL SIGN SUPPORT TYPES ST-1 ~ ST-4 INSTALLATION DETAILS STANDARD PLAN G-24.50.00

SHEET 1 OF 1 SHEET

APPROVED FOR PUBLICATION

Pasco Bakotich III — STATE DESIGN ENGINEER — *11-8-07* DATE

Washington State Department of Transportation

DRAWN BY: LISA CYFORD

DRAWN BY: MARK SUJKA

WOOD POST FASTENERS			
SIZE / TYPE	QUANTITY	WASHERS	LOCKNUTS
3/8" DIAM. × 4 3/4" BOLT	2	4	2
3/8" DIAM. × 3/4" BOLT	4	8	4
3/16" DIAM. × 1" SCREW	4	8	4

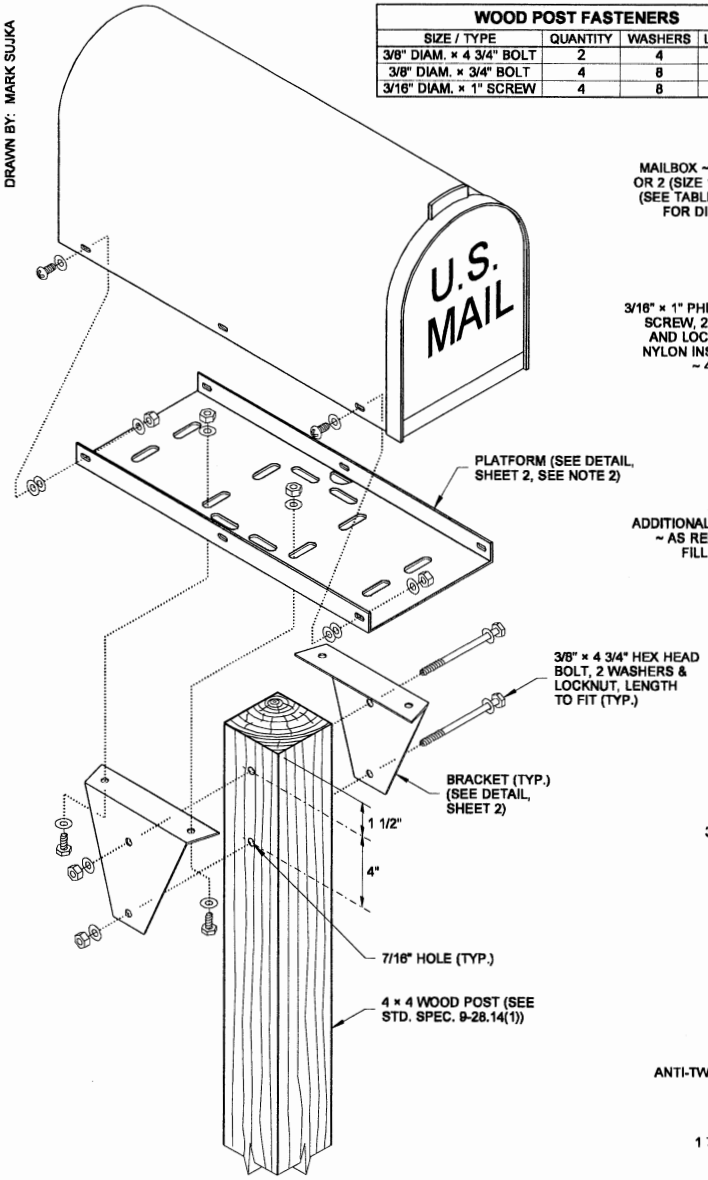

WOOD POST ASSEMBLY DETAIL

(SEE STEEL POST ASSEMBLY DETAIL FOR SPECIFICATIONS NOT SHOWN)

STEEL POST FASTENERS			
SIZE / TYPE	QUANTITY	WASHERS	LOCKNUTS
3/8" DIAM. × 2 3/4" BOLT	2	4	2
3/8" DIAM. × 3/4" BOLT	4	8	4
3/16" DIAM. × 1" SCREW	4	8	4
1 7/8" M-CLAMP	2	4	4

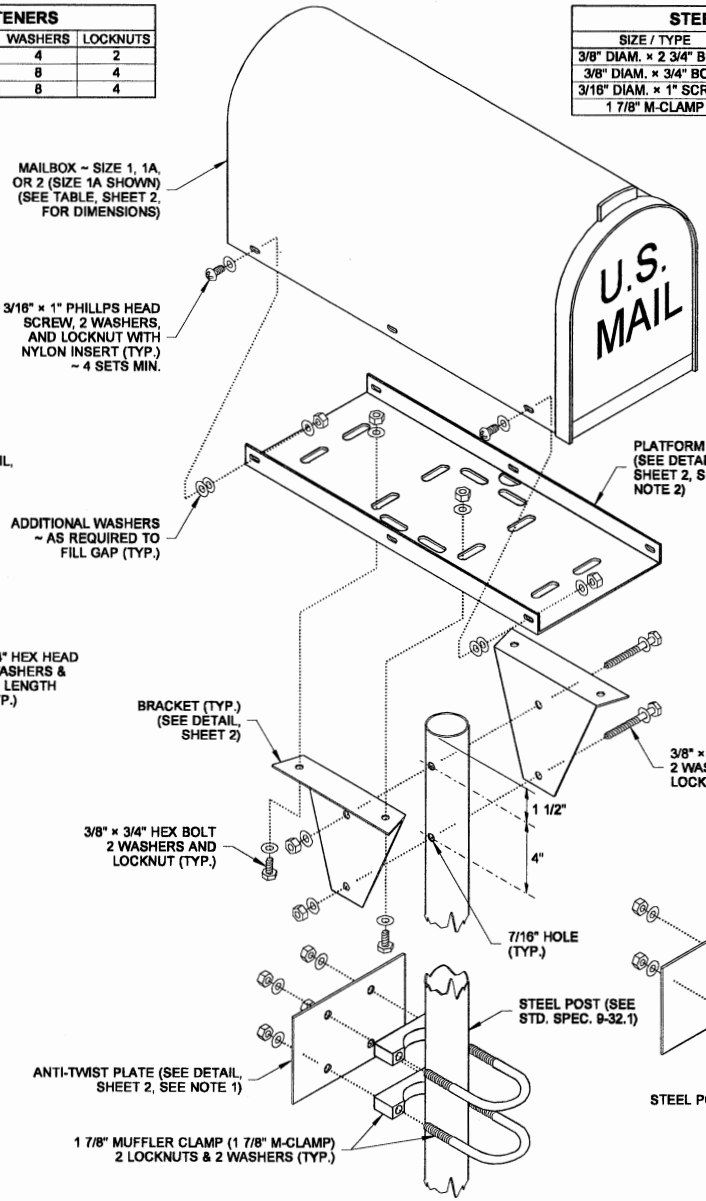

STEEL POST ASSEMBLY DETAIL

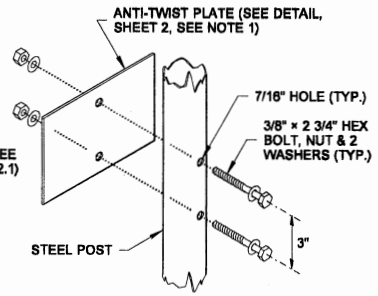

ALTERNATE ANTI-TWIST PLATE DESIGN

NOTES

1. A socket and wedge anchoring system that meets the NCHRP 350 crash test criteria may be substituted in lieu of the anti-twist plate designs shown. Anti-twist plates are not required for wood post installations.
2. The platform design shown on this plan features slots that accomodate several types of mailbox supports, only those slots necessary for assembling the type being installed are required. An adjustable platform may be used in lieu of this design, but it must fit the bracket design shown on this plan. Brackets are required for all single-post installations. Field drilling may be necessary.
3. Center the mailbox on the platform to ensure space for the mailbox door to open and to allow space for installing the fasteners (See ALIGNMENT DETAIL, Sheet 2). Spacing of mailbox mounting holes varies among manufacturers. Attachment of the mailbox to the platform may require drilling additional holes through the mailbox to fit the platform.
4. Attach a newspaper box to a steel post with two 1 7/8" Muffler Clamps spaced 4" apart. Field drill 7/16" holes in the newspaper box to fit. Use 2 1/2" × 1/4" lag bolts to attach newspaper boxes to wood posts. Newspaper boxes must not extend beyond the front of the mailbox when the mailbox door is closed.
5. A Type 2 Support (Standard Plan H-70.20) is required when 2 or more mailboxes are to be installed on one support.

NOTE: THIS PLAN IS NOT A LEGAL ENGINEERING DOCUMENT BUT AN ELECTRONIC DUPLICATE. THE ORIGINAL, SIGNED BY THE PROFESSIONAL ENGINEER, IS ON FILE AT THE WASHINGTON STATE DEPARTMENT OF TRANSPORTATION. A COPY MAY BE OBTAINED UPON REQUEST.

MAILBOX SUPPORT TYPE 1

STANDARD PLAN H-70.10-00

SHEET 1 OF 2 SHEETS

APPROVED FOR PUBLICATION

Pasco Bakotich III — STATE DESIGN ENGINEER

09-05-07 — DATE

Washington State Department of Transportation

DRAWN BY: MARK SUJKA

MAILBOX & PLATFORM DIMENSIONS						
SIZE	MAILBOX DIMENSIONS			PLATFORM DIMENSIONS		
	L	W	H	L	W	H
1	19"	6 1/2"	8 1/2"	17"	6"	1"
1A	21"	8"	10 1/2"	19"	7 1/2"	1"
2	24"	11 1/2"	13 1/2"	21"	11"	1"

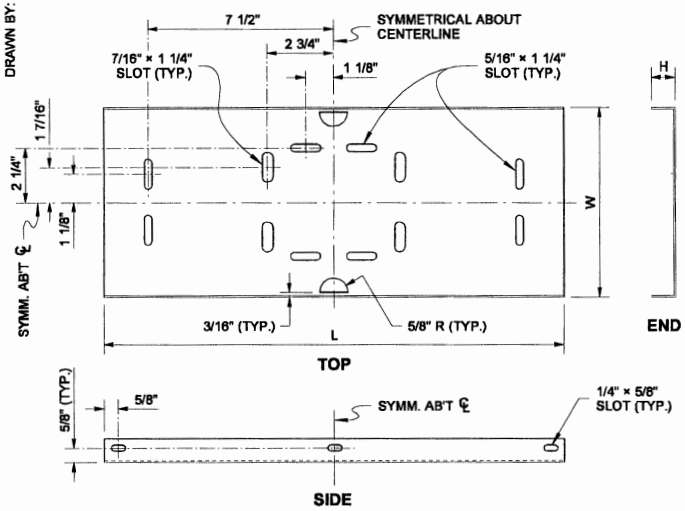

PLATFORM DETAIL

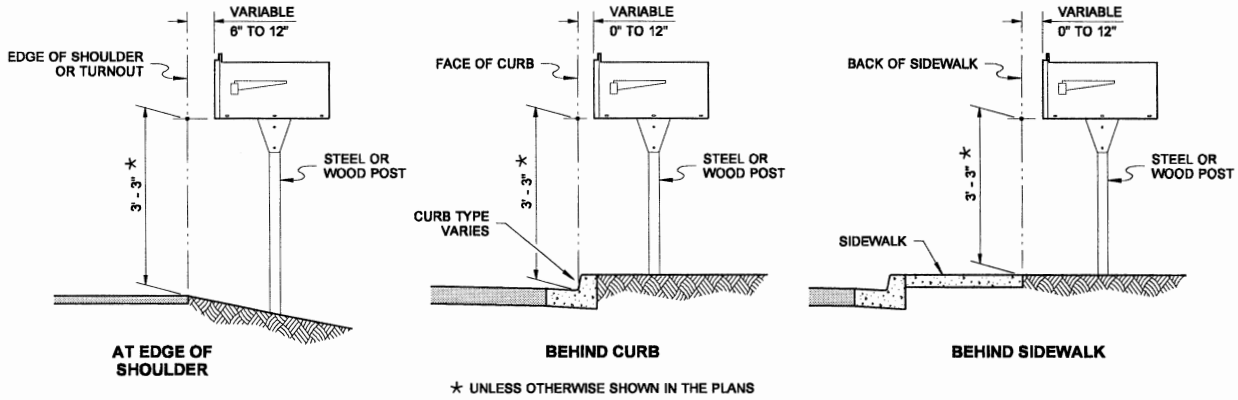

★ UNLESS OTHERWISE SHOWN IN THE PLANS

MAILBOX PLACEMENT SECTIONS

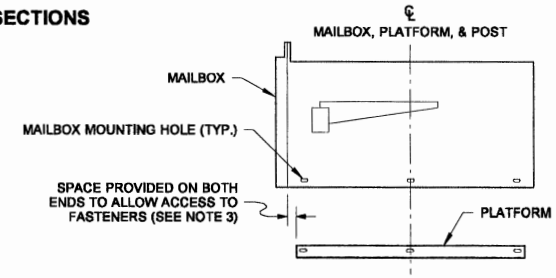

ALIGNMENT DETAIL

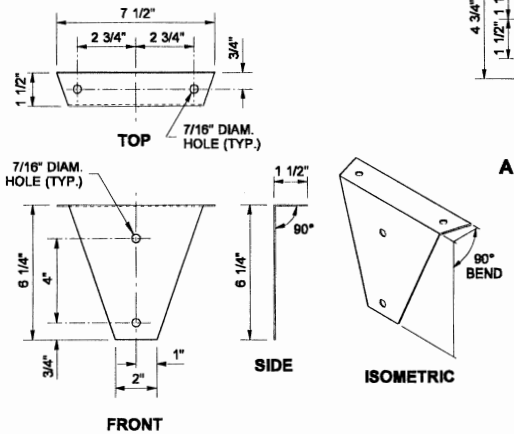

BRACKET DETAIL

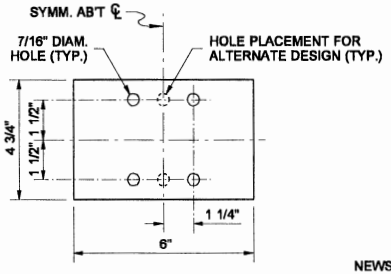

ANTI-TWIST PLATE DETAIL

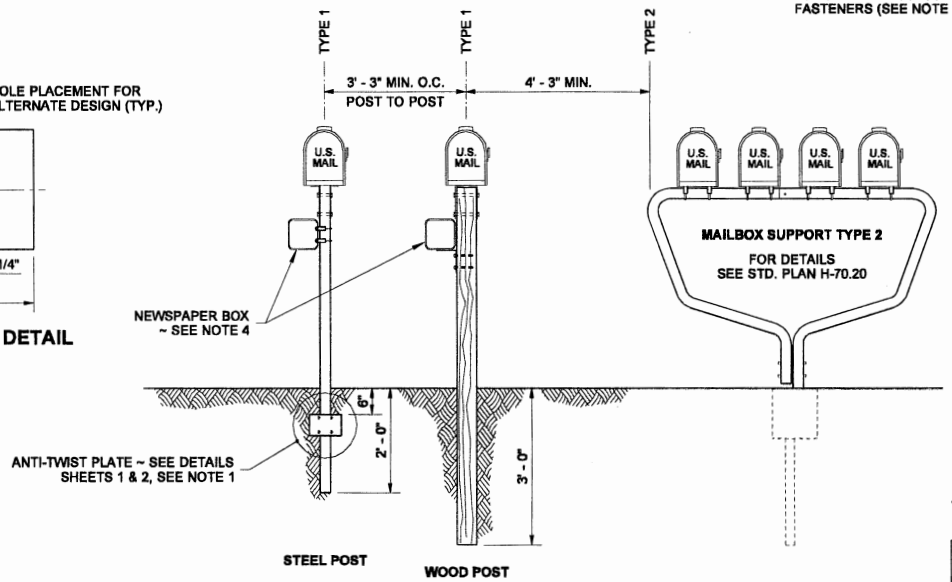

POST PLACEMENT DETAIL

NOTE: THIS PLAN IS NOT A LEGAL ENGINEERING DOCUMENT UNLESS IT BEARS THE ORIGINAL WATERMARK OF THE ENGINEER WHO APPROVED IT FOR PUBLICATION. IT IS KEPT ON FILE AT THE WASHINGTON STATE DEPARTMENT OF TRANSPORTATION. A COPY MAY BE OBTAINED UPON REQUEST.

MAILBOX SUPPORT TYPE 1

STANDARD PLAN H-70.10-00

SHEET 2 OF 2 SHEETS

APPROVED FOR PUBLICATION

Pasco Bakotich III — STATE DESIGN ENGINEER

09-05-07 — DATE

Washington State Department of Transportation

DRAWN BY: MARK SUJKA

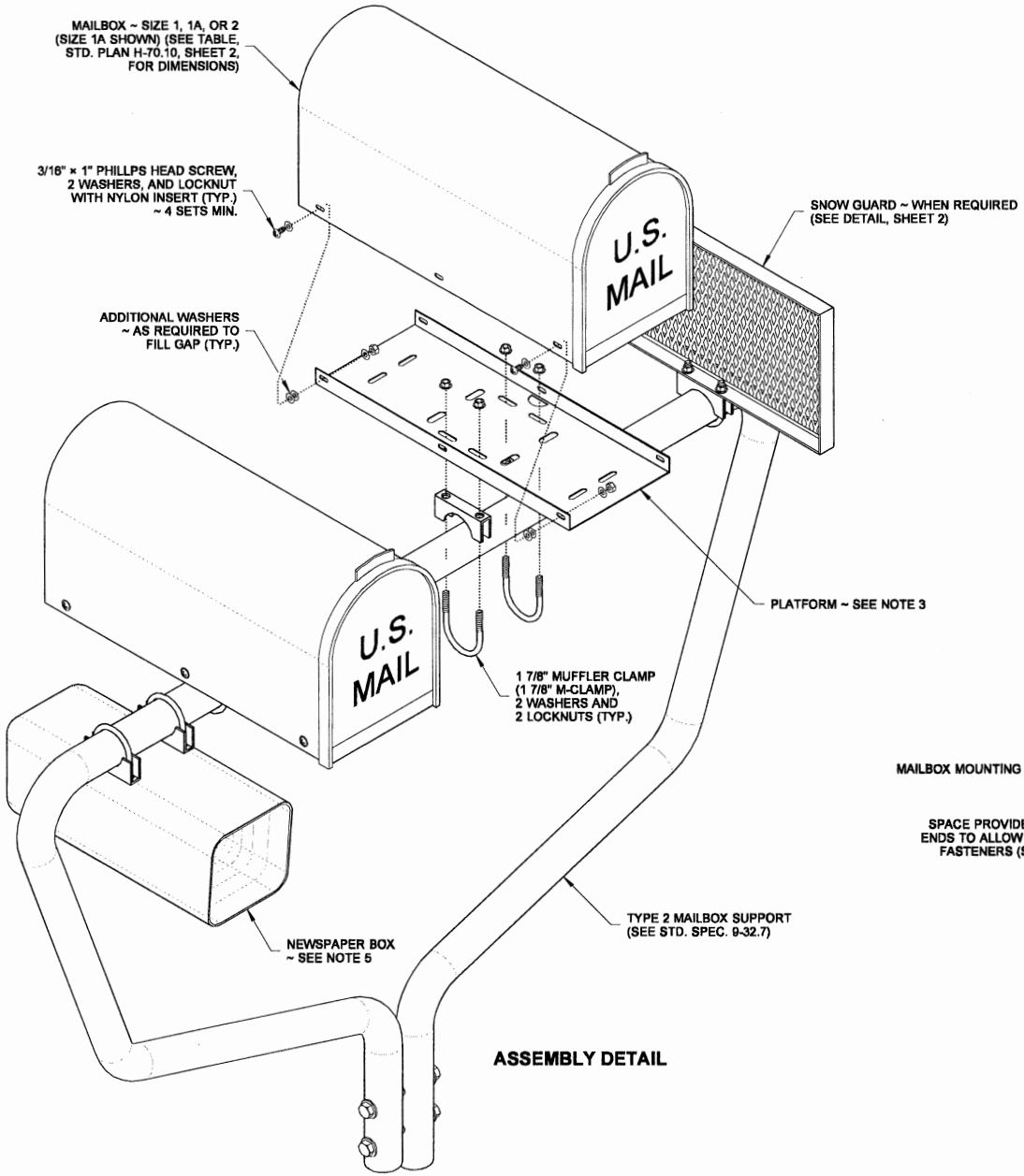

ASSEMBLY DETAIL

NOTES

1. The anchoring system shall meet NCHRP 350 crash test criteria. Use a socket and wedge system, or the anchoring system supplied by or recommended by the Type 2 Support manufacturer.
2. A maximum of 5 mailboxes may be installed on a Type 2 Support.
3. The Platform design shown in this plan is detailed in the PLATFORM DETAIL, Standard Plan H-70.10, Sheet 2. The design features slots that accomodate several types of mailbox supports; only those slots necessary for assembling the type being installed are required. An adjustable platform may be used in lieu of this platform design. Adjustable platforms must fit the 1 7/8" M-Clamp.
4. Center the mailbox on the platform to ensure space for the mailbox door to open and to allow space for installing the fasteners (See ALIGNMENT DETAIL). Spacing of mailbox mounting holes varies among manufacturers. Attachment of the mailbox to the platform may require drilling additional holes through the mailbox to fit the platform.
5. Attach a newspaper box to a Type 2 Support with two 1 7/8" Muffler Clamps spaced 4" apart. Field drill 7/16" holes in the newspaper box to fit. Newspaper boxes must not extend beyond the front of the mailbox when the mailbox door is closed.

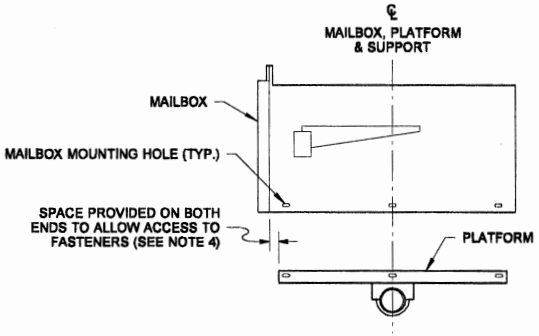

ALIGNMENT DETAIL

SEE NOTE 4

EXPIRES JUNE 19, 2008

NOTE: THIS PLAN IS NOT A LEGAL DESCRIPTIVE DOCUMENT BUT AN ELECTRONIC DUPLICATE. THE ORIGINAL, SIGNED BY THE ENGINEER AND APPROVED FOR PUBLICATION, IS KEPT ON FILE AT THE WASHINGTON STATE DEPARTMENT OF TRANSPORTATION. A COPY MAY BE OBTAINED UPON REQUEST.

MAILBOX SUPPORT TYPE 2

STANDARD PLAN H-70.20-00

SHEET 1 OF 2 SHEETS

APPROVED FOR PUBLICATION

Pasco Bakotich III — STATE DESIGN ENGINEER

09-05-07 — DATE

Washington State Department of Transportation

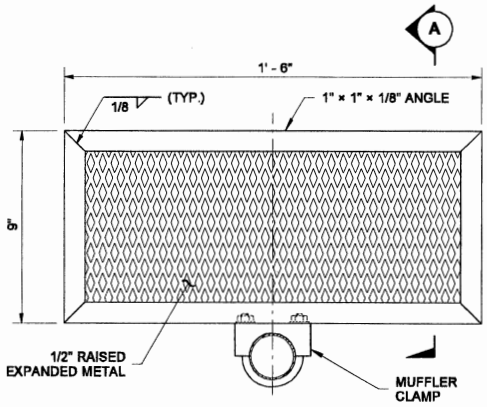

FRONT VIEW

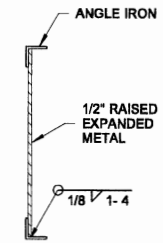

SECTION (A)

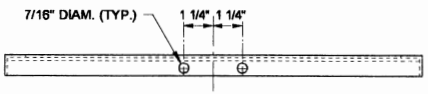

BOTTOM VIEW

SNOW GUARD DETAIL

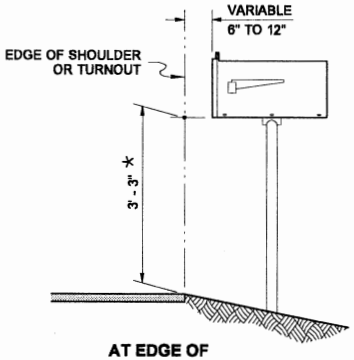

AT EDGE OF SHOULDER

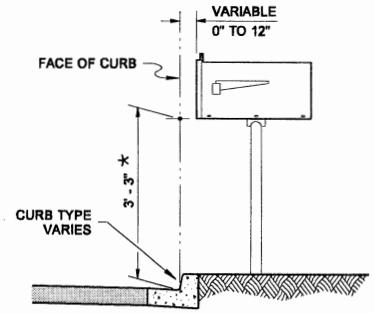

BEHIND CURB

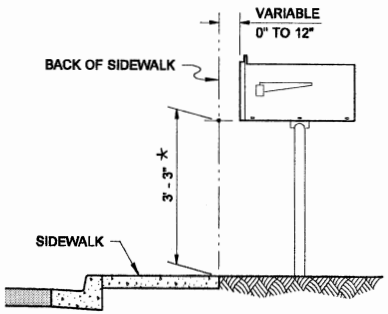

BEHIND SIDEWALK

★ UNLESS OTHERWISE SHOWN IN THE PLANS

MAILBOX PLACEMENT SECTIONS

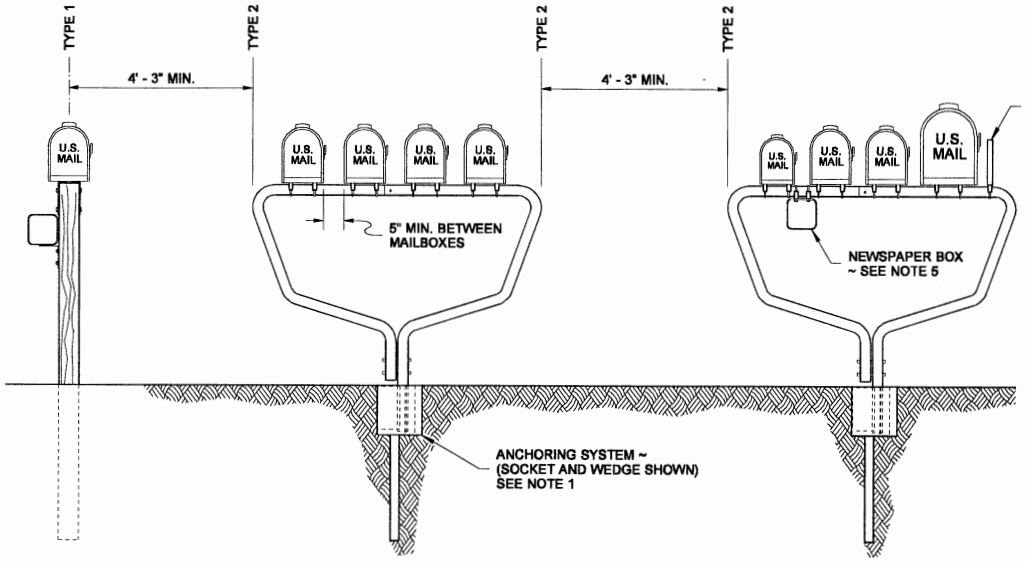

MAILBOX SUPPORT TYPE 1
(WOOD POST SHOWN)
FOR DETAILS
SEE STD. PLAN I-70.10

MAILBOX SUPPORTS TYPE 2

SPACING DETAIL

DRAWN BY: MARK SUJKA

NOTE: THIS PLAN IS NOT A LEGAL ENGINEERING DOCUMENT BUT IS REPRODUCED FROM THE ORIGINAL SIGNED BY THE ENGINEER AND APPROVED FOR PUBLICATION. SIGNED BY ON FILE AT THE WASHINGTON STATE DEPARTMENT OF TRANSPORTATION. A COPY MAY BE OBTAINED UPON REQUEST.

MAILBOX SUPPORT TYPE 2

STANDARD PLAN H-70.20-00

SHEET 2 OF 2 SHEETS

APPROVED FOR PUBLICATION

Pasco Bakotich III — STATE DESIGN ENGINEER
09-05-07 — DATE

Washington State Department of Transportation

DRAWN BY: LISA CYFORD

NOTES

1. Size the Below Inlet Grate Device (BIGD) for the storm water structure it will service.
2. The BIGD shall have a built-in high-flow relief system (overflow bypass).
3. The retrieval system must allow removal of the BIGD without spilling the collected material.
4. Perform maintenance in accordance with Standard Specification 8-01.3(15).

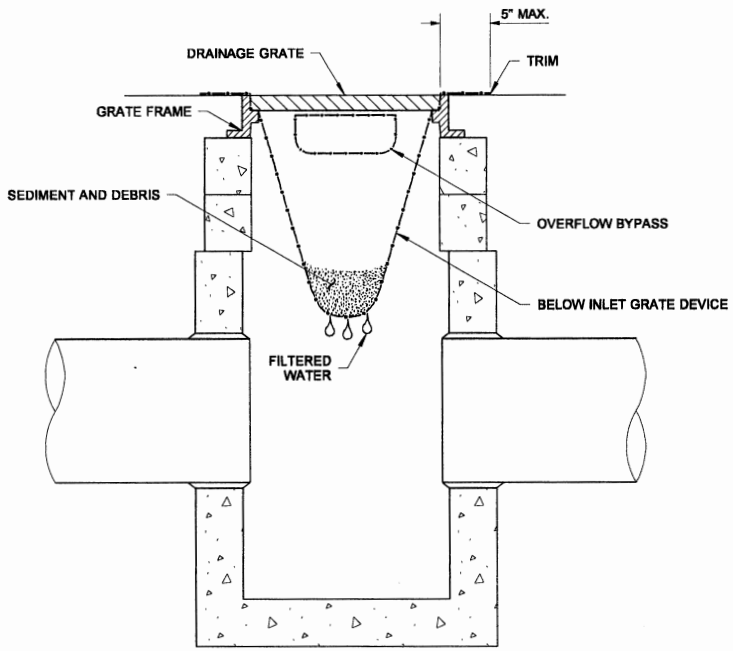

SECTION VIEW

NOT TO SCALE

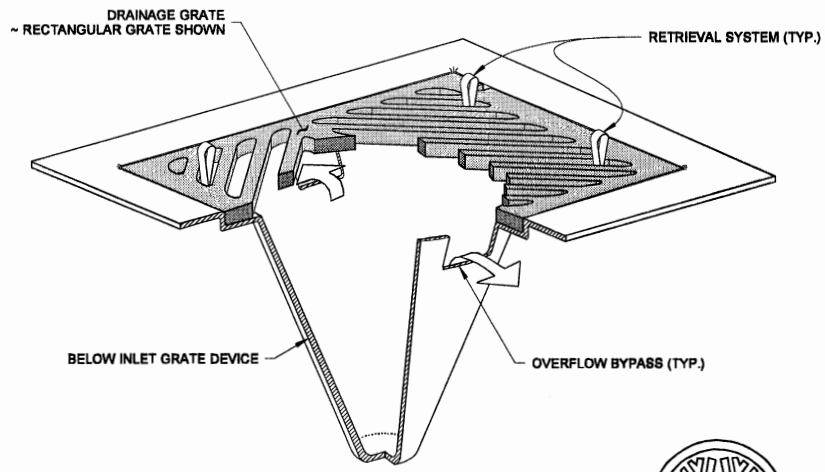

ISOMETRIC VIEW

STATE OF WASHINGTON REGISTERED LANDSCAPE ARCHITECT

MARK W. MAURER

CERTIFICATE NO. 000598

NOTE: THIS PLAN IS NOT A LEGAL ENGINEERING DOCUMENT BUT AN ELECTRONIC DUPLICATE. THE ORIGINAL, SIGNED BY THE ENGINEER AND APPROVED FOR PUBLICATION, IS KEPT ON FILE AT THE WASHINGTON STATE DEPARTMENT OF TRANSPORTATION. A COPY MAY BE OBTAINED UPON REQUEST.

STORM DRAIN INLET PROTECTION

STANDARD PLAN I-40.20-00

SHEET 1 OF 1 SHEET

APPROVED FOR PUBLICATION

Pasco Bakotich III — STATE DESIGN ENGINEER

09-20-07 — DATE

Washington State Department of Transportation

DRAWN BY: LISA CYFORD

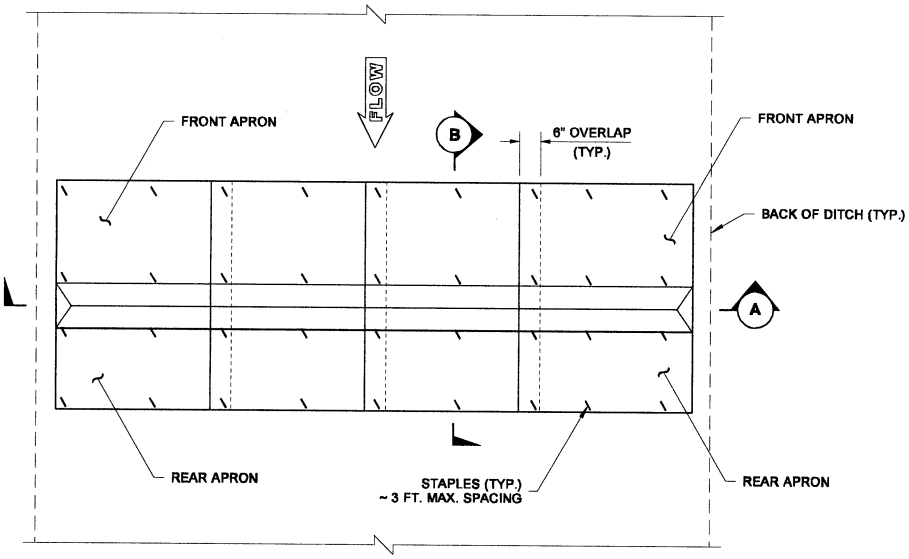

PLAN VIEW

NOTES

1. Geotextile encased Check Dams shall meet the requirements of Standard Specifications 8-01.3(6)A and 9-14.5(4).
2. Install the sloped ends of the Check Dam a minimum of 3" higher than the top of the check dam in the channel to ensure that water flows over the dam and not around it.
3. Flat bottom ditch design shown, Check Dam installation details are similar for "V" bottom ditches.
4. Perform maintenance in accordance with Standard Specifications 8-01.3(15).

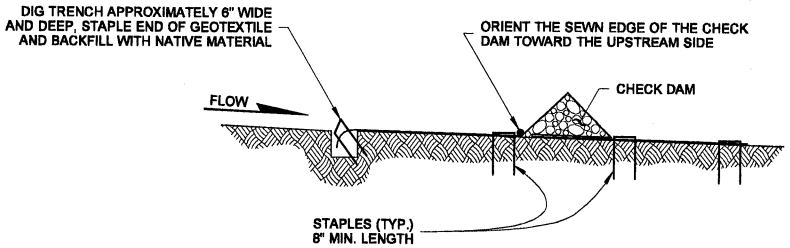

SECTION B

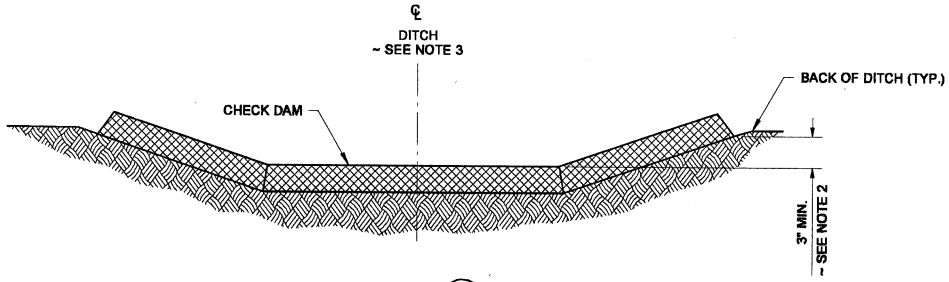

SECTION A

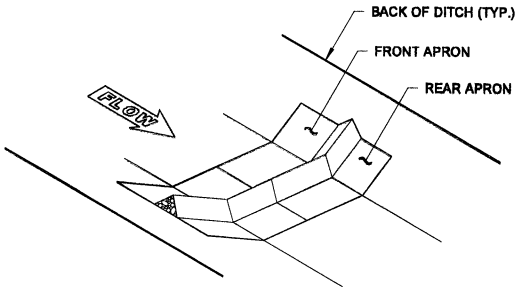

ISOMETRIC VIEW

STATE OF
WASHINGTON
REGISTERED
LANDSCAPE ARCHITECT

MARK W. MAURER
CERTIFICATE NO. 000598

NOTE: THIS PLAN IS NOT A LEGAL ENGINEERING DOCUMENT BUT AN ELECTRONIC DUPLICATE. THE ORIGINAL, SIGNED BY THE ENGINEER AND APPROVED FOR PUBLICATION, IS KEPT ON FILE AT THE WASHINGTON STATE DEPARTMENT OF TRANSPORTATION. A COPY MAY BE OBTAINED UPON REQUEST.

GEOTEXTILE ENCASED CHECK DAM INSTALLATION

STANDARD PLAN I-50.10-00

SHEET 1 OF 1 SHEET

APPROVED FOR PUBLICATION

Pasco Bakotich III — STATE DESIGN ENGINEER

09-20-07 — DATE

Washington State Department of Transportation

DRAWN BY: BILL BERENS

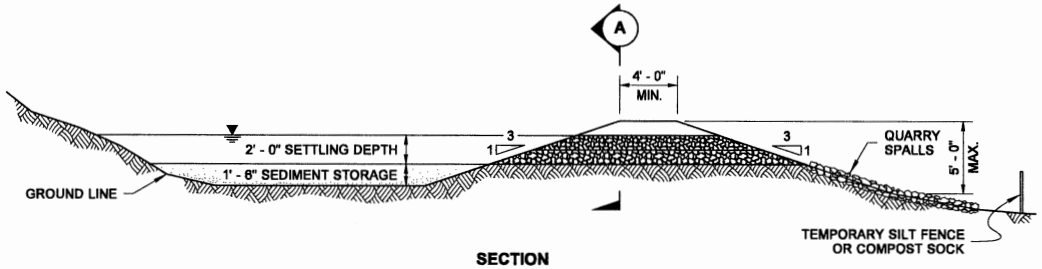

SECTION

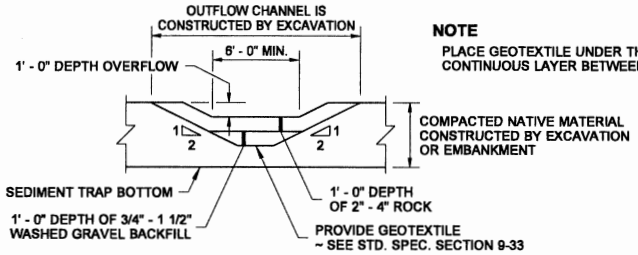

SECTION (A)

NOTE

PLACE GEOTEXTILE UNDER THE SPILLWAY AND SIDE SLOPES. PROVIDE A CONTINUOUS LAYER BETWEEN THE GRAVEL/ROCK AND THE NATIVE EARTHEN MATERIAL.

TEMPORARY SEDIMENT TRAP

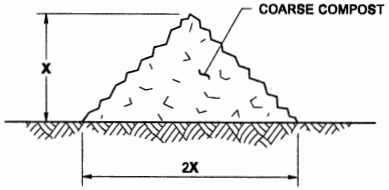

X = 1' - 0" FOR SLOPES 4H:1V OR FLATTER
X = 1' - 6" FOR SLOPES STEEPER THAN 4H:1V

TYPICAL SECTION

COMPOST BERM DETAIL

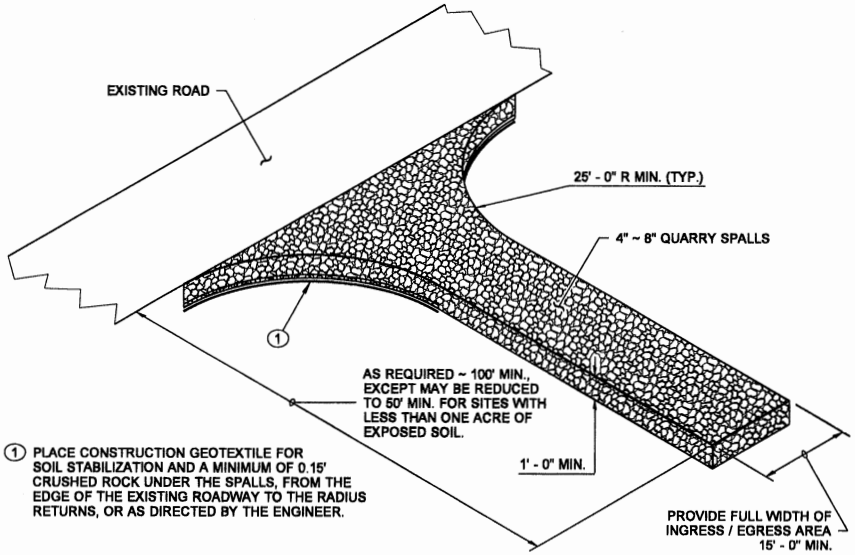

(1) PLACE CONSTRUCTION GEOTEXTILE FOR SOIL STABILIZATION AND A MINIMUM OF 0.15' CRUSHED ROCK UNDER THE SPALLS, FROM THE EDGE OF THE EXISTING ROADWAY TO THE RADIUS RETURNS, OR AS DIRECTED BY THE ENGINEER.

ISOMETRIC VIEW

STABILIZED CONSTRUCTION ENTRANCE

STATE OF
WASHINGTON
REGISTERED
LANDSCAPE ARCHITECT

MARK W. MAURER
CERTIFICATE NO. 000598

NOTE: THIS PLAN IS NOT A LEGAL ENGINEERING DOCUMENT BUT AN ELECTRONIC DUPLICATE. THE ORIGINAL, SIGNED BY THE ENGINEER AND APPROVED FOR PUBLICATION, IS KEPT ON FILE AT THE WASHINGTON STATE DEPARTMENT OF TRANSPORTATION. A COPY MAY BE OBTAINED UPON REQUEST.

MISCELLANEOUS EROSION CONTROL DETAILS

STANDARD PLAN I-80.10-01

SHEET 1 OF 1 SHEET

APPROVED FOR PUBLICATION

Pasco Bakotich III — STATE DESIGN ENGINEER
08-11-09 — DATE

Washington State Department of Transportation

DRAWN BY: LISA CYFORD

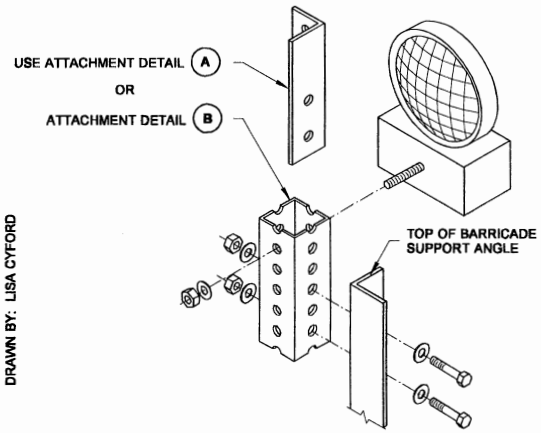

WARNING LIGHT ATTACHMENT DETAIL

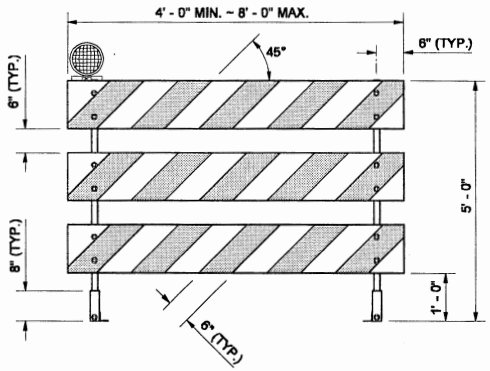

ELEVATION

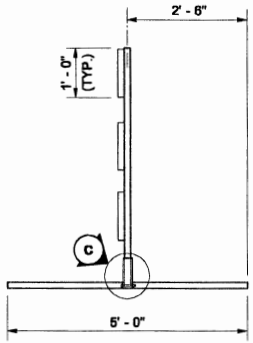

SIDE

TYPE 3 BARRICADE

NOTES

1. All fasteners may be zinc plated, galvanized or stainless steel. All steel angle and tubular steel shall be hot-rolled, high carbon steel, painted or galvanized.
2. Install one lightweight Type A Low-Intensity flashing warning light on the traffic side of the barricade. Install two Type A Low-Intensity flashing warning lights per barricade when the barricades are used to close a roadway. Attach the light to the barricade according to the light manufacturer's recommendations or use the details shown on this plan.
3. Stripes on barricade rails shall be alternating orange and white retroreflective stripes (sloping downward at an angle of 45 degrees in the direction traffic is to pass).
4. The Type 3 barricade design shown on this plan meets the crash test requirements of NCHRP 350. Alternative designs may be approved if they conform to the NCHRP 350 crash test criteria and the MUTCD.
5. When a sign is mounted on the barricade, it shall be securely bolted to at least two plywood panels. The top of the sign shall not be higher than the top panel of the barricade.
6. When sandbags are used in freezing weather, Urea fertilizer shall be mixed with the sand in a quantity to prevent the sand from freezing.

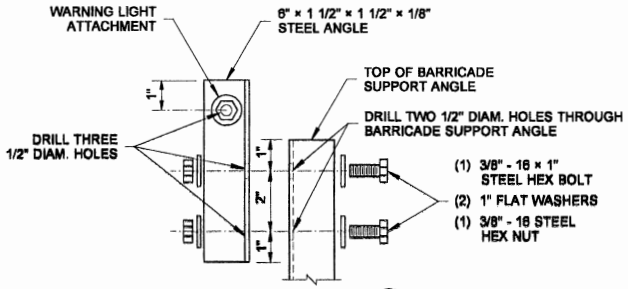

ATTACHMENT DETAIL A

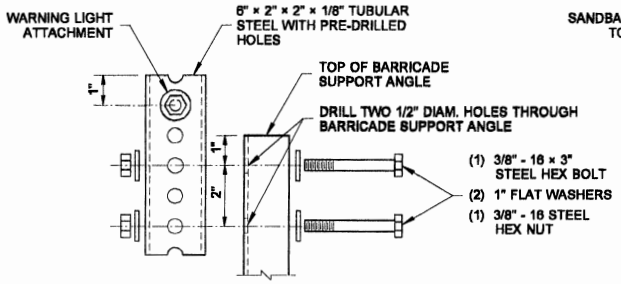

ATTACHMENT DETAIL B

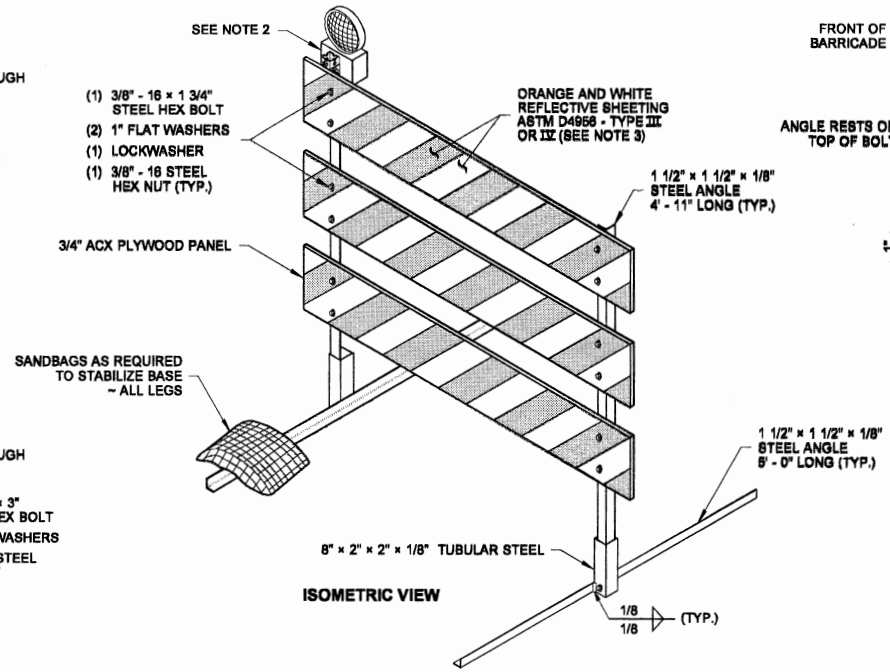

ISOMETRIC VIEW

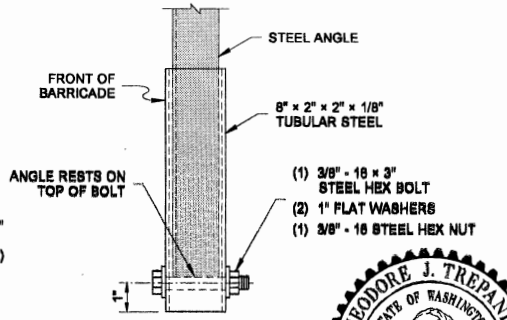

DETAIL C

NOTE: THIS PLAN IS NOT A LEGAL ENGINEERING DOCUMENT UNLESS IT BEARS THE ENGINEER'S SEAL, SIGNATURE AND DATE. THE RESULTS AND APPROVED FOR PUBLICATION, IS BEST FOR FEAT THE WASHINGTON STATE DEPARTMENT OF TRANS. PORTATION. A COPY MAY BE OBTAINED UPON REQUEST.

TYPE 3 BARRICADE

STANDARD PLAN K-80.20-00

SHEET 1 OF 2 SHEETS

APPROVED FOR PUBLICATION

Kevin J. Dayton — STATE DESIGN ENGINEER — *12-20-06* DATE

Washington State Department of Transportation

DRAWN BY: LISA CYFORD

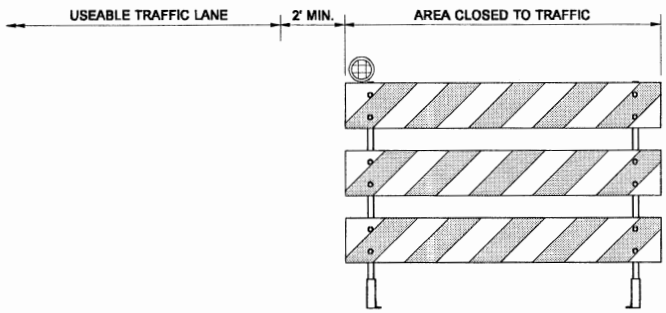

TYPE 3L BARRICADE

STRIPES ON THE BARRICADES SHALL SLOPE DOWNWARD IN THE DIRECTION TRAFFIC IS TO PASS

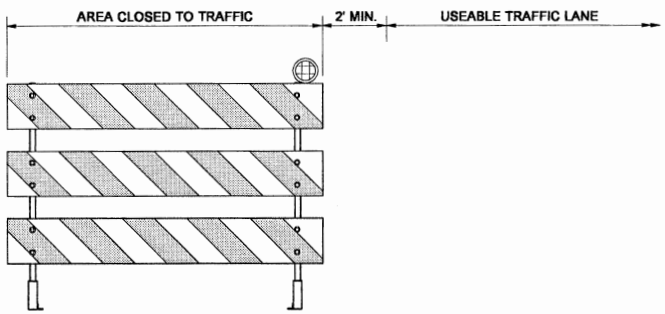

TYPE 3R BARRICADE

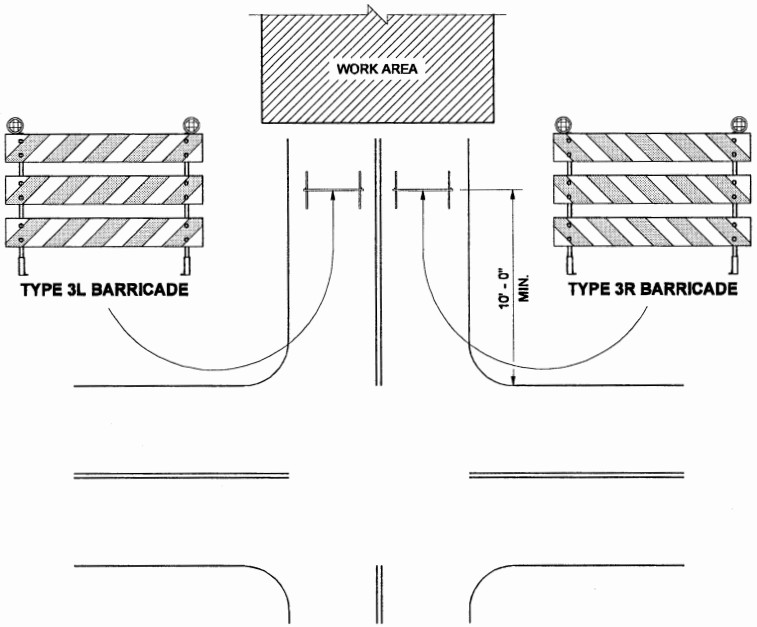

ROAD CLOSURE AT INTERSECTION

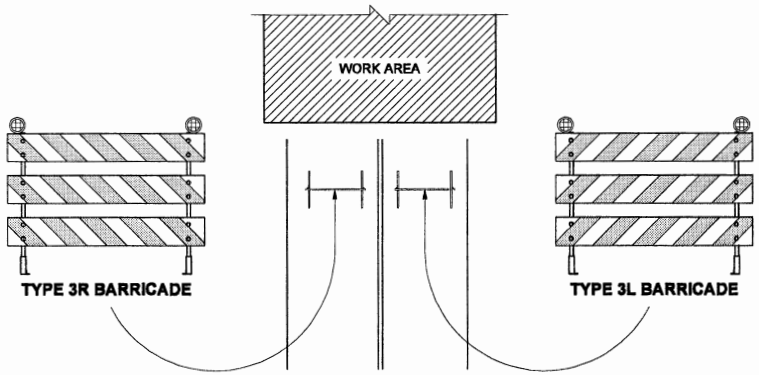

ROAD CLOSURE AT OTHER LOCATIONS

BARRICADE PLACEMENT

EXPIRES AUGUST 9, 2007

NOTE: THIS PLAN IS NOT A LEGAL ENGINEERING DOCUMENT BUT AN ELECTRONIC DUPLICATE. THE ORIGINAL, SIGNED BY THE ENGINEER, WHOSE NAME APPEARS ABOVE, IS ON FILE AT THE WASHINGTON STATE DEPARTMENT OF TRANSPORTATION. A COPY MAY BE OBTAINED UPON REQUEST.

TYPE 3 BARRICADE

STANDARD PLAN K-80.20-00

SHEET 2 OF 2 SHEETS

APPROVED FOR PUBLICATION

Kevin J. Dayton — STATE DESIGN ENGINEER

12-20-06 — DATE

Washington State Department of Transportation

DRAWN BY: FERN LIDDELL

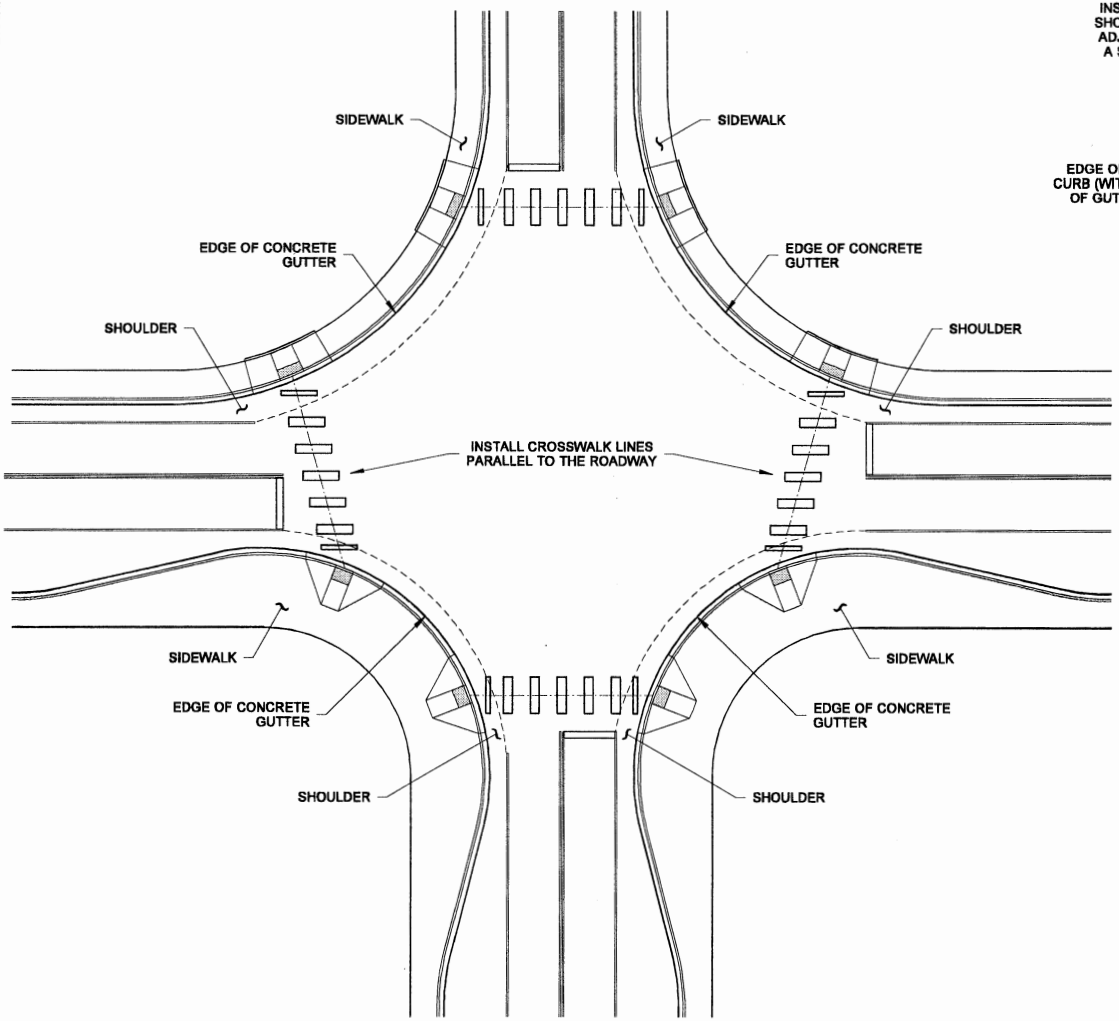

TYPICAL APPLICATIONS

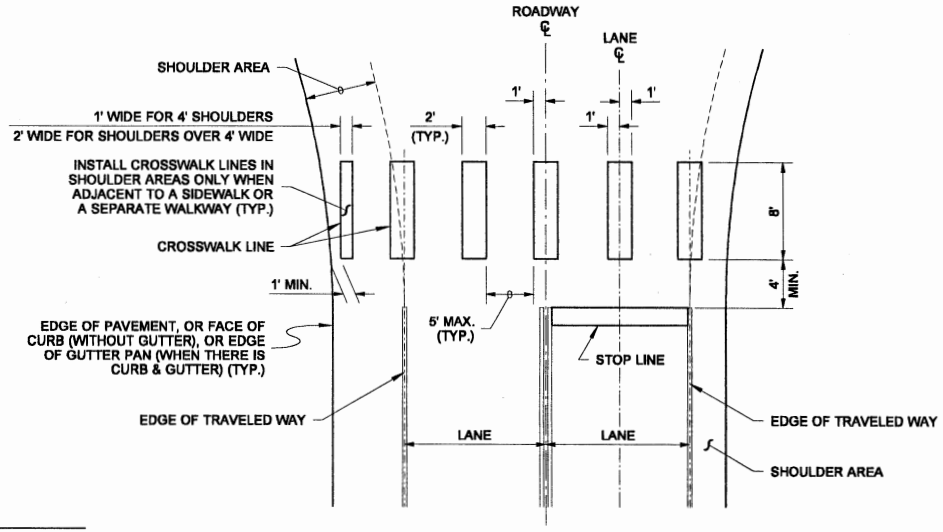

DETAIL

NOTES

1. See the Contract Plans for locations of crosswalk centerlines.
2. To the maximum extent possible, curb ramp centerline should be perpendicular to the crosswalk centerline.
3. To the maximum extent possible, crosswalks should be perpendicular to the centerline of the traveled way.

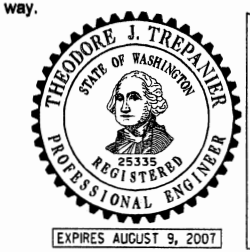

NOTE: THIS PLAN IS NOT A LEGAL ENGINEERING DOCUMENT BUT AN ELECTRONIC DUPLICATE. THE ORIGINAL, SIGNED BY THE ENGINEER, MAY BE VIEWED BY PROJECT MANAGERS ON FILE AT THE WASHINGTON STATE DEPARTMENT OF TRANSPORTATION. A COPY MAY BE OBTAINED UPON REQUEST.

CROSSWALK LAYOUT

STANDARD PLAN M-15.10-01

SHEET 1 OF 1 SHEET

APPROVED FOR PUBLICATION

Ken L. Smith — STATE DESIGN ENGINEER

02-06-07 — DATE

Washington State Department of Transportation

NOTE

Use the dimensions shown on this plan for each type Traffic Arrow being placed on roadways with a posted speed limit of 40 mph or lower.

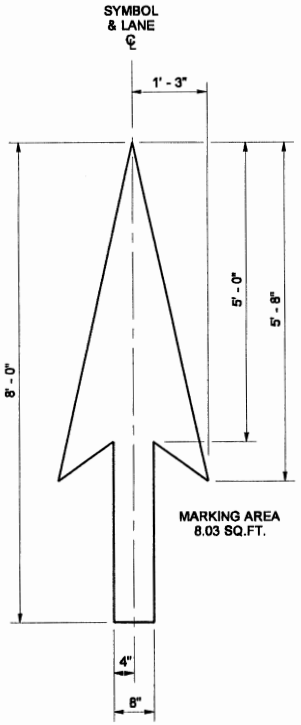

TYPE 1S TRAFFIC ARROW

TYPE 2SR (RIGHT) TRAFFIC ARROW

MIRROR IMAGE OF TYPE 2SL TRAFFIC ARROW (SHOWN AT REDUCED SCALE)

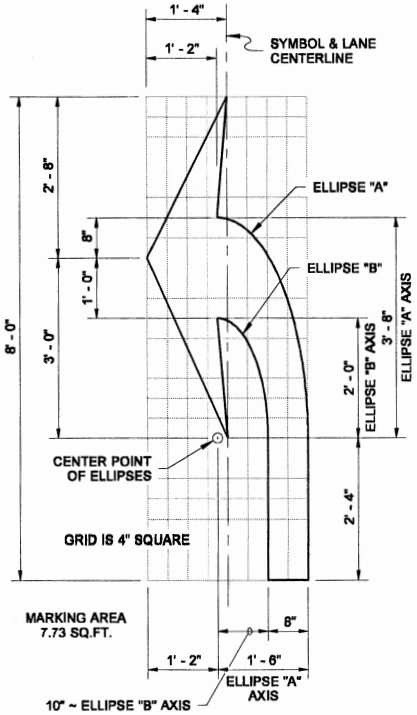

TYPE 2SL (LEFT) TRAFFIC ARROW

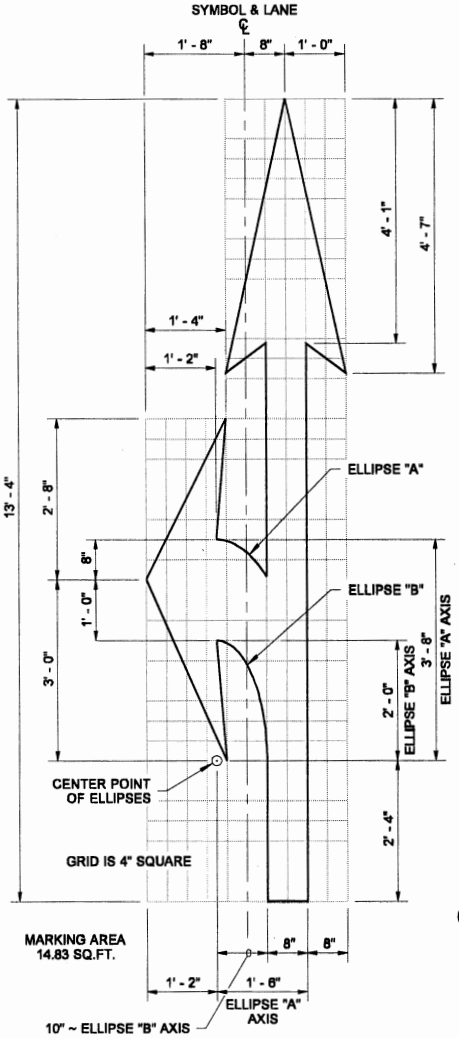

TYPE 3SL (LEFT) TRAFFIC ARROW

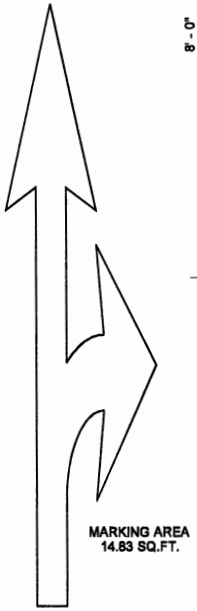

TYPE 3SR (RIGHT) TRAFFIC ARROW

MIRROR IMAGE OF TYPE 3SL TRAFFIC ARROW (SHOWN AT REDUCED SCALE)

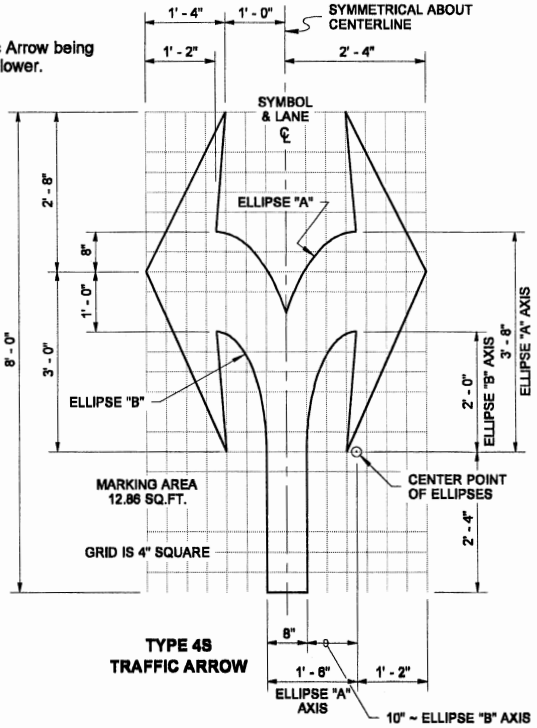

TYPE 4S TRAFFIC ARROW

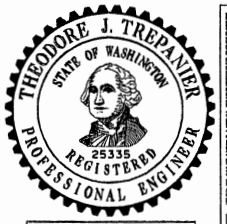

EXPIRES AUGUST 9, 2007

NOTE: THIS PLAN IS NOT A LEGAL ENGINEERING DOCUMENT BUT AN ELECTRONIC DUPLICATE. THE ORIGINAL, SIGNED BY THE ENGINEER, IS ON FILE IN THE WASHINGTON STATE DEPARTMENT OF TRANSPORTATION. A COPY MAY BE OBTAINED UPON REQUEST.

SYMBOL MARKINGS TRAFFIC ARROWS FOR LOW SPEED ROADWAYS

STANDARD PLAN M-24.40-01

SHEET 1 OF 2 SHEETS

APPROVED FOR PUBLICATION

Harold J. Peterfeso — STATE DESIGN ENGINEER — *05-31-06* — DATE

Washington State Department of Transportation

DRAWN BY: MARK SLUKA

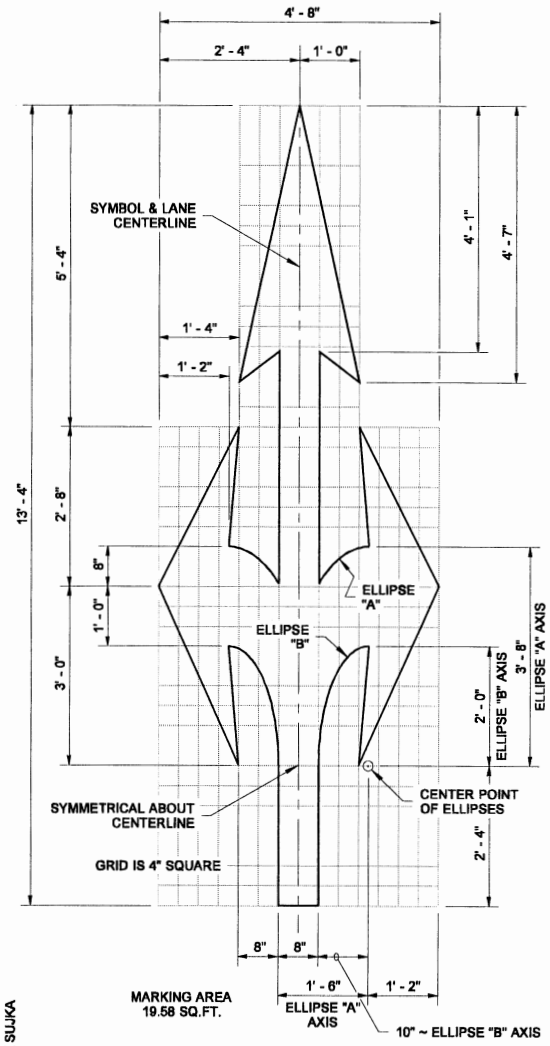

TYPE 7S TRAFFIC ARROW

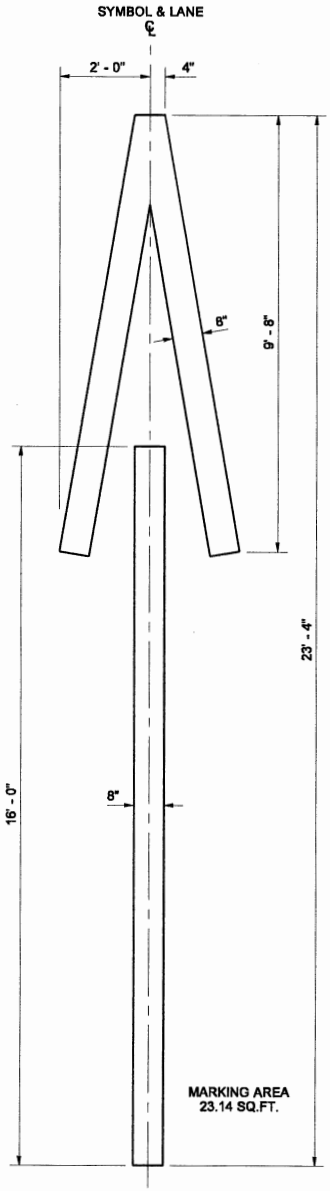

TYPE 5 TRAFFIC ARROW

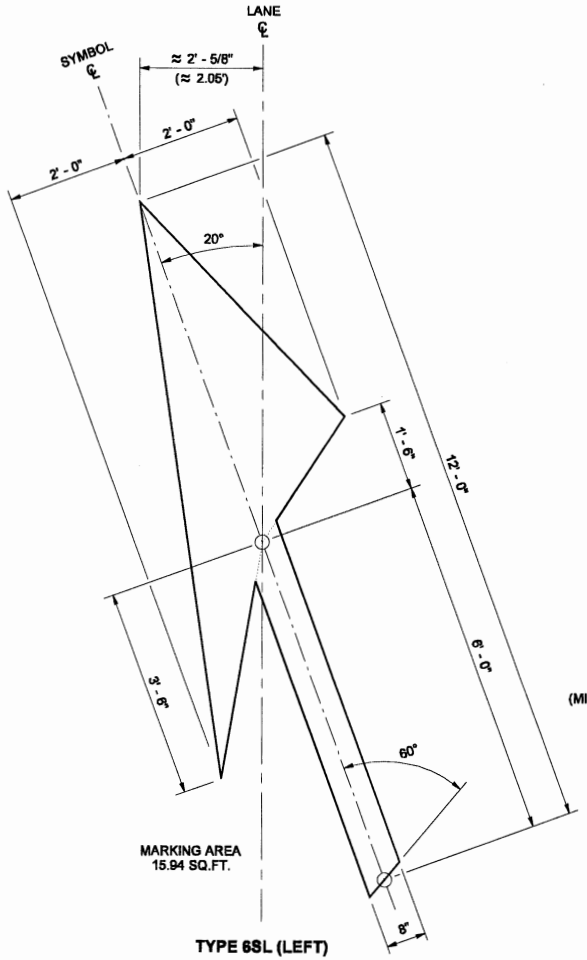

TYPE 6SL (LEFT) TRAFFIC ARROW

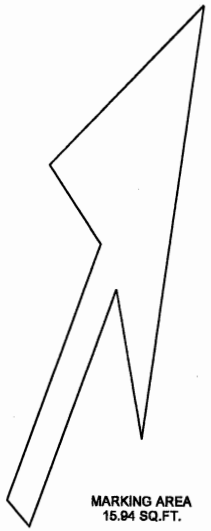

TYPE 6SR (RIGHT) TRAFFIC ARROW

MIRROR IMAGE OF TYPE 6SL
(MIRRORED ABOUT LANE CENTERLINE)
(SHOWN AT REDUCED SCALE)

EXPIRES AUGUST 9, 2007

NOTE: THIS PLAN IS NOT A LEGAL ENGINEERING DOCUMENT NOR IS IT REPRODUCIBLE. THE ORIGINAL, SEALED & SIGNED BY THE ENGINEER AND APPROVED FOR PUBLICATION, IS KEPT ON FILE AT THE WASHINGTON STATE DEPARTMENT OF TRANSPORTATION. A COPY MAY BE OBTAINED UPON REQUEST.

SYMBOL MARKINGS TRAFFIC ARROWS FOR LOW SPEED ROADWAYS

STANDARD PLAN M-24.40-01

SHEET 2 OF 2 SHEETS

APPROVED FOR PUBLICATION

Harold J. Peterfeso — STATE DESIGN ENGINEER — *05-31-06* — DATE

Washington State Department of Transportation

DRAWN BY: MARK SUJKA

DRAWN BY: LISA CYFORD

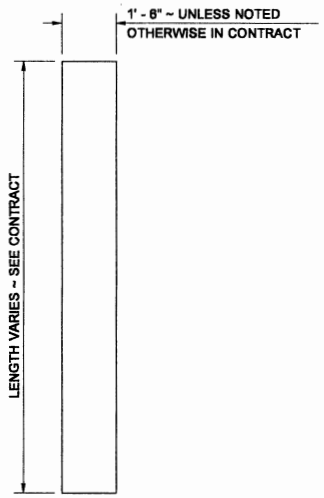

STOP LINE

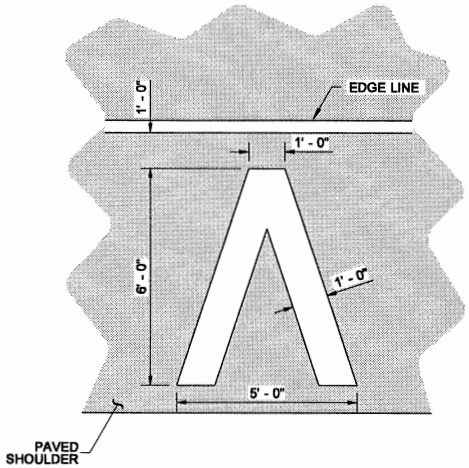

MARKING AREA = 11.73 SQ.FT.

HALF-MILE MARKER

NOTES

1. If Rumble Strips are present, install marking outside of the Rumble Strip.

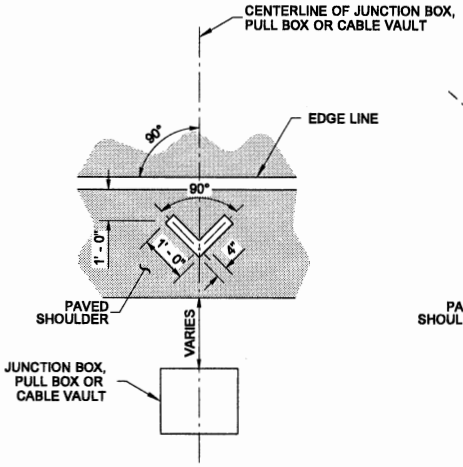

MARKING AREA = 0.56 SQ. FT.

JUNCTION BOX, PULL BOX, OR CABLE VAULT MARKINGS

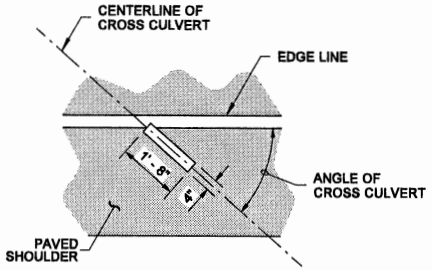

MARKING AREA = 0.56 SQ.FT.

CROSS CULVERT

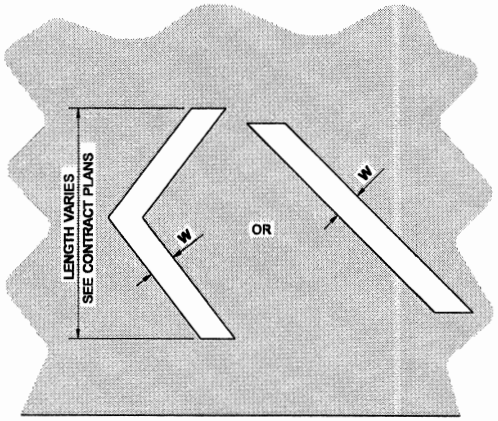

WHITE OR YELLOW ~ SEE CONTRACT PLANS

CHEVRON OR DIAGONAL

CROSSHATCH MARKING

W = 8" FOR POSTED SPEED LIMIT OF 40 MPH OR LOWER
W = 12" FOR POSTED SPEED LIMIT OF 45 MPH OR HIGHER

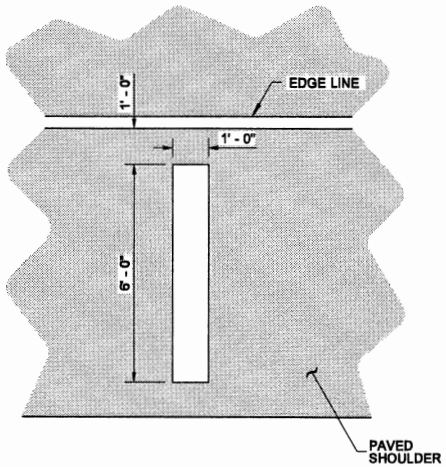

MARKING AREA = 6.00 SQ.FT.

FULL MILE MARKER

AERIAL SURVEILLANCE MARKERS

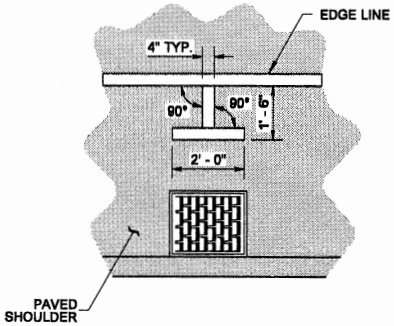

MARKING AREA = 1.06 SQ.FT.

DRAINAGE STRUCTURE INLET

DRAINAGE MARKING

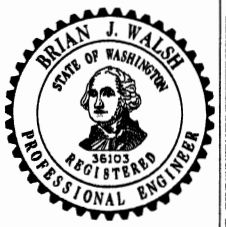

NOTE: THIS PLAN IS NOT A LEGAL ENGINEERING DOCUMENT UNLESS IT BEARS THE ENGINEER'S SEAL AND SIGNATURE. THE ORIGINAL OF THE ENGINEER AND APPROVED OR REVISED PLANS, IS KEPT ON FILE AT THE WASHINGTON STATE DEPARTMENT OF TRANSPORTATION. A COPY MAY BE OBTAINED UPON REQUEST.

SYMBOL MARKINGS MISCELLANEOUS

STANDARD PLAN M-24.60-03

SHEET 1 OF 2 SHEETS

APPROVED FOR PUBLICATION

Pasco Bakotich III — STATE DESIGN ENGINEER

05-11-11 — DATE

Washington State Department of Transportation

DRAWN BY: LISA CYFORD

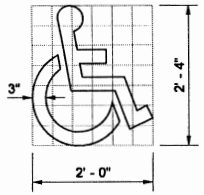

GRID IS 4" SQUARE MARKING AREA = 1.41 SQ.FT.

ACCESS PARKING SPACE SYMBOL (MINIMUM)

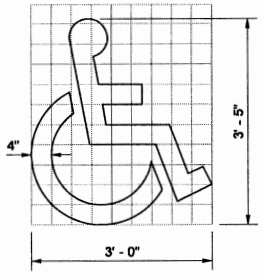

GRID IS 4" SQUARE MARKING AREA = 3.09 SQ.FT.

ACCESS PARKING SPACE SYMBOL (STANDARD)

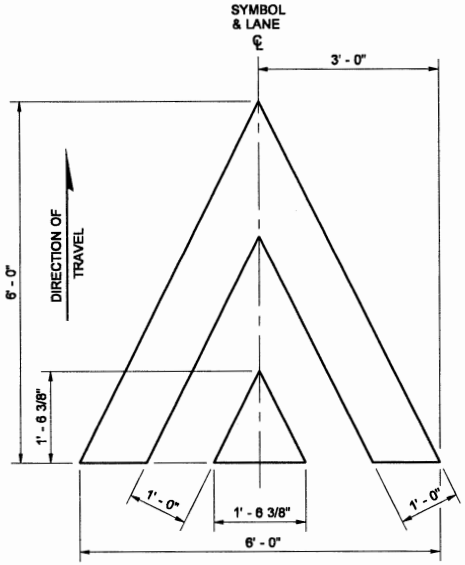

MARKING AREA = 12.08 SQ.FT.

SPEED BUMP SYMBOL

SYMBOL MARKING		A	B	C	D	USE	MARKING AREA
YIELD AHEAD SYMBOL	TYPE 1	6' - 0"	2' - 6"	13' - 0"	N/A	LESS THAN 45 MPH	25.90 SQ.FT.
	TYPE 2	6' - 0"	3' - 0"	20' - 0"	N/A	45 MPH OR GREATER	36.54 SQ.FT.
YIELD LINE SYMBOL	TYPE 1	1' - 0"	6"	1' - 6"	6"	LESS THAN 45 MPH	0.75 SQ.FT.
	TYPE 2	2' - 0"	1' - 0"	3' - 0"	1' - 0"	45 MPH OR GREATER	3.00 SQ.FT.
	TYPE 2	2' - 0"	1' - 0"	3' - 0"	1' - 0"	ROUNDABOUT ENTRY *	3.00 SQ.FT.

* MINIMUM OF 4 IN LANE

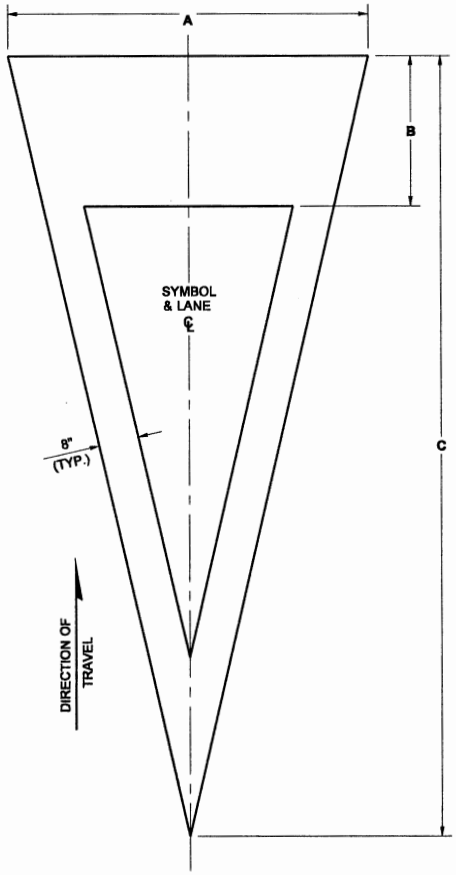

YIELD AHEAD SYMBOL

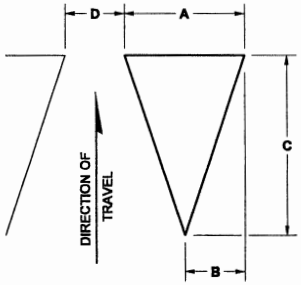

YIELD LINE SYMBOL
(MULTIPLE SYMBOLS REQUIRED FOR TRANSVERSE YIELD LINE ~ SEE CONTRACT)

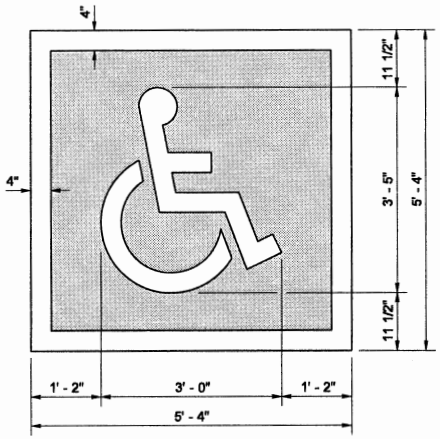

TOTAL MARKING AREA = 28.44 SQ.FT.
WHITE = 9.76 SQ.FT. BLUE = 18.69 SQ.FT.

ACCESS PARKING SPACE SYMBOL (STANDARD)
WITH BLUE BACKGROUND AND WHITE BORDER
(REQUIRED FOR CEMENT CONCRETE SURFACES)

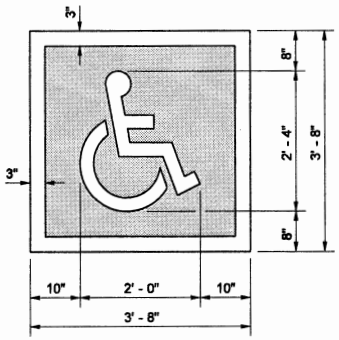

TOTAL MARKING AREA = 13.44 SQ.FT.
WHITE = 4.82 SQ.FT. BLUE = 8.62 SQ.FT.

ACCESS PARKING SPACE SYMBOL (MINIMUM)
WITH BLUE BACKGROUND AND WHITE BORDER
(REQUIRED FOR CEMENT CONCRETE SURFACES)

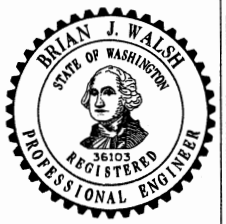

NOTE: THIS PLAN IS NOT A LEGAL ENGINEERING DOCUMENT BUT AN ELECTRONIC DUPLICATE. THE ORIGINAL, SIGNED BY THE ENGINEER, AND SEALED, WITH ORIGINAL SEAL, IS ON FILE AT THE WASHINGTON STATE DEPARTMENT OF TRANSPORTATION. A COPY MAY BE OBTAINED UPON REQUEST.

SYMBOL MARKINGS MISCELLANEOUS

STANDARD PLAN M-24.60-03

SHEET 2 OF 2 SHEETS

APPROVED FOR PUBLICATION

Pasco Bakotich III — STATE DESIGN ENGINEER
05-11-11 — DATE

Washington State Department of Transportation

DRAWN BY: LISA CYFORD

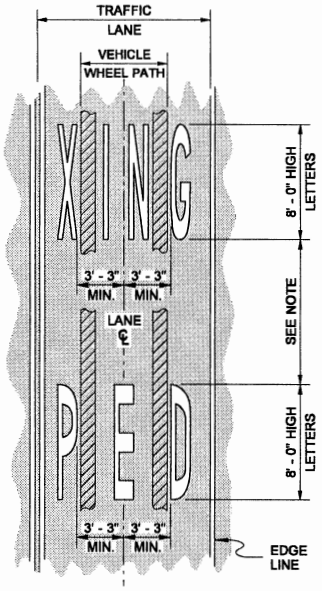

HIGH-SPEED APPLICATION

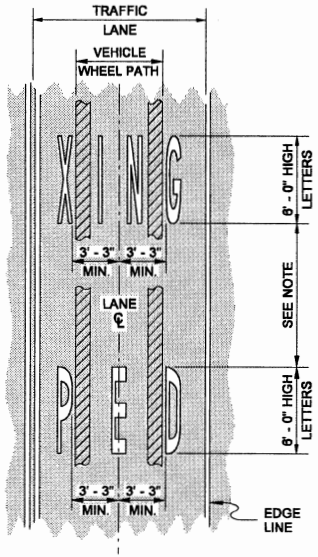

LOW-SPEED APPLICATION

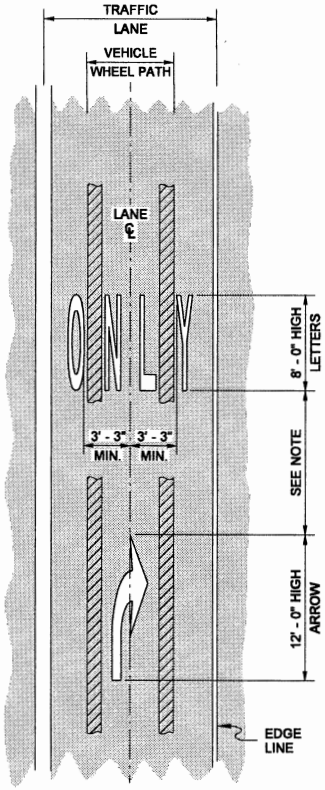

HIGH-SPEED APPLICATION

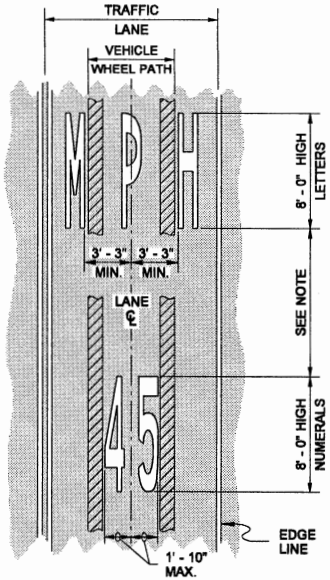

HIGH-SPEED APPLICATION

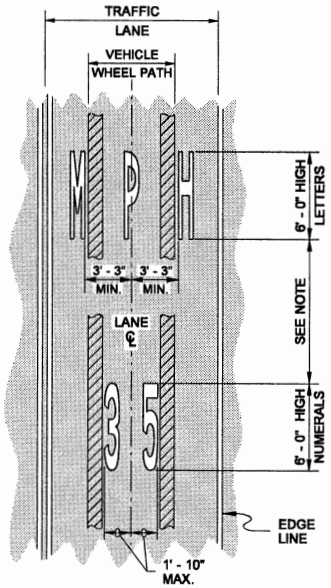

LOW-SPEED APPLICATION

NOTE

1. Typically, four times the letter or numeral height ~ minimum, up to ten times ~ maximum, or according to Plans.

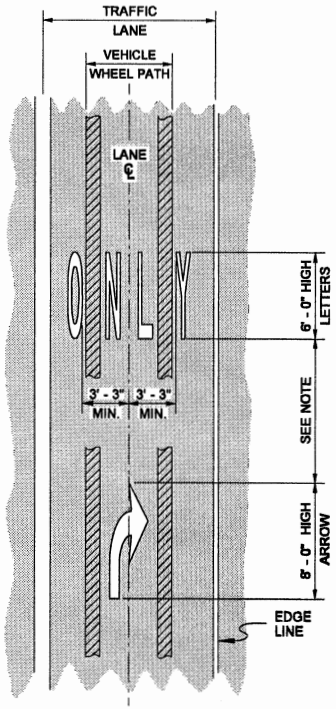

LOW-SPEED APPLICATION

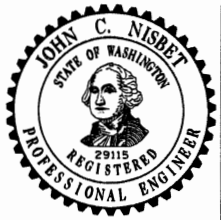

NOTE: THIS PLAN IS NOT A LEGAL ENGINEERING DOCUMENT BUT AN ELECTRONIC DUPLICATE. THE ORIGINAL, SIGNED BY THE ENGINEER, WAS PREPARED IN ACCORDANCE WITH WAC 196-23-020 AND IS ON FILE AT THE WASHINGTON STATE DEPARTMENT OF TRANSPORTATION. A COPY MAY BE OBTAINED UPON REQUEST.

TRAFFIC LETTER AND NUMERAL APPLICATIONS

STANDARD PLAN M-80.10-01

SHEET 1 OF 2 SHEETS

APPROVED FOR PUBLICATION

Pasco Bakotich III — STATE DESIGN ENGINEER

06-03-11 — DATE

Washington State Department of Transportation

DRAWN BY: LISA CYFORD

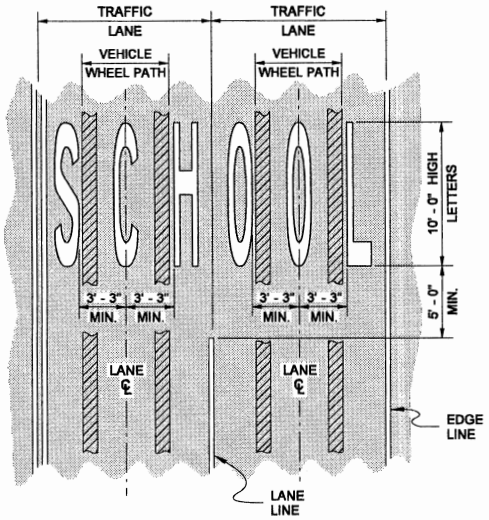

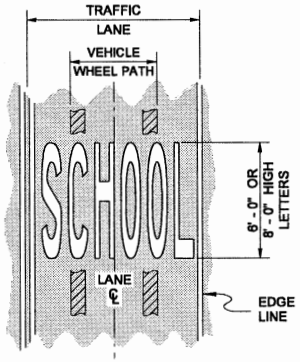

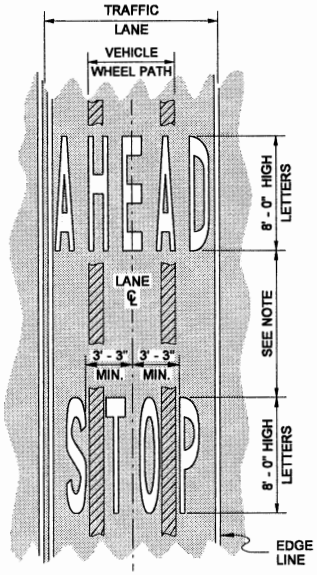

HIGH-SPEED APPLICATION

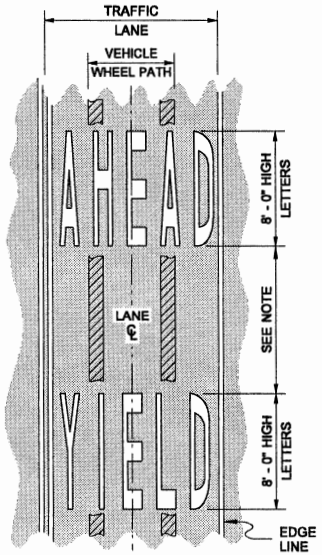

HIGH-SPEED APPLICATION

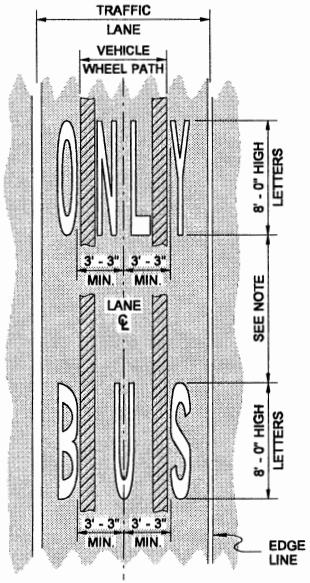

HIGH-SPEED APPLICATION

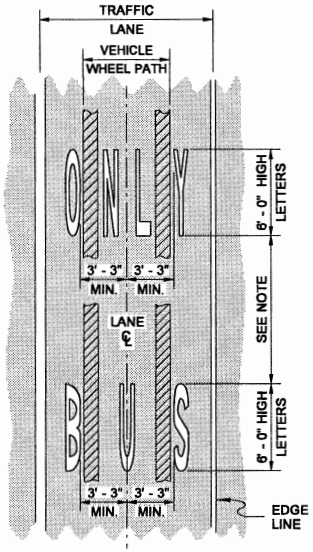

LOW-SPEED APPLICATION

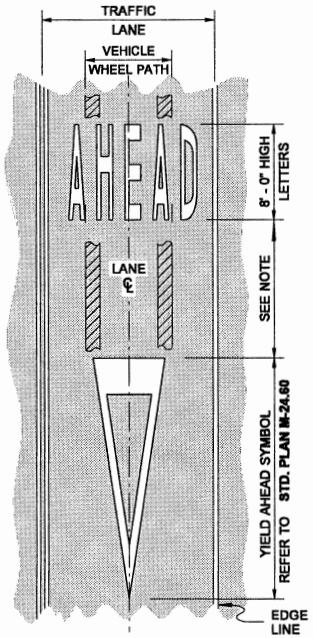

HIGH-SPEED APPLICATION

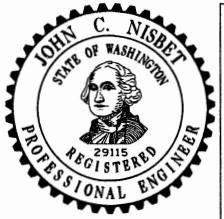

NOTE: THIS PLAN IS NOT A LEGAL ENGINEERING DOCUMENT BUT AN ELECTRONIC DUPLICATE. THE ORIGINAL, SIGNED BY THE WASHINGTON STATE REGISTERED PROFESSIONAL ENGINEER, IS FILED AT THE WASHINGTON STATE DEPARTMENT OF TRANSPORTATION. A COPY MAY BE OBTAINED UPON REQUEST.

TRAFFIC LETTER AND NUMERAL APPLICATIONS

STANDARD PLAN M-80.10-01

SHEET 2 OF 2 SHEETS

APPROVED FOR PUBLICATION

Pasco Bakotich III — STATE DESIGN ENGINEER

06-03-11 — DATE

Washington State Department of Transportation

DRAWN BY: FERN LIDDELL

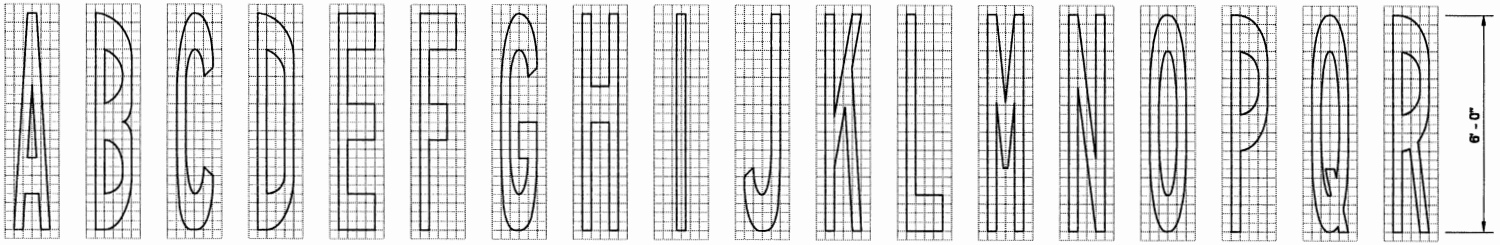

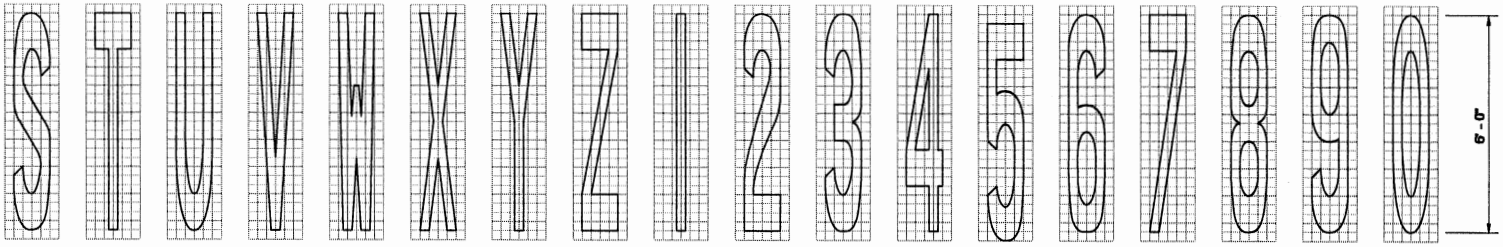

SIX FOOT HIGH LETTERS AND NUMERALS SHOWN ON A THREE -INCH SQUARE GRID

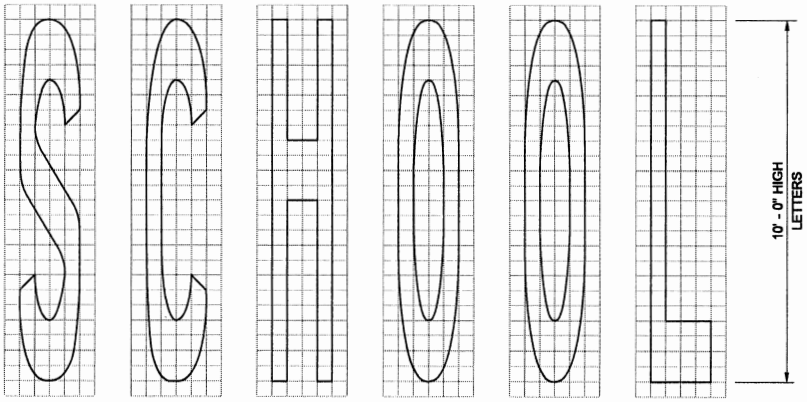

TEN FOOT HIGH LETTERS SHOWN ON A FIVE- INCH SQUARE GRID

FOR USE ON ROADWAYS WITH A POSTED SPEED OF 40 MPH OR LESS

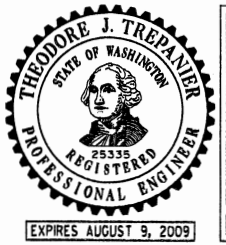

NOTE: THIS PLAN IS NOT A LEGAL ENGINEERING DOCUMENT BUT AN ELECTRONIC DUPLICATE. THE ORIGINAL, SIGNED BY THE ENGINEER AND APPROVED FOR PUBLICATION, IS KEPT ON FILE AT THE WASHINGTON STATE DEPARTMENT OF TRANSPORTATION. A COPY MAY BE OBTAINED UPON REQUEST.

TRAFFIC LETTERS AND NUMERALS (LOW SPEED ROADWAYS) STANDARD PLAN M-80.30-00

SHEET 1 OF 1 SHEET

APPROVED FOR PUBLICATION

Pasco Bakotich III — STATE DESIGN ENGINEER

06-10-08 — DATE

Washington State Department of Transportation

DRAWN BY: MARK SUJKA

NOTE

See Standard Plan M-40.10 for Guide Post details.

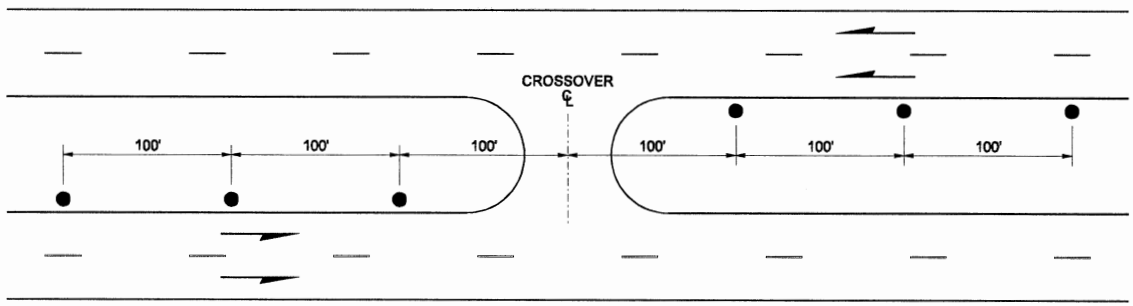

MEDIAN CROSSOVERS

LEGEND
○ TYPE W
● TYPE Y

SEE TYPE DEFINITIONS, STD. PLAN M-40.10

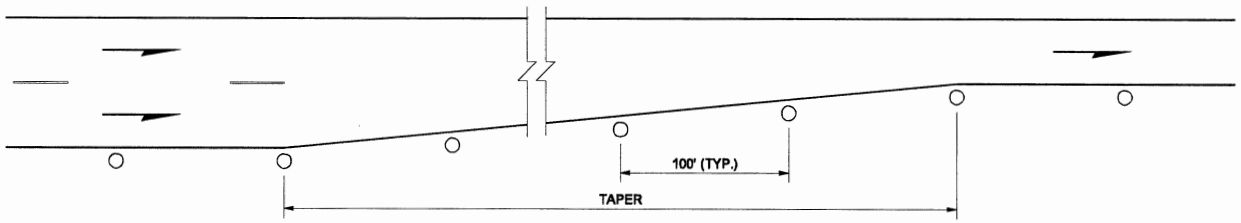

LANE REDUCTIONS

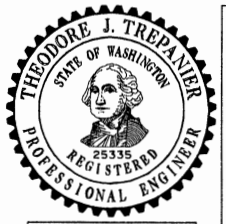

EXPIRES AUGUST 9, 2009

NOTE: THIS PLAN IS NOT A LEGAL ENGINEERING DOCUMENT BUT AN ELECTRONIC DUPLICATE. THE ORIGINAL, SIGNED BY THE ENGINEER AND APPROVED FOR PUBLICATION, IS KEPT ON FILE AT THE WASHINGTON STATE DEPARTMENT OF TRANSPORTATION. A COPY MAY BE OBTAINED UPON REQUEST.

GUIDE POST PLACEMENT MISCELLANEOUS

STANDARD PLAN M-40.60-00

SHEET 1 OF 1 SHEET

APPROVED FOR PUBLICATION

Pasco Bakotich III — STATE DESIGN ENGINEER

09-20-07 — DATE

Washington State Department of Transportation

APPENDIX F
AGC AGREEMENT
(This Page Intentionally Left Blank)

AGC – WSDOT
SUPPLEMENTAL EQUIPMENT RENTAL AGREEMENT

Effective Dates: October 1, 2008 until January 15, 2009

It is mutually agreed by the parties to this agreement that rental rates to be paid Contractors for equipment used on force account will be established in accordance with Section 1-09.6 of the Standard Specifications, the AGC-WSDOT Equipment Rental Agreement Effective May 1, 2007, and this Supplemental Agreement.

This Supplemental Equipment Rental Agreement modifies the AGC-WSDOT Equipment Rental Agreement Effective May 1, 2007 as described below.

2. Rental Rate, paragraph c. is revised to read:

c. The hourly operating cost for each hour that the equipment is in use. "In use" shall mean that the presence of the equipment is necessary for the operation and that the equipment is present and is not being used for other activities while the force account work is underway. Under these circumstances, the equipment shall be paid at its hourly rate plus 1.07 times the hourly operating cost.

4. Rental Equipment, the first paragraph is revised to read:

If Contractor-owned equipment is not reasonably available, the Engineer may approve the use of operated or non-operated rental equipment. Operated equipment shall be considered a "service" and shall be compensated according to section 4 of the force account specifications. Non-operated equipment shall be compensated according to the provisions for rented equipment in section 3 of the force account specifications. If the invoice costs of non-operated equipment do not specifically say that fuel is included, then 1.07 times the Rental Rate Blue Book Hourly Operating Cost shall be added for each hour the equipment operates.

This Supplemental Equipment Rental Agreement is issued after conference among representatives of the Associated General Contractors of Washington and the Washington State Department of Transportation and has the approval of both.

Associated General Contractors of Washington

Van Collins
Legislative Council

Washington State Department of Transportation

Linea Laird, P.E.
State Construction Engineer

AGC – WSDOT
EQUIPMENT RENTAL AGREEMENT

Effective Date: May 1, 2007 Until Further Notice

It is mutually agreed by the parties to this agreement that rental rates to be paid Contractors for equipment used on force account will be established in accordance with Section 1-09.6 of the Standard Specifications and this agreement. The following rules have been agreed to:

1. **General**

The Rental Rate Blue Book published by Primedia Information, Inc., as clarified or modified by this agreement, will be used to establish rental rates for equipment approved for use on force account work. Rate modifications, indicated on Regional Adjustment Maps in the Blue Book and as applied automatically by the Blue Book CD (Washington State Version), shall be used for all equipment covered under this agreement. Updates to the Rental Rate Book, in compact disk format, are published on a schedule determined by Primedia Information, Inc. Each update will become applicable to force accounts fourteen days after the date on which Primedia Information, Inc. declares the update to be effective. Equipment used under the terms of this agreement will be at the rates in effect for each section of the Blue Book at the time of use except that calculations made prior to the applicable date, using the previous rates, will not be changed.

2. **Rental Rate**

The hourly rental rate for equipment utilized on force account shall be a combination of the following items:

a. The Blue Book monthly rate multiplied by the Rate Adjustment factors for age and geographic location divided by 176.

b. Attachments will be included in the rental rate when the Engineer deems them necessary to accomplish the force account work. An approved attachment that is continuously attached and used intermittently during the work will be paid for the same duration as the host equipment. When multiple attachments are approved for use, and the attachments are being used interchangeably on the force account operation, only the one attachment having the higher rate will be paid.

c. The hourly operating cost for each hour that the equipment is in use. "In use" shall mean that the presence of the equipment is necessary for the operation and that the equipment is present and is not being used for other activities while the force account work is underway. Under the circumstances, the equipment shall be paid at its hourly rate plus the hourly operating cost.

3. **Standby Time**

Standby time shall be defined as the time during which equipment is idled and cannot be assigned to other work on the project. Only that equipment which has been utilized for work on the force account and is expected to be utilized again on the same force account will be eligible for standby compensation. The Contractor is expected to utilize idled equipment on other work if reasonably possible. Standby time will only be paid if the Engineer has had an opportunity to evaluate the cost of standby versus the cost of mobilizing and demobilizing and has ordered standby.

When ordered by the Engineer, standby time shall be paid at one-half of the rate established in accordance with this agreement. The operating cost shall not be included in the calculation for establishing the standby rate. Standby time will not be compensated beyond that amount which will bring the resulting total of operated time and standby time to 8 hours in any one day or 40 hours in any one week.

4. **Rental Equipment**

If Contactor-owned equipment is not reasonably available, the Engineer may approve the use of operated or non-operated rental equipment. Operated equipment shall be considered a "service" and shall be compensated according to section 4 of the force account specification. Non-operated equipment shall be compensated according to the provisions for rented equipment in section 3 of the force account specifications. If the invoice costs of non-operated equipment do not specifically say the fuel is included, the Rental Rate Blue Book Hourly Operating Cost shall be added for each hour the equipment operates.

When invoiced equipment is used on both force account and non-force account work, payment for the equipment will be a prorated share of the invoice cost. The time period covered by the invoice shall reflect the normal practice of the renting agency, except that the time period shall not exceed one month. When calculating the prorated share, the amounts of standby time for both types of work will be considered according to the formula:

$$\text{Share of Invoice to be charged to Force Account} = \frac{\mathbf{FC}}{\mathbf{FC} + \mathbf{NFC}}$$

Where:

FC = $ Force account including standby time.
NFC = $ Non-force account including standby time.

5. **Mobilization**

Force account mobilization of equipment is defined as the preparatory work performed by the Contractor including procurement, loading and transportation of equipment that is intended for use in a force account. A pro-rata adjustment will be made when the equipment is eventually used for regular contract work in addition to the force account work. Mobilization also included the costs incurred during demobilization. The costs will be included in the appropriate sections (Labor, Equipment, Services, etc) depending on the nature of the cost. If the equipment being mobilized is hauled, payment will cover the hauling vehicle (operated cost). In the event that equipment is transferred under its own power, the payment will cover the operated cost of the equipment plus operator costs. Move-out, or demobilization costs will provide for the return of the equipment to the location from which it was obtained. In the event that the move-out is to a different location, payment will not exceed the amount of the move-in.

If approved by the Engineer, payment will be allowed for moving equipment from work site to work site within the project after the equipment is on the job.

Charges for mechanic's time utilized in servicing equipment to ready it for use prior to moving to the project and similar charges will not be allowed.

6. **Blue Book Omissions**

In the event a rate has not been established for a particular piece of equipment in the Rental Rate Blue Book, a rate will be established, utilizing one or more of the following methods:

a. Use a rate for the most similar model found in the applicable Blue Book. Such characteristics as manufacturer, capacity, horsepower, and fuel type will be used as the basis for selecting a similar model.

b. Contact Primedia Information, Inc, (through the WSDOT OSC Construction Office) for the rate not included in the Book.

c. Utilize a rate agreed upon by the parties.

d. For equipment that is older than 20 years the oldest adjustment rate available in the book shall be used.

7. **Breakdown**

The Contractor shall provide reasonable maintenance efforts for equipment utilized in force account. When a breakdown occurs for any piece of equipment being used on force account work, the Contractor shall divert idled equipment. Payment shall cease for the equipment that is broken down. Payment shall also cease for any other equipment that is idled as a result of the breakdown (there will be no standby payment.) Payment for any labor that is idled as a result of the breakdown will be made in accordance with provisions of section 1 of the force account specifications, particularly as related to contractual obligations and normal practices of the Contractor.

8. **Shutdown**

If the Engineer orders a shutdown of any or all of the force account, the equipment idled as a result of the shutdown shall be diverted to other work. When diversion of equipment is not practical, standby time may be paid during non-operating hours as provided in Item 3 of this agreement.

The Engineer reserves the right to cease standby payment for equipment that is idled as a result of a shutdown when the shutdown is anticipated to be for an extended period of time. No further payment shall be allowed after the date the Engineer makes this determination except as provided in Item 5 of this agreement, "Mobilization."

Standby time shall not be paid when shutdown is the result of the fault or negligence of the Contractor.

9. **Small Tools**

Any contractor-owned equipment listed in the Blue Book with a monthly rate of less than $100 and any other equipment with a purchase price of less than $500 shall be considered Small Tools and shall be paid by negotiation rather than using an hourly rate (except for rentals.) Any such small tool that is rented shall be paid according to the rental provisions in the Equipment section of this agreement. All other Small Tools shall be paid by agreement of the parties. After the force account work has been completed, (or more often, by agreement of the parties,) the Contractor shall promptly supply a list of small tools and equipment that have been utilized in the work. The list shall be supported by invoices or, in the event the item came from stock, by a Contractor affidavit of purchase cost. The negotiation of the Small Tools payment may include discussions of shared use with other work and of residual value, if appropriate. Once agreed upon, the small tools amount will be added to the payment amount in the Equipment section (Section 3 of the force account specification.)

10. **Aeration Equipment**

The rental rate for plows and discs shall be as listed below:

Plows and discs meeting the requirements of Section 2-03.3(15) of the Standard Specifications shall be paid at the rate of $9.60 per hour.

Add $0.70 per hour per foot of width for additional width of disc more than 10 ft.

Motive power for discs and plows shall be capable of pulling discs and plows at the speeds specified in Section 2-03.3(15) of the Standard Specifications. Payment for motive power shall be 100 percent of the rates in this agreement except that equipment having motive power in excess of 340 horsepower shall be paid at 100 percent of the highest equipment rate for a comparable unit of the same manufacturer having less than 340 horsepower.

Payment for all other equipment approved for Aeration shall be at the rates established in accordance with this agreement when used for aeration work.

10. **Concurrence, Review Time**

This agreement is issued after conference among representatives of the Associated General Contractors of Washington and the Washington State Department of Transportation and has the approval of both. Either party may request a review after a one-year period.

Associated General Contractors of Washington

Van Collins
Southern District Manager

Washington State Department of Transportation

Linea Laird
State Construction Engineer

APPENDIX G
NPDES CONSTRUCTION STORMWATER GENERAL PERMIT, WASHINGTON STATE DEPARTMENT OF ECOLOGY

(This Page Intentionally Left Blank)

DEPARTMENT OF
ECOLOGY
State of Washington

Instructions for Transfer of Coverage

Construction Stormwater General Permit

Instructions

This form is used to process two types of permit transfers: 1) Complete Transfer, or 2) Partial Transfer. Determine which type of transfer applies to your situation before filling out this form.

1. Complete Transfer: The original permittee has sold, or otherwise released control of, the entire site to another party.

Required Paperwork for Complete Transfer:

- Either the current permittee, or the new permittee(s), must submit a complete and accurate Transfer of Coverage form for each new party to Ecology. The form must be signed by the current permittee and the new permittee.

2. Partial Transfer: The original permittee retains control over some portion of the site after selling or releasing control over a portion of the site.

Required Paperwork for Partial Transfer

- Either the current permittee or the new permittee(s) must submit a complete and accurate Transfer of Coverage Form for each new operator to Ecology. The form must be signed by the current permittee and the new permittee.
- For partial transfers, once all transfers are submitted, the original permittee should submit the Notice of Termination only if the portion(s) they still own or control have undergone final stabilization and meet the criteria for termination.

For Your Information

- When this form is 1) completed, 2) signed by the current and new permittee, and 3) submitted to Ecology, permit transfers are effective on the date specified at the top page 1 (unless Ecology notifies the current permittee and new permittee of its intention to revoke coverage under the General Permit or if Ecology sends notice that the application is incomplete).
- The new permittee should keep a copy of the signed Transfer of Coverage form (which serves as proof of permit coverage) until Ecology sends documentation in the mail.
- Following the transfer, the new permittee must either: (1) use the Stormwater Pollution Prevention Plan (SWPPP) developed by the original operator, and modified as necessary, or (2) develop and use a new SWPPP which meets the requirements of the Construction Stormwater General Permit.
- For projects for which the original permittee has completed a Proposed New Discharge to an Impaired Water Body Form (ECY070-399) or for projects that are operating on sites with soil or groundwater contamination: By completing the Transfer of Coverage form, the new permittee will adopt any special provisions made to protect water quality for sites that have existing contamination or that discharge to an impaired water body.

To ask about the availability of this document in a version for the visually impaired, call the Water Quality Program at 360-407-6600. Persons with hearing loss, call 711 for Washington Relay Service. Persons with a speech disability, call 877-833-6341.

This page is purposely left blank

DEPARTMENT OF ECOLOGY
State of Washington

Transfer of Coverage

Construction Stormwater General Permit

This form transfers permit coverage for all, or a portion of a site to one or more new operators. **Permit # WAR–_____**

Type of permit transfer (check one): ☐ Partial transfer ☐ Complete transfer

Specific date that permit responsibility, coverage, and liability, is transferred to new operator: _____

Please see instructions for details on type of transfer.

Current Operator/Permittee Information

For partial transfers:

- **List total size of project/site remaining under your operational control following transfer:** _____ acres.
- **List total area of soil disturbance remaining under your operational control following transfer:** _____ acres.
- **Submitting this form meets the requirement to submit an updated NOI (General Permit Condition G9)**

Current Operator/Permittee Name:		Company:		
Business Phone:	Ext:	Mailing Address:		
Cell Phone:	Fax (optional):			
Email:		City:	State:	Zip+4:
Signature:		Title: Date:		

New Operator/Permittee Information

I. New Operator/Permittee (Party with operational control over plans and specifications or day-to-day operational control of activities which ensure compliance with Stormwater Pollution Prevention Plan (SWPPP) and permit conditions. Ecology will send correspondence and permit fee invoices to the permittee on record.)

Name:		Company:		
Business Phone:	Ext:	Unified Business Identifier (UBI): *(UBI is a nine-digit number used to identify a business entity.* ***Write "none" if you do not have a UBI number.****)*		
Cell Phone (Optional):	Fax (Optional):	E-mail:		
Mailing Address:		City:	State:	Zip + 4:

II. Property Owner (The party listed on the County Assessor's records as owner and taxpayer of the parcel[s] for which permit coverage is requested. Ecology will not send correspondence and permit fee invoices to the Property Owner. The Property Owner information will be used for emergency contact purposes.**)**

Name:		Company:		
Business Phone:	Ext:	Unified Business Identifier (UBI): *(UBI is a nine-digit number used to identify a business entity.* ***Write "none" if you do not have a UBI number.****)*		
Cell Phone (Optional):	Fax (Optional):	E-mail:		
Mailing Address:		City:	State:	Zip + 4:

III. On-Site Contact Person(s) (Typically the Certified Erosion and Sediment Control Lead or Operator/Permittee)

Name:		**Company:**		
Business Phone:	**Ext:**	**Mailing Address:**		
Cell Phone:	**Fax(Optional):**	**City:**	**State:**	**Zip+4:**
Email:				

IV. Site/Project Information

Site or Project Name

Street Address or Location Description (*If the site lacks a street address, list its specific location. For example, Intersection of Highway 61 and 34.)*

_____

Parcel ID#: _____ *(Optional)*

Type of Construction Activity (*check all that apply*):
- ☐ Residential
- ☐ Commercial
- ☐ Industrial
- ☐ Highway or Road (city ,county, state)
- ☐ Utilities (specify): _____.
- ☐ Other (specify):_____.

Site Acreage
Total size of your site/project (that you own/control): _____acres.
(Note: 1 acre = 43,560 ft².)

Total area of soil disturbance (grading and/or excavating) for your site/project over the life of the project: _____acres.

Concrete / Engineered Soils
How many yards of concrete will be poured? _____yd³ (estimate)

How many yards of recycled concrete will be used? _____yd³ (estimate)

Will any engineered soils be used? (For example: cement treated base, cement kiln dust, etc.)
☐ Yes ☐ No

City (or nearest city):	Zip Code:	Estimated project start-up date (mm/dd/yy):
County:		Estimated project completion date (mm/dd/yy):

Record the latitude and longitude of the *main entrance* to the site or the approximate center of site.

Latitude: _____°N Longitude: _____°W

For assistance with latitude and longitude, refer to any of the following websites: www.getlatlon.com *or* http://www.worldatlas.com/aatlas/imageg.htm. *Please convert all latitude and longitude coordinates into decimal degrees format. For help with this process, go to: http://www.fcc.gov/mb/audio/bickel/DDDMMSS-decimal.html.*

V. Existing Site Conditions

1. Are you aware of contaminated soils present on the site? ☐ Yes ☐ No
2. Are you aware of groundwater contamination located within the site boundary? ☐ Yes ☐ No
3. If you answered yes to questions 1 or 2, will any contaminated soils be disturbed or will any contaminated groundwater be discharged due to the proposed construction activity? ☐ Yes ☐ No

["Contaminated" and "contamination" here mean containing any hazardous substance (as defined in WAC 173-340-200) that does not occur naturally or occurs at greater than natural background levels.]

If you answered yes to Question 3, please explain below or on a separate paper in detail the locations, contaminants, and concentrations, and pollution prevention and/or treatment BMPs proposed to control the discharge of soil/groundwater contaminants. Ecology may request a copy of your SWPPP.

VI. WAWebDMR (Electronic Discharge Monitoring Reporting)

You must submit monthly discharge monitoring reports using Ecology's WAWebDMR system. To sign up for WAWebDMR, or to register a new site, go to www.ecy.wa.gov/stormwater, and click on the "Construction Stormwater" link. You will find information on WAWebDMR under the "WAWebDMR and PARIS" link on the right-hand side. If you are unable to submit your DMRs electronically, you may contact Ecology to request a waiver. Ecology will generally only grant waiver requests to those permittees without internet access. Only a permittee or representative, designated in writing, may request access to or a waiver from WAWebDMR. To have the ability to use the system immediately, **you must submit the Electronic Signature Agreement with your transfer of coverage form**. If you have questions on this process, contact Ecology's WAWebDMR staff at WAWebDMR@ecy.wa.gov or 360-407-7097.

VII. Discharge/Receiving Water Information

Indicate whether your site's stormwater and/or dewatering water could enter surface waters, directly and/or indirectly:

☐ Water will discharge directly or indirectly (through a storm drain system or roadside ditch) into one or more surface water bodies (wetlands, creeks, lakes, and all other surface waters and water courses).

If your discharge is to a storm sewer system, provide the name of the operator of the storm sewer system:

(e.g., City of Tacoma): _____

(NOTE: If your stormwater discharges to a storm sewer system operated by the City of Seattle, King County, Snohomish County, City of Tacoma, Pierce County, or Clark County, you must **also** submit a copy of this NOI to the appropriate jurisdiction.)

☐ Water will discharge to ground with 100% infiltration, with no potential to reach surface waters under any conditions.

If your project includes dewatering, you must include dewatering plans and discharge locations in your site Stormwater Pollution Prevention Plan.

Location of Discharge into Surface Water Body

Enter the outfall identifier code, water body name, and latitude/longitude of the point(s) where the site has the potential to discharge into a water body (enter all locations).

- Include the names and locations of both direct and indirect discharges to surface water bodies, even if the risk of discharge is low or limited to periods of extreme weather.
- Give each point a unique 3-digit alpha numeric code. This code will be used for identifying these points in WAWebDMR
- Some large construction projects (for example, subdivisions, roads, or pipelines) may discharge into several water bodies.
- If the creek or tributary is unnamed, use a format such as "unnamed tributary to Deschutes River."

Attach a separate list if necessary.

Outfall Identifier Code			Surface Water Body Name	Latitude Decimal Degrees	Longitude Decimal Degrees
				° N	° W
				° N	° W
				° N	° W

If your site discharges to a water body that is on the impaired water bodies list (i.e., 303[d] list) for turbidity, fine sediment, high pH, or phosphorus, your sites will be subject to additional sampling and numeric effluent limits (per Permit Condition S8). Information on impaired water bodies is available online at: http://www.ecy.wa.gov/programs/wq/303d/index.html .

Before signing, please use the following checklist to ensure this form is complete:

☐ All spaces on this form have been completed (attach additional sheets if necessary).

☐ The transfer form is signed by both the current permittee and the new permittee(s).

☐ New Operator/Permittee: Before you submit this form to Ecology, please retain a copy for your records – this will serve as proof of permit coverage until documentation arrives from Ecology.

☐ For partial transfers: If the original permittee no longer owns or controls any portions of the site that meet the criteria for termination, the original permittee must submit a Notice of Termination to terminate permit coverage. (http://www.ecy.wa.gov/biblio/ecy02087.html)

☐ For sites with contaminated soils/groundwater or a new discharger to an impaired water body: Any special provisions to protect water quality put in place at the time of initial coverage have been reviewed and adopted by the new permittee.

VIII. Certification of Permittee

"I certify under penalty of law that this document and all attachments were prepared under my direction or supervision in accordance with a system designed to assure that qualified personnel properly gather and evaluate the information submitted. Based on my inquiry of the person or persons who manage the system or those directly responsible for gathering the information, the information submitted is, to the best of my knowledge and belief, true, accurate, and complete. I am aware that there are significant penalties for submitting false information, including the possibility of fine and imprisonment for knowing violations."

Printed/Typed Name	Company (operator/permittee only)	Title
Signature of Operator/Permittee		*Date*

*** Federal regulations require this application is signed by one of the following:**

A. For a corporation: By a principal executive officer of at least the level of vice president.
B. For a partnership or sole proprietorship: By a general partner or the proprietor, respectively.
C. For a municipality, state, federal, or other public facility: By either a principal executive officer or ranking elected official.

Please sign and return this document to the following address:

Washington Department of Ecology - Stormwater
P.O. Box 47696
Olympia, WA 98504-7696

If you have questions about this form, contact the following Ecology staff:

Location	Contact Name	Phone	E-mail
City of Seattle, and Kitsap, Pierce, and Thurston counties	Josh Klimek	360-407-7451	josh.klimek@ecy.wa.gov
Island, King, and San Juan counties	Clay Keown	360-407-6048	clay.keown@ecy.wa.gov
Adams, Asotin, Columbia, Ferry, Franklin, Garfield, Grant, Lincoln, Pend Oreille, Skagit, Snohomish, Spokane, Stevens, Walla, Whatcom, and Whitman counties.	Shawn Hopkins	360-407-6442	shawn.hopkins@ecy.wa.gov
Benton, Chelan, Clallam, Clark, Cowlitz, Douglas, Grays Harbor, Jefferson, Kittitas, Klickitat, Lewis, Mason, Okanogan, Pacific, Skamania, Wahkiakum, and Yakima counties.	Joyce Smith	360-407-6858	joyce.smith@ecy.wa.gov

To ask about the availability of this document in a version for the visually impaired, call the Water Quality Program at 360-407-6600. Persons with hearing loss, call 711 for Washington Relay Service. Persons with a speech disability, call 877-833-6341.

Issuance Date:	December 1, 2010
Effective Date:	January 1, 2011
Expiration Date:	December 31, 2015

CONSTRUCTION STORMWATER GENERAL PERMIT

National Pollutant Discharge Elimination System (NPDES) and State Waste Discharge General Permit for Stormwater Discharges Associated with Construction Activity

State of Washington
Department of Ecology
Olympia, Washington 98504

In compliance with the provisions of
Chapter 90.48 Revised Code of Washington
(State of Washington Water Pollution Control Act)
and
Title 33 United States Code, Section 1251 et seq.
The Federal Water Pollution Control Act (The Clean Water Act)

Until this permit expires, is modified or revoked, Permittees that have properly obtained coverage under this general permit are authorized to discharge in accordance with the special and general conditions that follow.

Kelly Susewind, P.E., P.G.
Water Quality Program Manager
Washington State Department of Ecology

TABLE OF CONTENTS

LIST OF TABLES 3

SPECIAL CONDITIONS 5

S1. PERMIT COVERAGE 5
S2. APPLICATION REQUIREMENTS 8
S3. COMPLIANCE WITH STANDARDS 11
S4. MONITORING REQUIREMENTS 12
S5. REPORTING AND RECORDKEEPING REQUIREMENTS 19
S6. PERMIT FEES 22
S7. SOLID AND LIQUID WASTE DISPOSAL 22
S8. DISCHARGES TO 303(D) OR TMDL WATER BODIES 22
S9. STORMWATER POLLUTION PREVENTION PLAN 26
S10. NOTICE OF TERMINATION 34

GENERAL CONDITIONS 36

G1. DISCHARGE VIOLATIONS 36
G2. SIGNATORY REQUIREMENTS 36
G3. RIGHT OF INSPECTION AND ENTRY 37
G4. GENERAL PERMIT MODIFICATION AND REVOCATION 37
G5. REVOCATION OF COVERAGE UNDER THE PERMIT 37
G6. REPORTING A CAUSE FOR MODIFICATION 38
G7. COMPLIANCE WITH OTHER LAWS AND STATUTES 38
G8. DUTY TO REAPPLY 38
G9. TRANSFER OF GENERAL PERMIT COVERAGE 39
G10. REMOVED SUBSTANCES 39
G11. DUTY TO PROVIDE INFORMATION 39
G12. OTHER REQUIREMENTS OF 40 CFR 39
G13. ADDITIONAL MONITORING 39
G14. PENALTIES FOR VIOLATING PERMIT CONDITIONS 40
G15. UPSET 40

G16. PROPERTY RIGHTS 40
G17. DUTY TO COMPLY 40
G18. TOXIC POLLUTANTS 41
G19. PENALTIES FOR TAMPERING 41
G20. REPORTING PLANNED CHANGES 41
G21. REPORTING OTHER INFORMATION 42
G22. REPORTING ANTICIPATED NON-COMPLIANCE 42
G23. REQUESTS TO BE EXCLUDED FROM COVERAGE UNDER THE PERMIT 42
G24. APPEALS 42
G25. SEVERABILITY 43
G26. BYPASS PROHIBITED 43
APPENDIX A – DEFINITIONS 46
APPENDIX B – ACRONYMS 54

LIST OF TABLES

Table 1. Summary of Permit Report Submittals 4
Table 2. Summary of Required On-site Documentation 4
Table 3. Summary of Primary Monitoring Requirements 12
Table 4. Monitoring and Reporting Requirements 16
Table 5. Turbidity, Fine Sediment & Phosphorus Sampling and Limits for 303(d)-Listed ... 24
Table 6. pH Sampling and Limits for 303(d)-Listed Waters 24

SUMMARY OF PERMIT REPORT SUBMITTALS

Refer to the Special and General Conditions within this permit for additional submittal requirements. Appendix A provides a list of definitions. Appendix B provides a list of acronyms.

Table 1. Summary of Permit Report Submittals

Permit Section	Submittal	Frequency	First Submittal Date
S5.A and S8	High Turbidity/Transparency Phone Reporting	As Necessary	Within 24 hours
S5.B	Discharge Monitoring Report	Monthly*	Within 15 days of applicable monitoring period
S5.F and S8	Noncompliance Notification	As necessary	Immediately
S5.F	Noncompliance Notification – Written Report	As necessary	Within 5 Days of non-compliance
G2.	Notice of Change in Authorization	As necessary	
G6.	Permit Application for Substantive Changes to the Discharge	As necessary	
G8.	Application for Permit Renewal	1/permit cycle	No later than 180 days before expiration
G9.	Notice of Permit Transfer	As necessary	
G20.	Notice of Planned Changes	As necessary	
G22.	Reporting Anticipated Non-compliance	As necessary	

SPECIAL NOTE: *Permittees must submit Discharge Monitoring Reports (DMRs) to the Washington State Department of Ecology monthly, regardless of site discharge, for the full duration of permit coverage. Refer to Section S5.B of this General Permit for more specific information regarding DMRs.

Table 2. Summary of Required On-site Documentation

Document Title	Permit Conditions
Permit Coverage Letter	See Conditions S2, S5
Construction Stormwater General Permit	See Conditions S2, S5
Site Log Book	See Conditions S4, S5
Stormwater Pollution Prevention Plan (SWPPP)	See Conditions S9, S5

SPECIAL CONDITIONS

S1. PERMIT COVERAGE

A. Permit Area

This Construction Stormwater General Permit (CSWGP) covers all areas of Washington State, except for federal and Tribal lands as specified in Special Condition S1.E.3.

B. Operators Required to Seek Coverage Under this General Permit:

1. Operators of the following construction activities are required to seek coverage under this CSWGP:

   a. Clearing, grading and/or excavation that results in the disturbance of one or more acres and discharges stormwater to surface waters of the State; and clearing, grading and/or excavation on sites smaller than one acre that are part of a larger common plan of development or sale, if the common plan of development or sale will ultimately disturb one acre or more and discharge stormwater to surface waters of the State.

      i. This includes forest practices (including, but not limited to, class IV conversions) that are part of a construction activity that will result in the disturbance of one or more acres, and discharge to surface waters of the State (that is, forest practices that prepare a site for construction activities); and

   b. Any size construction activity discharging stormwater to waters of the State that the Department of Ecology ("Ecology"):

      i. Determines to be a significant contributor of pollutants to waters of the State of Washington.

      ii. Reasonably expects to cause a violation of any water quality standard.

2. Operators of the following activities are not required to seek coverage under this CSWGP (unless specifically required under Special Condition S1.B.1.b. above):

   a. Construction activities that discharge all stormwater and non-stormwater to ground water, sanitary sewer, or combined sewer, and have no point source discharge to either surface water or a storm sewer system that drains to surface waters of the State.

   b. Construction activities covered under an Erosivity Waiver (Special Condition S2.C).

   c. Routine maintenance that is performed to maintain the original line and grade, hydraulic capacity, or original purpose of a facility.

C. Authorized Discharges:

1. Stormwater Associated with Construction Activity. Subject to compliance with the terms and conditions of this permit, Permittees are authorized to discharge stormwater associated with construction activity to surface waters of the State or to a storm sewer system that drains to surface waters of the State. (Note that "surface waters of the State" may exist on a construction site as well as off site; for example, a creek running through a site.)

2. Stormwater Associated with Construction Support Activity. This permit also authorizes stormwater discharge from support activities related to the permitted construction site (for example, an on-site portable rock crusher, off-site equipment staging yards, material storage areas, borrow areas, etc.) provided:

   a. The support activity relates directly to the permitted construction site that is required to have a NPDES permit; and

   b. The support activity is not a commercial operation serving multiple unrelated construction projects, and does not operate beyond the completion of the construction activity; and

   c. Appropriate controls and measures are identified in the Stormwater Pollution Prevention Plan (SWPPP) for the discharges from the support activity areas.

3. Non-Stormwater Discharges. The categories and sources of non-stormwater discharges identified below are authorized conditionally, provided the discharge is consistent with the terms and conditions of this permit:

   a. Discharges from fire-fighting activities.

   b. Fire hydrant system flushing.

   c. Potable water, including uncontaminated water line flushing.

   d. Pipeline hydrostatic test water.

   e. Uncontaminated air conditioning or compressor condensate.

   f. Uncontaminated ground water or spring water.

   g. Uncontaminated excavation dewatering water (in accordance with S9.D.10).

   h. Uncontaminated discharges from foundation or footing drains.

   i. Water used to control dust. Permittees must minimize the amount of dust control water used.

   j. Routine external building wash down that does not use detergents.

   k. Landscape irrigation water.

   The SWPPP must adequately address all authorized non-stormwater discharges, except for discharges from fire-fighting activities, and must comply with Special

Condition S3. At a minimum, discharges from potable water (including water line flushing), fire hydrant system flushing, and pipeline hydrostatic test water must undergo the following: dechlorination to a concentration of 0.1 parts per million (ppm) or less, and pH adjustment to within 6.5 – 8.5 standard units (su), if necessary.

D. Prohibited Discharges:

The following discharges to waters of the State, including ground water, are prohibited.

1. Concrete wastewater.
2. Wastewater from washout and clean-up of stucco, paint, form release oils, curing compounds and other construction materials.
3. Process wastewater as defined by 40 Code of Federal Regulations (CFR) 122.1 (see Appendix A of this permit).
4. Slurry materials and waste from shaft drilling.
5. Fuels, oils, or other pollutants used in vehicle and equipment operation and maintenance.
6. Soaps or solvents used in vehicle and equipment washing.
7. Wheel wash wastewater, unless discharged according to Special Condition S9.D.9.d.
8. Discharges from dewatering activities, including discharges from dewatering of trenches and excavations, unless managed according to Special Condition S9.D.10.

E. Limits on Coverage

Ecology may require any discharger to apply for and obtain coverage under an individual permit or another more specific general permit. Such alternative coverage will be required when Ecology determines that this CSWGP does not provide adequate assurance that water quality will be protected, or there is a reasonable potential for the project to cause or contribute to a violation of water quality standards.

The following stormwater discharges are not covered by this permit:

1. Post-construction stormwater discharges that originate from the site after completion of construction activities and the site has undergone final stabilization.
2. Non-point source silvicultural activities such as nursery operations, site preparation, reforestation and subsequent cultural treatment, thinning, prescribed burning, pest and fire control, harvesting operations, surface drainage, or road construction and maintenance, from which there is natural runoff as excluded in 40 CFR Subpart 122.
3. Stormwater from any federal project or project on federal land or land within an Indian Reservation except for the Puyallup Reservation. Within the Puyallup

Reservation, any project that discharges to surface water on land held in trust by the federal government may be covered by this permit.

4. Stormwater from any site covered under an existing NPDES individual permit in which stormwater management and/or treatment requirements are included for all stormwater discharges associated with construction activity.

5. Stormwater from a site where an applicable Total Maximum Daily Load (TMDL) requirement specifically precludes or prohibits discharges from construction activity.

S2. APPLICATION REQUIREMENTS

A. Permit Application Forms

1. Notice of Intent Form/Timeline

a. Operators of new or previously unpermitted construction activities must submit a complete and accurate permit application (Notice of Intent, or NOI) to Ecology.

b. The operator must submit the NOI at least 60 days before discharging stormwater from construction activities and must submit it on or before the date of the first public notice (see Special Condition S2.B below for details). The 30-day public comment period required by WAC 173-226-130(5) begins on the publication date of the second public notice. Unless Ecology responds to the complete application in writing, based on public comments, or any other relevant factors, coverage under the general permit will automatically commence on the thirty-first day following receipt by Ecology of a completed NOI, or the issuance date of this permit, whichever is later, unless Ecology specifies a later date in writing.

c. Applicants who propose to discharge to a storm or sewer system operated by Seattle, King County, Snohomish County, Tacoma, Pierce County, or Clark County must also submit a copy of the NOI to the appropriate jurisdiction.

d. If an applicant intends to use a Best Management Practice (BMP) selected on the basis of Special Condition S9.C.4 ("demonstrably equivalent" BMPs), the applicant must notify Ecology of its selection as part of the NOI. In the event the applicant selects BMPs after submission of the NOI, it must provide notice of the selection of an equivalent BMP to Ecology at least 60 days before intended use of the equivalent BMP.

e. Permittees must notify Ecology regarding any changes to the information provided on the NOI by submitting an updated NOI. Examples of such changes include, but are not limited to,

i. changes to the Permittee's mailing address,

ii. changes to the on-site contact person information, and

iii. changes to the area/acreage affected by construction activity.

2. Transfer of Coverage Form

The Permittee can transfer current coverage under this permit to one or more new operators, including operators of sites within a Common Plan of Development, provided the Permittee submits a Transfer of Coverage Form in accordance with General Condition G9. Transfers do not require public notice.

B. Public Notice

For new or previously unpermitted construction activities, the applicant must publish a public notice at least one time each week for two consecutive weeks, at least 7 days apart, in a newspaper with general circulation in the county where the construction is to take place. The notice must contain:

1. A statement that "The applicant is seeking coverage under the Washington State Department of Ecology's Construction Stormwater NPDES and State Waste Discharge General Permit."

2. The name, address and location of the construction site.

3. The name and address of the applicant.

4. The type of construction activity that will result in a discharge (for example, residential construction, commercial construction, etc.), and the number of acres to be disturbed.

5. The name of the receiving water(s) (that is, the surface water(s) to which the site will discharge), or, if the discharge is through a storm sewer system, the name of the operator of the system.

6. The statement: "Any persons desiring to present their views to the Washington State Department of Ecology regarding this application, or interested in Ecology's action on this application, may notify Ecology in writing no later than 30 days of the last date of publication of this notice. Ecology reviews public comments and considers whether discharges from this project would cause a measurable change in receiving water quality, and, if so, whether the project is necessary and in the overriding public interest according to Tier II antidegradation requirements under WAC 173-201A-320. Comments can be submitted to: Department of Ecology, P.O. Box 47696, Olympia, WA 98504-7696 Attn: Water Quality Program, Construction Stormwater."

C. Erosivity Waiver

Construction site operators may qualify for an erosivity waiver from the CSWGP if the following conditions are met:

1. The site will result in the disturbance of fewer than 5 acres and the site is not a portion of a common plan of development or sale that will disturb 5 acres or greater.

2. Calculation of Erosivity "R" Factor and Regional Timeframe:

   a. The project's rainfall erosivity factor ("R" Factor) must be less than 5 during the period of construction activity, as calculated using either the Texas A&M University online rainfall erosivity calculator at: http://ei.tamu.edu/ or EPA's calculator at http://cfpub.epa.gov/npdes/stormwater/lew/lewcalculator.cfm. The period of construction activity starts when the land is first disturbed and ends with final stabilization. In addition:

   b. The entire period of construction activity must fall within the following timeframes:

      i. For sites west of the Cascades Crest: June 15 – September 15.

      ii. For sites east of the Cascades Crest, excluding the Central Basin: June 15 – October 15.

      iii. For sites east of the Cascades Crest, within the Central Basin: no additional timeframe restrictions apply. The Central Basin is defined as the portions of Eastern Washington with mean annual precipitation of less than 12 inches. For a map of the Central Basin (Region 2), refer to http://www.ecy.wa.gov/pubs/ecy070202.pdf.

3. Construction site operators must submit a complete Erosivity Waiver certification form at least one week before disturbing the land. Certification must include statements that the operator will:

   a. Comply with applicable local stormwater requirements; and

   b. Implement appropriate erosion and sediment control BMPs to prevent violations of water quality standards.

4. This waiver is not available for facilities declared significant contributors of pollutants as defined in Special Condition S1.B.1.b.

5. This waiver does not apply to construction activities which include non-stormwater discharges listed in Special Condition S1.C.3.

6. If construction activity extends beyond the certified waiver period for any reason, the operator must either:

   a. Recalculate the rainfall erosivity "R" factor using the original start date and a new projected ending date and, if the "R" factor is still under 5 and the entire

project falls within the applicable regional timeframe in Special Condition S2.C.2.b, complete and submit an amended waiver certification form before the original waiver expires; or

b. Submit a complete permit application to Ecology in accordance with Special Condition S2.A and B before the end of the certified waiver period.

S3. COMPLIANCE WITH STANDARDS

A. Discharges must not cause or contribute to a violation of surface water quality standards (Chapter 173-201A WAC), ground water quality standards (Chapter 173-200 WAC), sediment management standards (Chapter 173-204 WAC), and human health-based criteria in the National Toxics Rule (40 CFR Part 131.36). Discharges not in compliance with these standards are not authorized.

B. Prior to the discharge of stormwater and non-stormwater to waters of the State, the Permittee must apply all known, available, and reasonable methods of prevention, control, and treatment (AKART). This includes the preparation and implementation of an adequate Stormwater Pollution Prevention Plan (SWPPP), with all appropriate BMPs installed and maintained in accordance with the SWPPP and the terms and conditions of this permit.

C. Ecology presumes that a Permittee complies with water quality standards unless discharge monitoring data or other site-specific information demonstrates that a discharge causes or contributes to a violation of water quality standards, when the Permittee complies with the following conditions. The Permittee must fully:

1. Comply with all permit conditions, including planning, sampling, monitoring, reporting, and recordkeeping conditions.

2. Implement stormwater BMPs contained in stormwater management manuals published or approved by Ecology, or BMPs that are demonstrably equivalent to BMPs contained in stormwater technical manuals published or approved by Ecology, including the proper selection, implementation, and maintenance of all applicable and appropriate BMPs for on-site pollution control. (For purposes of this section, the stormwater manuals listed in Appendix 10 of the Phase I Municipal Stormwater Permit are approved by Ecology.)

D. Where construction sites also discharge to ground water, the ground water discharges must also meet the terms and conditions of this CSWGP. Permittees who discharge to ground water through an injection well must also comply with any applicable requirements of the Underground Injection Control (UIC) regulations, Chapter 173-218 WAC.

S4. MONITORING REQUIREMENTS, BENCHMARKS AND REPORTING TRIGGERS

Table 3. Summary of Primary Monitoring Requirements

Size of Soil Disturbance[1]	Weekly Site Inspections	Weekly Sampling w/ Turbidity Meter	Weekly Sampling w/ Transparency Tube	Weekly pH Sampling[2]	Requires CESCL Certification?
Sites that disturb less than 1 acre, but are part of a larger Common Plan of Development	Required	Not Required	Not Required	Not Required	No
Sites that disturb 1 acre or more, but fewer than 5 acres	Required	Sampling Required – either method[3]		Required	Yes
Sites that disturb 5 acres or more	Required	Required	Not Required[4]	Required	Yes

A. Site Log Book

The Permittee must maintain a site log book that contains a record of the implementation of the SWPPP and other permit requirements, including the installation and maintenance of BMPs, site inspections, and stormwater monitoring.

B. Site Inspections

The Permittee's (operator's) site inspections must include all areas disturbed by construction activities, all BMPs, and all stormwater discharge points. (See Special Conditions S4.B.3 and B.4 below for detailed requirements of the Permittee's Certified Erosion and Sediment Control Lead [CESCL]).

---

[1] Soil disturbance is calculated by adding together all areas affected by construction activity. Construction activity means clearing, grading, excavation, and any other activity that disturbs the surface of the land, including ingress/egress from the site.

[2] If construction activity results in the disturbance of 1 acre or more, and involves significant concrete work (1,000 cubic yards of poured or recycled concrete over the life of a project) or the use of engineered soils (soil amendments including but not limited to Portland cement-treated base [CTB], cement kiln dust [CKD], or fly ash), and stormwater from the affected area drains to surface waters of the State or to a storm sewer stormwater collection system that drains to other surface waters of the State, the Permittee must conduct pH monitoring sampling in accordance with Special Condition S4.D.

[3] Sites with one or more acres, but fewer than 5 acres of soil disturbance, must conduct turbidity or transparency sampling in accordance with Special Condition S4.C.

[4] Sites equal to or greater than 5 acres of soil disturbance must conduct turbidity sampling using a turbidity meter in accordance with Special Condition S4.C.

Construction sites one acre or larger that discharge stormwater to surface waters of the State must have site inspections conducted by a certified CESCL. Sites less than one acre may have a person without CESCL certification conduct inspections; sampling is not required on sites that disturb less than an acre.

1. The Permittee must examine stormwater visually for the presence of suspended sediment, turbidity, discoloration, and oil sheen. The Permittee must evaluate the effectiveness of BMPs and determine if it is necessary to install, maintain, or repair BMPs to improve the quality of stormwater discharges.

   Based on the results of the inspection, the Permittee must correct the problems identified by:

   a. Reviewing the SWPPP for compliance with Special Condition S9 and making appropriate revisions within 7 days of the inspection.

   b. Immediately beginning the process of fully implementing and maintaining appropriate source control and/or treatment BMPs as soon as possible, addressing the problems no later than within 10 days of the inspection. If installation of necessary treatment BMPs is not feasible within 10 days, Ecology may approve additional time when an extension is requested by a Permittee within the initial 10-day response period.

   c. Documenting BMP implementation and maintenance in the site log book.

2. The Permittee must inspect all areas disturbed by construction activities, all BMPs, and all stormwater discharge points at least once every calendar week and within 24 hours of any discharge from the site. (For purposes of this condition, individual discharge events that last more than one day do not require daily inspections. For example, if a stormwater pond discharges continuously over the course of a week, only one inspection is required that week.) The Permittee may reduce the inspection frequency for temporarily stabilized, inactive sites to once every calendar month.

3. The Permittee must have staff knowledgeable in the principles and practices of erosion and sediment control. The CESCL (sites one acre or more) or inspector (sites less than one acre) must have the skills to assess the:

   a. Site conditions and construction activities that could impact the quality of stormwater, and

   b. Effectiveness of erosion and sediment control measures used to control the quality of stormwater discharges.

4. The SWPPP must identify the CESCL or inspector, who must be present on site or on-call at all times. The CESCL must obtain this certification through an approved erosion and sediment control training program that meets the minimum training standards established by Ecology (see BMP C160 in the manual referred to in Special Condition S9.C.1 and 2).

5. The Permittee must summarize the results of each inspection in an inspection report or checklist and enter the report/checklist into, or attach it to, the site log book. At a minimum, each inspection report or checklist must include:

   a. Inspection date and time.

   b. Weather information, the general conditions during inspection and the approximate amount of precipitation since the last inspection, and precipitation within the last 24 hours.

   c. A summary or list of all implemented BMPs, including observations of all erosion/sediment control structures or practices.

   d. A description of the locations:

      i. Of BMPs inspected.

      ii. Of BMPs that need maintenance and why.

      iii. Of BMPs that failed to operate as designed or intended, and

      iv. Where additional or different BMPs are needed, and why.

   e. A description of stormwater discharged from the site. The Permittee must note the presence of suspended sediment, turbidity, discoloration, and oil sheen, as applicable.

   f. Any water quality monitoring performed during inspection.

   g. General comments and notes, including a brief description of any BMP repairs, maintenance or installations made following the inspection.

   h. A summary report and a schedule of implementation of the remedial actions that the Permittee plans to take if the site inspection indicates that the site is out of compliance. The remedial actions taken must meet the requirements of the SWPPP and the permit.

   i. The name, title, and signature of the person conducting the site inspection, a phone number or other reliable method to reach this person, and the following statement: "I certify that this report is true, accurate, and complete to the best of my knowledge and belief."

C. <u>Turbidity/Transparency Sampling Requirements</u>

1. Sampling Methods

   a. If construction activity involves the disturbance of 5 acres or more, the Permittee must conduct turbidity sampling per Special Condition S4.C.

   b. If construction activity involves 1 acre or more but fewer than 5 acres of soil disturbance, the Permittee must conduct either transparency sampling **or** turbidity sampling per Special Condition S4.C.

2. Sampling Frequency

   a. The Permittee must sample all discharge locations at least once every calendar week when stormwater (or authorized non-stormwater) discharges from the site or enters any on-site surface waters of the state (for example, a creek running through a site).

   b. Samples must be representative of the flow and characteristics of the discharge.

   c. Sampling is not required when there is no discharge during a calendar week.

   d. Sampling is not required outside of normal working hours or during unsafe conditions.

   e. If the Permittee is unable to sample during a monitoring period, the Permittee must include a brief explanation in the monthly Discharge Monitoring Report (DMR).

   f. Sampling is not required before construction activity begins.

3. Sampling Locations

   a. Sampling is required at all points where stormwater associated with construction activity (or authorized non-stormwater) is discharged off site, including where it enters any on-site surface waters of the state (for example, a creek running through a site).

   b. The Permittee may discontinue sampling at discharge points that drain areas of the project that are fully stabilized to prevent erosion.

   c. The Permittee must identify all sampling point(s) on the SWPPP site map and clearly mark these points in the field with a flag, tape, stake or other visible marker.

   d. Sampling is not required for discharge that is sent directly to sanitary or combined sewer systems.

4. Sampling and Analysis Methods

   a. The Permittee performs turbidity analysis with a calibrated turbidity meter (turbidimeter) either on site or at an accredited lab. The Permittee must record the results in the site log book in nephelometric turbidity units (NTU).

   b. The Permittee performs transparency analysis on site with a 1¾-inch-diameter, 60-centimeter (cm)-long transparency tube. The Permittee will record the results in the site log book in centimeters (cm). Transparency tubes are available from: http://watermonitoringequip.com/pages/stream.html.

Table 4. Monitoring and Reporting Requirements

Parameter	Unit	Analytical Method	Sampling Frequency	Benchmark Value	Phone Reporting Trigger Value
Turbidity	NTU	SM2130 or EPA 180.1	Weekly, if discharging	25 NTU	250 NTU
Transparency	cm	Manufacturer instructions, or Ecology guidance	Weekly, if discharging	33 cm	6 cm

5. Turbidity/Transparency Benchmark Values and Reporting Triggers

The benchmark value for turbidity is 25 NTU or less. The benchmark value for transparency is 33 centimeters (cm). Note: Benchmark values do not apply to discharges to segments of water bodies on Washington State's 303(d) list (Category 5) for turbidity, fine sediment, or phosphorus; these discharges are subject to a numeric effluent limit for turbidity. Refer to Special Condition S8 for more information.

a. Turbidity 26 – 249 NTU, or Transparency 32 – 7 cm:

If the discharge turbidity is 26 to 249 NTU; or if discharge transparency is less than 33 cm, but equal to or greater than 6 cm, the Permittee must:

i. Review the SWPPP for compliance with Special Condition S9 and make appropriate revisions within 7 days of the date the discharge exceeded the benchmark.

ii. Immediately begin the process to fully implement and maintain appropriate source control and/or treatment BMPs as soon as possible, addressing the problems within 10 days of the date the discharge exceeded the benchmark. If installation of necessary treatment BMPs is not feasible within 10 days, Ecology may approve additional time when the Permittee requests an extension within the initial 10-day response period.

iii. Document BMP implementation and maintenance in the site log book.

b. Turbidity 250 NTU or greater, or Transparency 6 cm or less:

If a discharge point's turbidity is 250 NTU or greater, or if discharge transparency is less than or equal to 6 cm, the Permittee must complete the reporting and adaptive management process described below.

i. Telephone the applicable Ecology Region's Environmental Report Tracking System (ERTS) number within 24 hours, in accordance with Special Condition S5.F.

- Central Region (Okanogan, Chelan, Douglas, Kittitas, Yakima, Klickitat, Benton): (509) 575-2490

- Eastern Region (Adams, Asotin, Columbia, Ferry, Franklin, Garfield, Grant, Lincoln, Pend Oreille, Spokane, Stevens, Walla Walla, Whitman): (509) 329-3400
- Northwest Region (Kitsap, Snohomish, Island, King, San Juan, Skagit, Whatcom): (425) 649-7000
- Southwest Region (Grays Harbor, Lewis, Mason, Thurston, Pierce, Clark, Cowlitz, Skamania, Wahkiakum, Clallam, Jefferson, Pacific): (360) 407-6300

These numbers are also listed at the following web site: http://www.ecy.wa.gov/programs/wq/stormwater/construction/permit.html

ii. Review the SWPPP for compliance with Special Condition S9 and make appropriate revisions within 7 days of the date the discharge exceeded the benchmark.

iii. Immediately begin the process to fully implement and maintain appropriate source control and/or treatment BMPs as soon as possible, addressing the problems within 10 days of the date the discharge exceeded the benchmark. If installation of necessary treatment BMPs is not feasible within 10 days, Ecology may approve additional time when the Permittee requests an extension within the initial 10-day response period.

iv. Document BMP implementation and maintenance in the site log book.

v. Continue to sample discharges daily until:

a) Turbidity is 25 NTU (or lower); or

b) Transparency is 33 cm (or greater); or

c) The Permittee has demonstrated compliance with the water quality limit for turbidity:

1) No more than 5 NTU over background turbidity, if background is less than 50 NTU, or

2) No more than 10% over background turbidity, if background is 50 NTU or greater; or

d) The discharge stops or is eliminated.

D. pH Sampling Requirements -- Significant Concrete Work or Engineered Soils

If construction activity results in the disturbance of 1 acre or more, **and** involves significant concrete work (significant concrete work means greater than 1000 cubic yards poured concrete or recycled concrete used over the life of a project) or the use of engineered soils (soil amendments including but not limited to Portland cement-treated base [CTB], cement kiln dust [CKD], or fly ash), and stormwater from the affected area

drains to surface waters of the State or to a storm sewer system that drains to surface waters of the state, the Permittee must conduct pH monitoring as set forth below. Note: In addition, discharges to segments of water bodies on Washington State's 303(d) list (Category 5) for high pH are subject to a numeric effluent limit for pH; refer to Special Condition S8.

1. For sites with significant concrete work, the Permittee must begin the pH monitoring period when the concrete is first poured and exposed to precipitation, and continue weekly throughout and after the concrete pour and curing period, until stormwater pH is in the range of 6.5 to 8.5 (su).

2. For sites with engineered soils, the Permittee must begin the pH monitoring period when the soil amendments are first exposed to precipitation and must continue until the area of engineered soils is fully stabilized.

3. During the applicable pH monitoring period defined above, the Permittee must obtain a representative sample of stormwater and conduct pH analysis at least once per week.

4. The Permittee must monitor pH in the sediment trap/pond(s) or other locations that receive stormwater runoff from the area of significant concrete work or engineered soils before the stormwater discharges to surface waters.

5. The benchmark value for pH is 8.5 standard units. Anytime sampling indicates that pH is 8.5 or greater, the Permittee must either:

    a. Prevent the high pH water (8.5 or above) from entering storm sewer systems or surface waters; or

    b. If necessary, adjust or neutralize the high pH water until it is in the range of pH 6.5 to 8.5 (su) using an appropriate treatment BMP such as carbon dioxide (CO_2) sparging or dry ice. The Permittee must obtain written approval from Ecology before using any form of chemical treatment other than CO_2 sparging or dry ice.

6. The Permittee must perform pH analysis on site with a calibrated pH meter, pH test kit, or wide range pH indicator paper. The Permittee must record pH monitoring results in the site log book.

S5. REPORTING AND RECORDKEEPING REQUIREMENTS

A. High Turbidity Phone Reporting

Anytime sampling performed in accordance with Special Condition S4.C indicates turbidity has reached the 250 NTU phone reporting level, the Permittee must call Ecology's Regional office by phone within 24 hours of analysis. The web site is http://www.ecy.wa.gov/programs/wq/stormwater/construction/permit.html. Also see phone numbers in Special Condition S4.C.5.b.i.

B. Discharge Monitoring Reports

Permittees required to conduct water quality sampling in accordance with Special Conditions S4.C (Turbidity/Transparency), S4.D (pH), S8 (303[d]/TMDL sampling), and/or G13 (Additional Sampling) must submit the results to Ecology.

Permittees must submit monitoring data using Ecology's WebDMR program. To find out more information and to sign up for WebDMR go to: http://www.ecy.wa.gov/programs/wq/permits/paris/webdmr.html.

Permittees unable to submit electronically (for example, those who do not have an internet connection) must contact Ecology to request a waiver and obtain instructions on how to obtain a paper copy DMR at:

Mailing Address:
Department of Ecology
Water Quality Program
Attn: Stormwater Compliance Specialist
PO Box 47696
Olympia, WA 98504-7696

Permittees who obtain a waiver not to use WebDMR must use the forms provided to them by Ecology; submittals must be mailed to the address above. Permittees shall submit DMR forms to be received by Ecology within 15 days following the end of each month.

If there was no discharge during a given monitoring period, all Permittees must submit a DMR as required with "no discharge" entered in place of the monitoring results. For more information, contact Ecology staff using information provided at the following web site: http://www.ecy.wa.gov/programs/spills/response/assistancesoil%20map.pdf

C. Records Retention

The Permittee must retain records of all monitoring information (site log book, sampling results, inspection reports/checklists, etc.), Stormwater Pollution Prevention Plan, and any other documentation of compliance with permit requirements for the entire life of the construction project and for a minimum of three years following the termination of permit coverage. Such information must include all calibration and maintenance records, and records of all data used to complete the application for this

permit. This period of retention must be extended during the course of any unresolved litigation regarding the discharge of pollutants by the Permittee or when requested by Ecology.

D. Recording Results

For each measurement or sample taken, the Permittee must record the following information:

1. Date, place, method, and time of sampling or measurement.
2. The first and last name of the individual who performed the sampling or measurement.
3. The date(s) the analyses were performed.
4. The first and last name of the individual who performed the analyses.
5. The analytical techniques or methods used.
6. The results of all analyses.

E. Additional Monitoring by the Permittee

If the Permittee monitors any pollutant more frequently than required by this permit using test procedures specified by Special Condition S4 of this permit, the results of this monitoring must be included in the calculation and reporting of the data submitted in the Permittee's DMR.

F. Noncompliance Notification

In the event the Permittee is unable to comply with any part of the terms and conditions of this permit, and the resulting noncompliance may cause a threat to human health or the environment, the Permittee must:

1. Immediately notify Ecology of the failure to comply by calling the applicable Regional office ERTS phone number (find at http://www.ecy.wa.gov/programs/spills/response/assistancesoil%20map.pdf) or refer to Special Condition S4.C.5.b.i.
2. Immediately take action to prevent the discharge/pollution, or otherwise stop or correct the noncompliance, and, if applicable, repeat sampling and analysis of any noncompliance immediately and submit the results to Ecology within five (5) days of becoming aware of the violation.
3. Submit a detailed written report to Ecology within five (5) days, unless requested earlier by Ecology. The report must contain a description of the noncompliance, including exact dates and times, and if the noncompliance has not been corrected, the anticipated time it is expected to continue; and the steps taken or planned to reduce, eliminate, and prevent reoccurrence of the noncompliance.

The Permittee must report any unanticipated bypass and/or upset that exceeds any effluent limit in the permit in accordance with the 24-hour reporting requirement contained in 40 C.F.R. 122.41(l)(6)).

Compliance with these requirements does not relieve the Permittee from responsibility to maintain continuous compliance with the terms and conditions of this permit or the resulting liability for failure to comply. Refer to Section G14 of this permit for specific information regarding non-compliance.

G. Access to Plans and Records

1. The Permittee must retain the following permit documentation (plans and records) on site, or within reasonable access to the site, for use by the operator or for on-site review by Ecology or the local jurisdiction:

   a. General Permit.

   b. Permit Coverage Letter.

   c. Stormwater Pollution Prevention Plan (SWPPP).

   d. Site Log Book.

2. The Permittee must address written requests for plans and records listed above (Special Condition S5.G.1) as follows:

   a. The Permittee must provide a copy of plans and records to Ecology within 14 days of receipt of a written request from Ecology.

   b. The Permittee must provide a copy of plans and records to the public when requested in writing. Upon receiving a written request from the public for the Permittee's plans and records, the Permittee must either:

      i. Provide a copy of the plans and records to the requester within 14 days of a receipt of the written request; or

      ii. Notify the requester within 10 days of receipt of the written request of the location and times within normal business hours when the plans and records may be viewed; and provide access to the plans and records within 14 days of receipt of the written request; or

      Within 14 days of receipt of the written request, the Permittee may submit a copy of the plans and records to Ecology for viewing and/or copying by the requester at an Ecology office, or a mutually agreed location. If plans and records are viewed and/or copied at a location other than at an Ecology office, the Permittee will provide reasonable access to copying services for which a reasonable fee may be charged. The Permittee must notify the requester within 10 days of receipt of the request where the plans and records may be viewed and/or copied.

S6. PERMIT FEES

The Permittee must pay permit fees assessed by Ecology. Fees for stormwater discharges covered under this permit are established by Chapter 173-224 WAC. Ecology continues to assess permit fees until the permit is terminated in accordance with Special Condition S10 or revoked in accordance with General Condition G5.

S7. SOLID AND LIQUID WASTE DISPOSAL

The Permittee must handle and dispose of solid and liquid wastes generated by construction activity, such as demolition debris, construction materials, contaminated materials, and waste materials from maintenance activities, including liquids and solids from cleaning catch basins and other stormwater facilities, in accordance with:

A. Special Condition S3, Compliance with Standards.

B. WAC 173-216-110.

C. Other applicable regulations.

S8. DISCHARGES TO 303(D) OR TMDL WATER BODIES

A. Sampling and Numeric Effluent Limits For Certain Discharges to 303(d)-listed Water Bodies

1. Permittees who discharge to segments of water bodies listed as impaired by the State of Washington under Section 303(d) of the Clean Water Act for turbidity, fine sediment, high pH, or phosphorus, must conduct water quality sampling according to the requirements of this section, and Special Conditions S4.C.2.b-f and S4.C.3.b-d, and must comply with the applicable numeric effluent limitations in S8.C and S8.D.

2. All references and requirements associated with Section 303(d) of the Clean Water Act mean the most current listing by Ecology of impaired waters (Category 5) that exists on January 1, 2011, or the date when the operator's complete permit application is received by Ecology, whichever is later.

B. Limits on Coverage for New Discharges to TMDL or 303(d)-listed Waters

Operators of construction sites that discharge to a 303(d)-listed water body are not eligible for coverage under this permit *unless* the operator:

1. Prevents exposing stormwater to pollutants for which the water body is impaired, and retains documentation in the SWPPP that details procedures taken to prevent exposure on site; or

2. Documents that the pollutants for which the water body is impaired are not present at the site, and retains documentation of this finding within the SWPPP; or

3. Provides Ecology with data indicating the discharge is not expected to cause or contribute to an exceedance of a water quality standard, and retains such data on site with the SWPPP. The operator must provide data and other technical information to Ecology that sufficiently demonstrate:

   a. For discharges to waters without an EPA-approved or -established TMDL, that the discharge of the pollutant for which the water is impaired will meet in-stream water quality criteria at the point of discharge to the water body; or

   b. For discharges to waters with an EPA-approved or -established TMDL, that there is sufficient remaining wasteload allocation in the TMDL to allow construction stormwater discharge and that existing dischargers to the water body are subject to compliance schedules designed to bring the water body into attainment with water quality standards.

   Operators of construction sites are eligible for coverage under this permit if Ecology issues permit coverage based upon an affirmative determination that the discharge will not cause or contribute to the existing impairment.

C. Sampling and Numeric Effluent Limits for Discharges to Water Bodies on the 303(d) List for Turbidity, Fine Sediment, or Phosphorus

1. Permittees who discharge to segments of water bodies on the 303(d) list (Category 5) for turbidity, fine sediment, or phosphorus must conduct turbidity sampling in accordance with Special Condition S4.C.2 and comply with either of the numeric effluent limits noted in Table 5 below.

2. As an alternative to the 25 NTU effluent limit noted in Table 5 below (applied at the point where stormwater [or authorized non-stormwater] is discharged off-site), permittees may choose to comply with the surface water quality standard for turbidity. The standard is: no more than 5 NTU over background turbidity when the background turbidity is 50 NTU or less, or no more than a 10% increase in turbidity when the background turbidity is more than 50 NTU. In order to use the water quality standard requirement, the sampling must take place at the following locations:

   a. Background turbidity in the 303(d)-listed receiving water immediately upstream (upgradient) or outside the area of influence of the discharge.

   b. Turbidity at the point of discharge into the 303(d)-listed receiving water, inside the area of influence of the discharge.

3. Discharges that exceed the numeric effluent limit for turbidity constitute a violation of this permit.

4. Permittees whose discharges exceed the numeric effluent limit shall sample discharges daily until the violation is corrected and comply with the non-compliance notification requirements in Special Condition S5.F.

Table 5. Turbidity, Fine Sediment & Phosphorus Sampling and Limits for 303(d)-Listed Waters

Parameter identified in 303(d) listing	Parameter Sampled	Unit	Analytical Method	Sampling Frequency	Numeric Effluent Limit[1]
• Turbidity • Fine Sediment • Phosphorus	Turbidity	NTU	SM2130 or EPA180.1	Weekly, if discharging	25 NTU, at the point where stormwater is discharged from the site; OR In compliance with the surface water quality standard for turbidity (S8.C.1.a)

[1]Permittees subject to a numeric effluent limit for turbidity may, at their discretion, choose either numeric effluent limitation based on site-specific considerations including, but not limited to, safety, access and convenience.

D. Discharges to Water Bodies on the 303(d) List for High pH

1. Permittees who discharge to segments of water bodies on the 303(d) list (Category 5) for high pH must conduct pH sampling in accordance with the table below, and comply with the numeric effluent limit of pH 6.5 to 8.5 su (Table 6).

Table 6. pH Sampling and Limits for 303(d)-Listed Waters

Parameter identified in 303(d) listing	Parameter Sampled/Units	Analytical Method	Sampling Frequency	Numeric Effluent Limit
High pH	pH /Standard Units	pH meter	Weekly, if discharging	In the range of 6.5 – 8.5

2. At the Permittee's discretion, compliance with the limit shall be assessed at one of the following locations:

   a. Directly in the 303(d)-listed water body segment, inside the immediate area of influence of the discharge; or

   b. Alternatively, the permittee may measure pH at the point where the discharge leaves the construction site, rather than in the receiving water.

3. Discharges that exceed the numeric effluent limit for pH (outside the range of 6.5 – 8.5 su) constitute a violation of this permit.

4. Permittees whose discharges exceed the numeric effluent limit shall sample discharges daily until the violation is corrected and comply with the non-compliance notification requirements in Special Condition S5.F.

E. Sampling and Limits for Sites Discharging to Waters Covered by a TMDL or Another Pollution Control Plan

1. Discharges to a water body that is subject to a Total Maximum Daily Load (TMDL) for turbidity, fine sediment, high pH, or phosphorus must be consistent with the TMDL. Refer to http://www.ecy.wa.gov/programs/wq/tmdl/index.html for more information on TMDLs.

   a. Where an applicable TMDL sets specific waste load allocations or requirements for discharges covered by this permit, discharges must be consistent with any specific waste load allocations or requirements established by the applicable TMDL.

      i. The Permittee must sample discharges weekly or as otherwise specified by the TMDL to evaluate compliance with the specific waste load allocations or requirements.

      ii. Analytical methods used to meet the monitoring requirements must conform to the latest revision of the Guidelines Establishing Test Procedures for the Analysis of Pollutants contained in 40 CFR Part 136. Turbidity and pH methods need not be accredited or registered unless conducted at a laboratory which must otherwise be accredited or registered.

   b. Where an applicable TMDL has established a general waste load allocation for construction stormwater discharges, but has not identified specific requirements, compliance with Special Conditions S4 (Monitoring) and S9 (SWPPPs) will constitute compliance with the approved TMDL.

   c. Where an applicable TMDL has not specified a waste load allocation for construction stormwater discharges, but has not excluded these discharges, compliance with Special Conditions S4 (Monitoring) and S9 (SWPPPs) will constitute compliance with the approved TMDL.

   d. Where an applicable TMDL specifically precludes or prohibits discharges from construction activity, the operator is not eligible for coverage under this permit.

2. Applicable TMDL means a TMDL for turbidity, fine sediment, high pH, or phosphorus that is completed and approved by EPA before January 1, 2011, or before the date the operator's complete permit application is received by Ecology, whichever is later. TMDLs completed after the operator's complete permit application is received by Ecology become applicable to the Permittee only if they are imposed through an administrative order by Ecology, or through a modification of permit coverage.

S9. STORMWATER POLLUTION PREVENTION PLAN

The Permittee must prepare and properly implement an adequate Stormwater Pollution Prevention Plan (SWPPP) for construction activity in accordance with the requirements of this permit beginning with initial soil disturbance and until final stabilization.

A. The Permittee's SWPPP must meet the following objectives:

1. To implement best management practices (BMPs) to prevent erosion and sedimentation, and to identify, reduce, eliminate or prevent stormwater contamination and water pollution from construction activity.

2. To prevent violations of surface water quality, ground water quality, or sediment management standards.

3. To control peak volumetric flow rates and velocities of stormwater discharges.

B. General Requirements

1. The SWPPP must include a narrative and drawings. All BMPs must be clearly referenced in the narrative and marked on the drawings. The SWPPP narrative must include documentation to explain and justify the pollution prevention decisions made for the project. Documentation must include:

   a. Information about existing site conditions (topography, drainage, soils, vegetation, etc.).

   b. Potential erosion problem areas.

   c. The 12 elements of a SWPPP in Special Condition S9.D.1-12, including BMPs used to address each element.

   d. Construction phasing/sequence and general BMP implementation schedule.

   e. The actions to be taken if BMP performance goals are not achieved—for example, a contingency plan for additional treatment and/or storage of stormwater that would violate the water quality standards if discharged.

   f. Engineering calculations for ponds and any other designed structures.

2. The Permittee must modify the SWPPP if, during inspections or investigations conducted by the owner/operator, or the applicable local or state regulatory authority, it is determined that the SWPPP is, or would be, ineffective in eliminating or significantly minimizing pollutants in stormwater discharges from the site. The Permittee must then:

   a. Review the SWPPP for compliance with Special Condition S9 and make appropriate revisions within 7 days of the inspection or investigation.

   b. Immediately begin the process to fully implement and maintain appropriate source control and/or treatment BMPs as soon as possible, addressing the problems no later than 10 days from the inspection or investigation. If

installation of necessary treatment BMPs is not feasible within 10 days, Ecology may approve additional time when an extension is requested by a Permittee within the initial 10-day response period,

c. Document BMP implementation and maintenance in the site log book.

The Permittee must modify the SWPPP whenever there is a change in design, construction, operation, or maintenance at the construction site that has, or could have, a significant effect on the discharge of pollutants to waters of the State.

C. Stormwater Best Management Practices (BMPs)

BMPs must be consistent with:

1. Stormwater Management Manual for Western Washington (most recent edition), for sites west of the crest of the Cascade Mountains; or

2. Stormwater Management Manual for Eastern Washington (most recent edition), for sites east of the crest of the Cascade Mountains; or

3. Revisions to the manuals listed in Special Condition S9.C.1. & 2., or other stormwater management guidance documents or manuals which provide an equivalent level of pollution prevention, that are approved by Ecology and incorporated into this permit in accordance with the permit modification requirements of WAC 173-226-230; or

4. Documentation in the SWPPP that the BMPs selected provide an equivalent level of pollution prevention, compared to the applicable Stormwater Management Manuals, including:

   a. The technical basis for the selection of all stormwater BMPs (scientific, technical studies, and/or modeling) that support the performance claims for the BMPs being selected.

   b. An assessment of how the selected BMP will satisfy AKART requirements and the applicable federal technology-based treatment requirements under 40 CFR part 125.3.

D. SWPPP – Narrative Contents and Requirements

The Permittee must include each of the 12 elements below in Special Condition S9.D.1-12 in the narrative of the SWPPP and implement them unless site conditions render the element unnecessary and the exemption from that element is clearly justified in the SWPPP.

1. Preserve Vegetation/Mark Clearing Limits

   a. Before beginning land-disturbing activities, including clearing and grading, clearly mark all clearing limits, sensitive areas and their buffers, and trees that are to be preserved within the construction area.

b. Retain the duff layer, native top soil, and natural vegetation in an undisturbed state to the maximum degree practicable.

2. Establish Construction Access

a. Limit construction vehicle access and exit to one route, if possible.

b. Stabilize access points with a pad of quarry spalls, crushed rock, or other equivalent BMPs, to minimize tracking sediment onto roads.

c. Locate wheel wash or tire baths on site, if the stabilized construction entrance is not effective in preventing tracking sediment onto roads.

d. If sediment is tracked off site, clean the affected roadway thoroughly at the end of each day, or more frequently as necessary (for example, during wet weather). Remove sediment from roads by shoveling, sweeping, or pickup and transport of the sediment to a controlled sediment disposal area.

e. Conduct street washing only after sediment removal in accordance with Special Condition S9.D.2.d. Control street wash wastewater by pumping back on site or otherwise preventing it from discharging into systems tributary to waters of the State.

3. Control Flow Rates

a. Protect properties and waterways downstream of development sites from erosion and the associated discharge of turbid waters due to increases in the velocity and peak volumetric flow rate of stormwater runoff from the project site, as required by local plan approval authority.

b. Where necessary to comply with Special Condition S9.D.3.a, construct stormwater retention or detention facilities as one of the first steps in grading. Assure that detention facilities function properly before constructing site improvements (for example, impervious surfaces).

c. If permanent infiltration ponds are used for flow control during construction, protect these facilities from siltation during the construction phase.

4. Install Sediment Controls

The Permittee must design, install and maintain effective erosion controls and sediment controls to minimize the discharge of pollutants. At a minimum, the Permittee must design, install and maintain such controls to:

a. Construct sediment control BMPs (sediment ponds, traps, filters, etc.) as one of the first steps in grading. These BMPs must be functional before other land disturbing activities take place.

b. Minimize sediment discharges from the site. The design, installation and maintenance of erosion and sediment controls must address factors such as the amount, frequency, intensity and duration of precipitation, the nature of

resulting stormwater runoff, and soil characteristics, including the range of soil particle sizes expected to be present on the site.

c. Direct stormwater runoff from disturbed areas through a sediment pond or other appropriate sediment removal BMP, before the runoff leaves a construction site or before discharge to an infiltration facility. Runoff from fully stabilized areas may be discharged without a sediment removal BMP, but must meet the flow control performance standard of Special Condition S9.D.3.a.

d. Locate BMPs intended to trap sediment on site in a manner to avoid interference with the movement of juvenile salmonids attempting to enter off-channel areas or drainages.

e. Provide and maintain natural buffers around surface waters, direct stormwater to vegetated areas to increase sediment removal and maximize stormwater infiltration, unless infeasible.

f. Where feasible, design outlet structures that withdraw impounded stormwater from the surface to avoid discharging sediment that is still suspended lower in the water column.

5. Stabilize Soils

a. The Permittee must stabilize exposed and unworked soils by application of effective BMPs that prevent erosion. Applicable BMPs include, but are not limited to: temporary and permanent seeding, sodding, mulching, plastic covering, erosion control fabrics and matting, soil application of polyacrylamide (PAM), the early application of gravel base on areas to be paved, and dust control.

b. The Permittee must control stormwater volume and velocity within the site to minimize soil erosion.

c. The Permittee must control stormwater discharges, including both peak flow rates and total stormwater volume, to minimize erosion at outlets and to minimize downstream channel and stream bank erosion.

d. Depending on the geographic location of the project, the Permittee must not allow soils to remain exposed and unworked for more than the time periods set forth below to prevent erosion:

West of the Cascade Mountains Crest
During the dry season (May 1 - Sept. 30): 7 days
During the wet season (October 1 - April 30): 2 days

East of the Cascade Mountains Crest, except for Central Basin*
During the dry season (July 1 - September 30): 10 days
During the wet season (October 1 - June 30): 5 days

The Central Basin*, East of the Cascade Mountains Crest

During the dry Season (July 1 - September 30): 30 days
During the wet season (October 1 - June 30): 15 days

*Note: The Central Basin is defined as the portions of Eastern Washington with mean annual precipitation of less than 12 inches.

e. The Permittee must stabilize soils at the end of the shift before a holiday or weekend if needed based on the weather forecast.

f. The Permittee must stabilize soil stockpiles from erosion, protected with sediment trapping measures, and where possible, be located away from storm drain inlets, waterways, and drainage channels.

g. The Permittee must minimize the amount of soil exposed during construction activity.

h. The Permittee must minimize the disturbance of steep slopes.

i. The Permittee must minimize soil compaction and, unless infeasible, preserve topsoil.

6. Protect Slopes

a. The Permittee must design and construct cut-and-fill slopes in a manner to minimize erosion. Applicable practices include, but are not limited to, reducing continuous length of slope with terracing and diversions, reducing slope steepness, and roughening slope surfaces (for example, track walking).

b. The Permittee must divert off-site stormwater (run-on) or ground water away from slopes and disturbed areas with interceptor dikes, pipes, and/or swales. Off-site stormwater should be managed separately from stormwater generated on the site.

c. At the top of slopes, collect drainage in pipe slope drains or protected channels to prevent erosion.

i. West of the Cascade Mountains Crest: Temporary pipe slope drains must handle the peak 10-minute velocity of flow from a Type 1A, 10-year, 24-hour frequency storm for the developed condition. Alternatively, the 10-year, 1-hour flow rate predicted by an approved continuous runoff model, increased by a factor of 1.6, may be used. The hydrologic analysis must use the existing land cover condition for predicting flow rates from tributary areas outside the project limits. For tributary areas on the project site, the analysis must use the temporary or permanent project land cover condition, whichever will produce the highest flow rates. If using the Western Washington Hydrology Model (WWHM) to predict flows, bare soil areas should be modeled as "landscaped area."

ii. East of the Cascade Mountains Crest: Temporary pipe slope drains must handle the expected peak flow velocity from a 6-month, 3-hour storm for the developed condition, referred to as the short duration storm.

d. Place excavated material on the uphill side of trenches, consistent with safety and space considerations.

e. Place check dams at regular intervals within constructed channels that are cut down a slope.

7. Protect Drain Inlets

a. Protect all storm drain inlets made operable during construction so that stormwater runoff does not enter the conveyance system without first being filtered or treated to remove sediment.

b. Clean or remove and replace inlet protection devices when sediment has filled one-third of the available storage (unless a different standard is specified by the product manufacturer).

8. Stabilize Channels and Outlets

a. Design, construct and stabilize all on-site conveyance channels to prevent erosion from the following expected peak flows:

i. West of the Cascade Mountains Crest: Channels must handle the peak 10-minute velocity of flow from a Type 1A, 10-year, 24-hour frequency storm for the developed condition. Alternatively, the 10-year, 1-hour flow rate indicated by an approved continuous runoff model, increased by a factor of 1.6, may be used. The hydrologic analysis must use the existing land cover condition for predicting flow rates from tributary areas outside the project limits. For tributary areas on the project site, the analysis must use the temporary or permanent project land cover condition, whichever will produce the highest flow rates. If using the WWHM to predict flows, bare soil areas should be modeled as "landscaped area."

ii. East of the Cascade Mountains Crest: Channels must handle the expected peak flow velocity from a 6-month, 3-hour storm for the developed condition, referred to as the short duration storm.

b. Provide stabilization, including armoring material, adequate to prevent erosion of outlets, adjacent stream banks, slopes, and downstream reaches at the outlets of all conveyance systems.

9. Control Pollutants

Design, install, implement and maintain effective pollution prevention measures to minimize the discharge of pollutants. The Permittee must:

a. Handle and dispose of all pollutants, including waste materials and demolition debris that occur on site in a manner that does not cause contamination of stormwater.

b. Provide cover, containment, and protection from vandalism for all chemicals, liquid products, petroleum products, and other materials that have the potential to pose a threat to human health or the environment. On-site fueling tanks must include secondary containment. Secondary containment means placing tanks or containers within an impervious structure capable of containing 110% of the volume contained in the largest tank within the containment structure. Double-walled tanks do not require additional secondary containment.

c. Conduct maintenance, fueling, and repair of heavy equipment and vehicles using spill prevention and control measures. Clean contaminated surfaces immediately following any spill incident.

d. Discharge wheel wash or tire bath wastewater to a separate on-site treatment system that prevents discharge to surface water, such as closed-loop recirculation or upland land application, or to the sanitary sewer with local sewer district approval.

e. Apply fertilizers and pesticides in a manner and at application rates that will not result in loss of chemical to stormwater runoff. Follow manufacturers' label requirements for application rates and procedures.

f. Use BMPs to prevent contamination of stormwater runoff by pH-modifying sources. The sources for this contamination include, but are not limited to: bulk cement, cement kiln dust, fly ash, new concrete washing and curing waters, waste streams generated from concrete grinding and sawing, exposed aggregate processes, dewatering concrete vaults, concrete pumping and mixer washout waters. (Also refer to the definition for "concrete wastewater" in Appendix A--Definitions.)

g. Adjust the pH of stormwater if necessary to prevent violations of water quality standards.

h. Assure that washout of concrete trucks is performed offsite or in designated concrete washout areas only. Do not wash out concrete trucks onto the ground, or into storm drains, open ditches, streets, or streams. Do not dump excess concrete on site, except in designated concrete washout areas. Concrete spillage or concrete discharge to surface waters of the State is prohibited.

i. Obtain written approval from Ecology before using chemical treatment other than CO_2 or dry ice to adjust pH.

10. Control Dewatering

a. Permittees must discharge foundation, vault, and trench dewatering water, which have characteristics similar to stormwater runoff at the site, into a

controlled conveyance system before discharge to a sediment trap or sediment pond.

b. Permittees may discharge clean, non-turbid dewatering water, such as well-point ground water, to systems tributary to, or directly into surface waters of the State, as specified in Special Condition S9.D.8, provided the dewatering flow does not cause erosion or flooding of receiving waters. Do not route clean dewatering water through stormwater sediment ponds. Note that "surface waters of the State" may exist on a construction site as well as off site; for example, a creek running through a site.

c. Other treatment or disposal options may include:

   i. Infiltration.

   ii. Transport off site in a vehicle, such as a vacuum flush truck, for legal disposal in a manner that does not pollute state waters.

   iii. Ecology-approved on-site chemical treatment or other suitable treatment technologies.

   iv. Sanitary or combined sewer discharge with local sewer district approval, if there is no other option.

   v. Use of a sedimentation bag with discharge to a ditch or swale for small volumes of localized dewatering.

d. Permittees must handle highly turbid or contaminated dewatering water separately from stormwater.

11. Maintain BMPs

   a. Permittees must maintain and repair all temporary and permanent erosion and sediment control BMPs as needed to assure continued performance of their intended function in accordance with BMP specifications.

   b. Permittees must remove all temporary erosion and sediment control BMPs within 30 days after achieving final site stabilization or after the temporary BMPs are no longer needed.

12. Manage the Project

   a. Phase development projects to the maximum degree practicable and take into account seasonal work limitations.

   b. Inspection and monitoring -- Inspect, maintain and repair all BMPs as needed to assure continued performance of their intended function. Conduct site inspections and monitoring in accordance with Special Condition S4.

   c. Maintaining an updated construction SWPPP -- Maintain, update, and implement the SWPPP in accordance with Special Conditions S3, S4 and S9.

E. SWPPP – Map Contents and Requirements

The Permittee's SWPPP must also include a vicinity map or general location map (for example, a USGS quadrangle map, a portion of a county or city map, or other appropriate map) with enough detail to identify the location of the construction site and receiving waters within one mile of the site.

The SWPPP must also include a legible site map (or maps) showing the entire construction site. The following features must be identified, unless not applicable due to site conditions:

1. The direction of north, property lines, and existing structures and roads.
2. Cut and fill slopes indicating the top and bottom of slope catch lines.
3. Approximate slopes, contours, and direction of stormwater flow before and after major grading activities.
4. Areas of soil disturbance and areas that will not be disturbed.
5. Locations of structural and nonstructural controls (BMPs) identified in the SWPPP.
6. Locations of off-site material, stockpiles, waste storage, borrow areas, and vehicle/equipment storage areas.
7. Locations of all surface water bodies, including wetlands.
8. Locations where stormwater or non-stormwater discharges off-site and/or to a surface water body, including wetlands.
9. Location of water quality sampling station(s), if sampling is required by state or local permitting authority.
10. Areas where final stabilization has been accomplished and no further construction-phase permit requirements apply.

S10. NOTICE OF TERMINATION

A. The site is eligible for termination of coverage when it has met any of the following conditions:

1. The site has undergone final stabilization, the Permittee has removed all temporary BMPs (except biodegradable BMPs clearly manufactured with the intention for the material to be left in place and not interfere with maintenance or land use), and all stormwater discharges associated with construction activity have been eliminated; or
2. All portions of the site that have not undergone final stabilization per Special Condition S10.A.1 have been sold and/or transferred (per General Condition G9), and the Permittee no longer has operational control of the construction activity; or

3. For residential construction only, the Permittee has completed temporary stabilization and the homeowners have taken possession of the residences.

B. When the site is eligible for termination, the Permittee must submit a complete and accurate Notice of Termination (NOT) form, signed in accordance with General Condition G2, to:

Department of Ecology
Water Quality Program - Construction Stormwater
PO Box 47696
Olympia, Washington 98504-7696

The termination is effective on the date Ecology receives the NOT form, unless Ecology notifies the Permittee within 30 days that termination request is denied because the Permittee has not met the eligibility requirements in Special Condition S10.A.

Permittees transferring the property to a new property owner or operator/permittee are required to complete and submit the Notice of Transfer form to Ecology, but are not required to submit a Notice of Termination form for this type of transaction.

GENERAL CONDITIONS

G1. DISCHARGE VIOLATIONS

All discharges and activities authorized by this general permit must be consistent with the terms and conditions of this general permit. Any discharge of any pollutant more frequent than or at a level in excess of that identified and authorized by the general permit must constitute a violation of the terms and conditions of this permit.

G2. SIGNATORY REQUIREMENTS

A. All permit applications must bear a certification of correctness to be signed:

1. In the case of corporations, by a responsible corporate officer of at least the level of vice president of a corporation;
2. In the case of a partnership, by a general partner of a partnership;
3. In the case of sole proprietorship, by the proprietor; or
4. In the case of a municipal, state, or other public facility, by either a principal executive officer or ranking elected official.

B. All reports required by this permit and other information requested by Ecology must be signed by a person described above or by a duly authorized representative of that person. A person is a duly authorized representative only if:

1. The authorization is made in writing by a person described above and submitted to the Ecology.
2. The authorization specifies either an individual or a position having responsibility for the overall operation of the regulated facility, such as the position of plant manager, superintendent, position of equivalent responsibility, or an individual or position having overall responsibility for environmental matters.

C. Changes to authorization. If an authorization under paragraph G2.B.2 above is no longer accurate because a different individual or position has responsibility for the overall operation of the facility, a new authorization satisfying the requirements of paragraph G2.B.2 above must be submitted to Ecology prior to or together with any reports, information, or applications to be signed by an authorized representative.

D. Certification. Any person signing a document under this section must make the following certification:

"I certify under penalty of law, that this document and all attachments were prepared under my direction or supervision in accordance with a system designed to assure that qualified personnel properly gathered and evaluated the information submitted. Based on my inquiry of the person or persons who manage the system, or those persons directly responsible for gathering

information, the information submitted is, to the best of my knowledge and belief, true, accurate, and complete. I am aware that there are significant penalties for submitting false information, including the possibility of fine and imprisonment for knowing violations."

G3. RIGHT OF INSPECTION AND ENTRY

The Permittee must allow an authorized representative of Ecology, upon the presentation of credentials and such other documents as may be required by law:

A. To enter upon the premises where a discharge is located or where any records are kept under the terms and conditions of this permit.

B. To have access to and copy – at reasonable times and at reasonable cost -- any records required to be kept under the terms and conditions of this permit.

C. To inspect -- at reasonable times – any facilities, equipment (including monitoring and control equipment), practices, methods, or operations regulated or required under this permit.

D. To sample or monitor – at reasonable times – any substances or parameters at any location for purposes of assuring permit compliance or as otherwise authorized by the Clean Water Act.

G4. GENERAL PERMIT MODIFICATION AND REVOCATION

This permit may be modified, revoked and reissued, or terminated in accordance with the provisions of Chapter 173-226 WAC. Grounds for modification, revocation and reissuance, or termination include, but are not limited to, the following:

A. When a change occurs in the technology or practices for control or abatement of pollutants applicable to the category of dischargers covered under this permit.

B. When effluent limitation guidelines or standards are promulgated pursuant to the CWA or Chapter 90.48 RCW, for the category of dischargers covered under this permit.

C. When a water quality management plan containing requirements applicable to the category of dischargers covered under this permit is approved, or

D. When information is obtained that indicates cumulative effects on the environment from dischargers covered under this permit are unacceptable.

G5. REVOCATION OF COVERAGE UNDER THE PERMIT

Pursuant to Chapter 43.21B RCW and Chapter 173-226 WAC, the Director may terminate coverage for any discharger under this permit for cause. Cases where coverage may be terminated include, but are not limited to, the following:

A. Violation of any term or condition of this permit.

B. Obtaining coverage under this permit by misrepresentation or failure to disclose fully all relevant facts.

C. A change in any condition that requires either a temporary or permanent reduction or elimination of the permitted discharge.

D. Failure or refusal of the Permittee to allow entry as required in RCW 90.48.090.

E. A determination that the permitted activity endangers human health or the environment, or contributes to water quality standards violations.

F. Nonpayment of permit fees or penalties assessed pursuant to RCW 90.48.465 and Chapter 173-224 WAC.

G. Failure of the Permittee to satisfy the public notice requirements of WAC 173-226-130(5), when applicable.

The Director may require any discharger under this permit to apply for and obtain coverage under an individual permit or another more specific general permit. Permittees who have their coverage revoked for cause according to WAC 173-226-240 may request temporary coverage under this permit during the time an individual permit is being developed, provided the request is made within ninety (90) days from the time of revocation and is submitted along with a complete individual permit application form.

G6. REPORTING A CAUSE FOR MODIFICATION

The Permittee must submit a new application, or a supplement to the previous application, whenever a material change to the construction activity or in the quantity or type of discharge is anticipated which is not specifically authorized by this permit. This application must be submitted at least sixty (60) days prior to any proposed changes. Filing a request for a permit modification, revocation and reissuance, or termination, or a notification of planned changes or anticipated noncompliance does not relieve the Permittee of the duty to comply with the existing permit until it is modified or reissued.

G7. COMPLIANCE WITH OTHER LAWS AND STATUTES

Nothing in this permit will be construed as excusing the Permittee from compliance with any applicable federal, state, or local statutes, ordinances, or regulations.

G8. DUTY TO REAPPLY

The Permittee must apply for permit renewal at least 180 days prior to the specified expiration date of this permit.

G9. TRANSFER OF GENERAL PERMIT COVERAGE

Coverage under this general permit is automatically transferred to a new discharger, including operators of lots/parcels within a common plan of development or sale, **if:**

A. A written agreement (Transfer of Coverage Form) between the current discharger (Permittee) and new discharger, signed by both parties and containing a specific date for transfer of permit responsibility, coverage, and liability is submitted to the Director; and

B. The Director does not notify the current discharger and new discharger of the Director's intent to revoke coverage under the general permit. If this notice is not given, the transfer is effective on the date specified in the written agreement.

When a current discharger (Permittee) transfers a portion of a permitted site, the current discharger must also submit an updated application form (NOI) to the Director indicating the remaining permitted acreage after the transfer.

G10. REMOVED SUBSTANCES

The Permittee must not re-suspend or reintroduce collected screenings, grit, solids, sludges, filter backwash, or other pollutants removed in the course of treatment or control of stormwater to the final effluent stream for discharge to state waters.

G11. DUTY TO PROVIDE INFORMATION

The Permittee must submit to Ecology, within a reasonable time, all information that Ecology may request to determine whether cause exists for modifying, revoking and reissuing, or terminating this permit or to determine compliance with this permit. The Permittee must also submit to Ecology, upon request, copies of records required to be kept by this permit [40 CFR 122.41(h)].

G12. OTHER REQUIREMENTS OF 40 CFR

All other requirements of 40 CFR 122.41 and 122.42 are incorporated in this permit by reference.

G13. ADDITIONAL MONITORING

Ecology may establish specific monitoring requirements in addition to those contained in this permit by administrative order or permit modification.

G14. PENALTIES FOR VIOLATING PERMIT CONDITIONS

Any person who is found guilty of willfully violating the terms and conditions of this permit shall be deemed guilty of a crime, and upon conviction thereof shall be punished by a fine of up to ten thousand dollars ($10,000) and costs of prosecution, or by imprisonment in the discretion of the court. Each day upon which a willful violation occurs may be deemed a separate and additional violation.

Any person who violates the terms and conditions of a waste discharge permit shall incur, in addition to any other penalty as provided by law, a civil penalty in the amount of up to ten thousand dollars ($10,000) for every such violation. Each and every such violation shall be a separate and distinct offense, and in case of a continuing violation, every day's continuance shall be deemed to be a separate and distinct violation.

G15. UPSET

Definition – "Upset" means an exceptional incident in which there is unintentional and temporary noncompliance with technology-based permit effluent limitations because of factors beyond the reasonable control of the Permittee. An upset does not include noncompliance to the extent caused by operational error, improperly designed treatment facilities, inadequate treatment facilities, lack of preventive maintenance, or careless or improper operation.

An upset constitutes an affirmative defense to an action brought for noncompliance with such technology-based permit effluent limitations if the requirements of the following paragraph are met.

A Permittee who wishes to establish the affirmative defense of upset must demonstrate, through properly signed, contemporaneous operating logs or other relevant evidence that: 1) an upset occurred and that the Permittee can identify the cause(s) of the upset; 2) the permitted facility was being properly operated at the time of the upset; 3) the Permittee submitted notice of the upset as required in Special Condition S5.F, and; 4) the Permittee complied with any remedial measures required under this permit.

In any enforcement proceeding, the Permittee seeking to establish the occurrence of an upset has the burden of proof.

G16. PROPERTY RIGHTS

This permit does not convey any property rights of any sort, or any exclusive privilege.

G17. DUTY TO COMPLY

The Permittee must comply with all conditions of this permit. Any permit noncompliance constitutes a violation of the Clean Water Act and is grounds for enforcement action; for permit termination, revocation and reissuance, or modification; or denial of a permit renewal application.

G18. TOXIC POLLUTANTS

The Permittee must comply with effluent standards or prohibitions established under Section 307(a) of the Clean Water Act for toxic pollutants within the time provided in the regulations that establish those standards or prohibitions, even if this permit has not yet been modified to incorporate the requirement.

G19. PENALTIES FOR TAMPERING

The Clean Water Act provides that any person who falsifies, tampers with, or knowingly renders inaccurate any monitoring device or method required to be maintained under this permit shall, upon conviction, be punished by a fine of not more than $10,000 per violation, or by imprisonment for not more than two years per violation, or by both. If a conviction of a person is for a violation committed after a first conviction of such person under this condition, punishment shall be a fine of not more than $20,000 per day of violation, or imprisonment of not more than four (4) years, or both.

G20. REPORTING PLANNED CHANGES

The Permittee must, as soon as possible, give notice to Ecology of planned physical alterations, modifications or additions to the permitted construction activity. The Permittee should be aware that, depending on the nature and size of the changes to the original permit, a new public notice and other permit process requirements may be required. Changes in activities that require reporting to Ecology include those that will result in:

A. The permitted facility being determined to be a new source pursuant to 40 CFR 122.29(b).

B. A significant change in the nature or an increase in quantity of pollutants discharged, including but not limited to: for sites 5 acres or larger, a 20% or greater increase in acreage disturbed by construction activity.

C. A change in or addition of surface water(s) receiving stormwater or non-stormwater from the construction activity.

D. A change in the construction plans and/or activity that affects the Permittee's monitoring requirements in Special Condition S4.

Following such notice, permit coverage may be modified, or revoked and reissued pursuant to 40 CFR 122.62(a) to specify and limit any pollutants not previously limited. Until such modification is effective, any new or increased discharge in excess of permit limits or not specifically authorized by this permit constitutes a violation.

G21. REPORTING OTHER INFORMATION

Where the Permittee becomes aware that it failed to submit any relevant facts in a permit application, or submitted incorrect information in a permit application or in any report to Ecology, it must promptly submit such facts or information.

G22. REPORTING ANTICIPATED NON-COMPLIANCE

The Permittee must give advance notice to Ecology by submission of a new application or supplement thereto at least forty-five (45) days prior to commencement of such discharges, of any facility expansions, production increases, or other planned changes, such as process modifications, in the permitted facility or activity which may result in noncompliance with permit limits or conditions. Any maintenance of facilities, which might necessitate unavoidable interruption of operation and degradation of effluent quality, must be scheduled during non-critical water quality periods and carried out in a manner approved by Ecology.

G23. REQUESTS TO BE EXCLUDED FROM COVERAGE UNDER THE PERMIT

Any discharger authorized by this permit may request to be excluded from coverage under the general permit by applying for an individual permit. The discharger must submit to the Director an application as described in WAC 173-220-040 or WAC 173-216-070, whichever is applicable, with reasons supporting the request. These reasons will fully document how an individual permit will apply to the applicant in a way that the general permit cannot. Ecology may make specific requests for information to support the request. The Director will either issue an individual permit or deny the request with a statement explaining the reason for the denial. When an individual permit is issued to a discharger otherwise subject to the construction stormwater general permit, the applicability of the construction stormwater general permit to that Permittee is automatically terminated on the effective date of the individual permit.

G24. APPEALS

A. The terms and conditions of this general permit, as they apply to the appropriate class of dischargers, are subject to appeal by any person within 30 days of issuance of this general permit, in accordance with Chapter 43.21B RCW, and Chapter 173-226 WAC.

B. The terms and conditions of this general permit, as they apply to an individual discharger, are appealable in accordance with Chapter 43.21B RCW within 30 days of the effective date of coverage of that discharger. Consideration of an appeal of general permit coverage of an individual discharger is limited to the general permit's applicability or nonapplicability to that individual discharger.

C. The appeal of general permit coverage of an individual discharger does not affect any other dischargers covered under this general permit. If the terms and conditions of this general permit are found to be inapplicable to any individual discharger(s), the matter

shall be remanded to Ecology for consideration of issuance of an individual permit or permits.

G25. SEVERABILITY

The provisions of this permit are severable, and if any provision of this permit, or application of any provision of this permit to any circumstance, is held invalid, the application of such provision to other circumstances, and the remainder of this permit shall not be affected thereby.

G26. BYPASS PROHIBITED

A. Bypass Procedures

Bypass, which is the intentional diversion of waste streams from any portion of a treatment facility, is prohibited for stormwater events below the design criteria for stormwater management. Ecology may take enforcement action against a Permittee for bypass unless one of the following circumstances (1, 2, 3 or 4) is applicable.

1. Bypass of stormwater is consistent with the design criteria and part of an approved management practice in the applicable stormwater management manual.

2. Bypass for essential maintenance without the potential to cause violation of permit limits or conditions.

   Bypass is authorized if it is for essential maintenance and does not have the potential to cause violations of limitations or other conditions of this permit, or adversely impact public health.

3. Bypass of stormwater is unavoidable, unanticipated, and results in noncompliance of this permit.

   This bypass is permitted only if:

   a. Bypass is unavoidable to prevent loss of life, personal injury, or severe property damage. "Severe property damage" means substantial physical damage to property, damage to the treatment facilities which would cause them to become inoperable, or substantial and permanent loss of natural resources which can reasonably be expected to occur in the absence of a bypass.

   b. There are no feasible alternatives to the bypass, such as the use of auxiliary treatment facilities, retention of untreated wastes, maintenance during normal periods of equipment downtime (but not if adequate backup equipment should have been installed in the exercise of reasonable engineering judgment to prevent a bypass which occurred during normal periods of equipment downtime or preventative maintenance), or transport of untreated wastes to another treatment facility.

c. Ecology is properly notified of the bypass as required in Special Condition S5.F of this permit.

4. A planned action that would cause bypass of stormwater and has the potential to result in noncompliance of this permit during a storm event.

   The Permittee must notify Ecology at least thirty (30) days before the planned date of bypass. The notice must contain:

   a. a description of the bypass and its cause

   b. an analysis of all known alternatives which would eliminate, reduce, or mitigate the need for bypassing.

   c. a cost-effectiveness analysis of alternatives including comparative resource damage assessment.

   d. the minimum and maximum duration of bypass under each alternative.

   e. a recommendation as to the preferred alternative for conducting the bypass.

   f. the projected date of bypass initiation.

   g. a statement of compliance with SEPA.

   h. a request for modification of water quality standards as provided for in WAC 173-201A-110, if an exceedance of any water quality standard is anticipated.

   i. steps taken or planned to reduce, eliminate, and prevent reoccurrence of the bypass.

5. For probable construction bypasses, the need to bypass is to be identified as early in the planning process as possible. The analysis required above must be considered during preparation of the Stormwater Pollution Prevention Plan (SWPPP) and must be included to the extent practical. In cases where the probable need to bypass is determined early, continued analysis is necessary up to and including the construction period in an effort to minimize or eliminate the bypass.

   Ecology will consider the following before issuing an administrative order for this type bypass:

   a. If the bypass is necessary to perform construction or maintenance-related activities essential to meet the requirements of this permit.

   b. If there are feasible alternatives to bypass, such as the use of auxiliary treatment facilities, retention of untreated wastes, stopping production, maintenance during normal periods of equipment down time, or transport of untreated wastes to another treatment facility.

   c. If the bypass is planned and scheduled to minimize adverse effects on the public and the environment.

After consideration of the above and the adverse effects of the proposed bypass and any other relevant factors, Ecology will approve, conditionally approve, or deny the request. The public must be notified and given an opportunity to comment on bypass incidents of significant duration, to the extent feasible. Approval of a request to bypass will be by administrative order issued by Ecology under RCW 90.48.120.

B. Duty to Mitigate

The Permittee is required to take all reasonable steps to minimize or prevent any discharge or sludge use or disposal in violation of this permit that has a reasonable likelihood of adversely affecting human health or the environment.

APPENDIX A – DEFINITIONS

AKART is an acronym for "all known, available, and reasonable methods of prevention, control, and treatment." AKART represents the most current methodology that can be reasonably required for preventing, controlling, or abating the pollutants and controlling pollution associated with a discharge.

Applicable TMDL means a TMDL for turbidity, fine sediment, high pH, or phosphorus, which was completed and approved by EPA before January 1, 2011, or before the date the operator's complete permit application is received by Ecology, whichever is later.

Applicant means an operator seeking coverage under this permit.

Best Management Practices (BMPs) means schedules of activities, prohibitions of practices, maintenance procedures, and other physical, structural and/or managerial practices to prevent or reduce the pollution of waters of the State. BMPs include treatment systems, operating procedures, and practices to control: stormwater associated with construction activity, spillage or leaks, sludge or waste disposal, or drainage from raw material storage.

Buffer means an area designated by a local jurisdiction that is contiguous to and intended to protect a sensitive area.

Bypass means the intentional diversion of waste streams from any portion of a treatment facility.

Calendar Day A period of 24 consecutive hours starting at 12:00 midnight and ending the following 12:00 midnight.

Calendar Week (same as Week) means a period of seven consecutive days starting at 12:01 a.m. (0:01 hours) on Sunday.

Certified Erosion and Sediment Control Lead (CESCL) means a person who has current certification through an approved erosion and sediment control training program that meets the minimum training standards established by Ecology (see BMP C160 in the SWMM).

Clean Water Act (CWA) means the Federal Water Pollution Control Act enacted by Public Law 92-500, as amended by Public Laws 95-217, 95-576, 96-483, and 97-117; USC 1251 et seq.

Combined Sewer means a sewer which has been designed to serve as a sanitary sewer and a storm sewer, and into which inflow is allowed by local ordinance.

Common Plan of Development or Sale means a site where multiple separate and distinct construction activities may be taking place at different times on different schedules and/or by different contractors, but still under a single plan. Examples include: 1) phased projects and projects with multiple filings or lots, even if the separate phases or filings/lots will be constructed under separate contract or by separate owners (e.g., a development where lots are sold to separate builders); 2) a development plan that may be phased over multiple years, but is still under a

consistent plan for long-term development; 3) projects in a contiguous area that may be unrelated but still under the same contract, such as construction of a building extension and a new parking lot at the same facility; and 4) linear projects such as roads, pipelines, or utilities. If the project is part of a common plan of development or sale, the disturbed area of the entire plan must be used in determining permit requirements.

Composite Sample means a mixture of grab samples collected at the same sampling point at different times, formed either by continuous sampling or by mixing discrete samples. May be "time-composite" (collected at constant time intervals) or "flow-proportional" (collected either as a constant sample volume at time intervals proportional to stream flow, or collected by increasing the volume of each aliquot as the flow increases while maintaining a constant time interval between the aliquots.

Concrete wastewater means any water used in the production, pouring and/or clean-up of concrete or concrete products, and any water used to cut, grind, wash, or otherwise modify concrete or concrete products. Examples include water used for or resulting from concrete truck/mixer/pumper/tool/chute rinsing or washing, concrete saw cutting and surfacing (sawing, coring, grinding, roughening, hydro-demolition, bridge and road surfacing). When stormwater comingles with concrete wastewater, the resulting water is considered concrete wastewater and must be managed to prevent discharge to waters of the state, including ground water.

Construction Activity means land disturbing operations including clearing, grading or excavation which disturbs the surface of the land. Such activities may include road construction, construction of residential houses, office buildings, or industrial buildings, and demolition activity.

Contaminant means any hazardous substance that does not occur naturally or occurs at greater than natural background levels. See definition of "hazardous substance" and WAC 173-340-200.

Demonstrably Equivalent means that the technical basis for the selection of all stormwater BMPs is documented within a SWPPP, including:

1. The method and reasons for choosing the stormwater BMPs selected.
2. The pollutant removal performance expected from the BMPs selected.
3. The technical basis supporting the performance claims for the BMPs selected, including any available data concerning field performance of the BMPs selected.
4. An assessment of how the selected BMPs will comply with state water quality standards.
5. An assessment of how the selected BMPs will satisfy both applicable federal technology-based treatment requirements and state requirements to use all known, available, and reasonable methods of prevention, control, and treatment (AKART).

Department means the Washington State Department of Ecology.

Detention means the temporary storage of stormwater to improve quality and/or to reduce the mass flow rate of discharge.

Dewatering means the act of pumping ground water or stormwater away from an active construction site.

Director means the Director of the Washington Department of Ecology or his/her authorized representative.

Discharger means an owner or operator of any facility or activity subject to regulation under Chapter 90.48 RCW or the Federal Clean Water Act.

Domestic Wastewater means water carrying human wastes, including kitchen, bath, and laundry wastes from residences, buildings, industrial establishments, or other places, together with such ground water infiltration or surface waters as may be present.

Ecology means the Washington State Department of Ecology.

Engineered Soils means the use of soil amendments including, but not limited, to Portland cement treated base (CTB), cement kiln dust (CKD), or fly ash to achieve certain desirable soil characteristics.

Equivalent BMPs means operational, source control, treatment, or innovative BMPs which result in equal or better quality of stormwater discharge to surface water or to ground water than BMPs selected from the SWMM.

Erosion means the wearing away of the land surface by running water, wind, ice, or other geological agents, including such processes as gravitational creep.

Erosion and Sediment Control BMPs means BMPs intended to prevent erosion and sedimentation, such as preserving natural vegetation, seeding, mulching and matting, plastic covering, filter fences, sediment traps, and ponds. Erosion and sediment control BMPs are synonymous with stabilization and structural BMPs.

Final Stabilization (same as fully stabilized or full stabilization) means the establishment of a permanent vegetative cover, or equivalent permanent stabilization measures (such as riprap, gabions or geotextiles) which prevents erosion.

Ground Water means water in a saturated zone or stratum beneath the land surface or a surface water body.

Hazardous Substance means any dangerous or extremely hazardous waste as defined in RCW 70.105.010 (5) and (6), or any dangerous or extremely dangerous waste as designated by rule under chapter 70.105 RCW; any hazardous sub-stance as defined in RCW 70.105.010(14) or any hazardous substance as defined by rule under chapter 70.105 RCW; any substance that, on the effective date of this section, is a hazardous substance under section 101(14) of the federal cleanup law, 42 U.S.C., Sec. 9601(14); petroleum or petroleum products; and any substance or category of substances, including solid waste decomposition products, determined by the director

by rule to present a threat to human health or the environment if released into the environment. The term hazardous substance does not include any of the following when contained in an underground storage tank from which there is not a release: crude oil or any fraction thereof or petroleum, if the tank is in compliance with all applicable federal, state, and local law.

Injection Well means a well that is used for the subsurface emplacement of fluids. (See Well.)

Jurisdiction means a political unit such as a city, town or county; incorporated for local self-government.

National Pollutant Discharge Elimination System (NPDES) means the national program for issuing, modifying, revoking and reissuing, terminating, monitoring, and enforcing permits, and imposing and enforcing pretreatment requirements, under sections 307, 402, 318, and 405 of the Federal Clean Water Act, for the discharge of pollutants to surface waters of the State from point sources. These permits are referred to as NPDES permits and, in Washington State, are administered by the Washington Department of Ecology.

Notice of Intent (NOI) means the application for, or a request for coverage under this general permit pursuant to WAC 173-226-200.

Notice of Termination (NOT) means a request for termination of coverage under this general permit as specified by Special Condition S10 of this permit.

Operator means any party associated with a construction project that meets either of the following two criteria:

- The party has operational control over construction plans and specifications, including the ability to make modifications to those plans and specifications; or
- The party has day-to-day operational control of those activities at a project that are necessary to ensure compliance with a SWPPP for the site or other permit conditions (e.g., they are authorized to direct workers at a site to carry out activities required by the SWPPP or comply with other permit conditions).

Permittee means individual or entity that receives notice of coverage under this general permit.

pH means a liquid's measure of acidity or alkalinity. A pH of 7 is defined as neutral. Large variations above or below this value are considered harmful to most aquatic life.

pH monitoring period means the time period in which the pH of stormwater runoff from a site must be tested a minimum of once every seven days to determine if stormwater pH is between 6.5 and 8.5.

Point source means any discernible, confined, and discrete conveyance, including but not limited to, any pipe, ditch, channel, tunnel, conduit, well, discrete fissure, and container from which pollutants are or may be discharged to surface waters of the State. This term does not include return flows from irrigated agriculture. (See Fact Sheet for further explanation.)

Pollutant means dredged spoil, solid waste, incinerator residue, filter backwash, sewage, garbage, domestic sewage sludge (biosolids), munitions, chemical wastes, biological materials, radioactive materials, heat, wrecked or discarded equipment, rock, sand, cellar dirt, and industrial, municipal, and agricultural waste. This term does not include sewage from vessels within the meaning of section 312 of the CWA, nor does it include dredged or fill material discharged in accordance with a permit issued under section 404 of the CWA.

Pollution means contamination or other alteration of the physical, chemical, or biological properties of waters of the State; including change in temperature, taste, color, turbidity, or odor of the waters; or such discharge of any liquid, gaseous, solid, radioactive or other substance into any waters of the State as will or is likely to create a nuisance or render such waters harmful, detrimental or injurious to the public health, safety or welfare; or to domestic, commercial, industrial, agricultural, recreational, or other legitimate beneficial uses; or to livestock, wild animals, birds, fish or other aquatic life.

Process wastewater means any water which, during manufacturing or processing, comes into direct contact with or results from the production or use of any raw material, intermediate product, finished product, byproduct, or waste product (40 CFR 122.1).

Receiving water means the water body at the point of discharge. If the discharge is to a storm sewer system, either surface or subsurface, the receiving water is the water body to which the storm system discharges. Systems designed primarily for other purposes such as for ground water drainage, redirecting stream natural flows, or for conveyance of irrigation water/return flows that coincidentally convey stormwater are considered the receiving water.

Representative means a stormwater or wastewater sample which represents the flow and characteristics of the discharge. Representative samples may be a grab sample, a time-proportionate composite sample, or a flow proportionate sample. Ecology's Construction Stormwater Monitoring Manual provides guidance on representative sampling.

Sanitary sewer means a sewer which is designed to convey domestic wastewater.

Sediment means the fragmented material that originates from the weathering and erosion of rocks or unconsolidated deposits, and is transported by, suspended in, or deposited by water.

Sedimentation means the depositing or formation of sediment.

Sensitive area means a water body, wetland, stream, aquifer recharge area, or channel migration zone.

SEPA (State Environmental Policy Act) means the Washington State Law, RCW 43.21C.020, intended to prevent or eliminate damage to the environment.

Significant Amount means an amount of a pollutant in a discharge that is amenable to available and reasonable methods of prevention or treatment; or an amount of a pollutant that has a

reasonable potential to cause a violation of surface or ground water quality or sediment management standards.

Significant concrete work means greater than 1000 cubic yards poured concrete or recycled concrete over the life of a project.

Significant Contributor of Pollutants means a facility determined by Ecology to be a contributor of a significant amount(s) of a pollutant(s) to waters of the State of Washington.

Site means the land or water area where any "facility or activity" is physically located or conducted.

Source control BMPs means physical, structural or mechanical devices or facilities that are intended to prevent pollutants from entering stormwater. A few examples of source control BMPs are erosion control practices, maintenance of stormwater facilities, constructing roofs over storage and working areas, and directing wash water and similar discharges to the sanitary sewer or a dead end sump.

Stabilization means the application of appropriate BMPs to prevent the erosion of soils, such as, temporary and permanent seeding, vegetative covers, mulching and matting, plastic covering and sodding. See also the definition of Erosion and Sediment Control BMPs.

Storm drain means any drain which drains directly into a storm sewer system, usually found along roadways or in parking lots.

Storm sewer system means a means a conveyance, or system of conveyances (including roads with drainage systems, municipal streets, catch basins, curbs, gutters, ditches, manmade channels, or storm drains designed or used for collecting or conveying stormwater. This does not include systems which are part of a combined sewer or Publicly Owned Treatment Works (POTW) as defined at 40 CFR 122.2.

Stormwater means that portion of precipitation that does not naturally percolate into the ground or evaporate, but flows via overland flow, interflow, pipes, and other features of a stormwater drainage system into a defined surface water body, or a constructed infiltration facility.

Stormwater Management Manual (SWMM) or Manual means the technical Manual published by Ecology for use by local governments that contain descriptions of and design criteria for BMPs to prevent, control, or treat pollutants in stormwater.

Stormwater Pollution Prevention Plan (SWPPP) means a documented plan to implement measures to identify, prevent, and control the contamination of point source discharges of stormwater.

Surface Waters of the State includes lakes, rivers, ponds, streams, inland waters, salt waters, and all other surface waters and water courses within the jurisdiction of the state of Washington.

Temporary Stabilization means the exposed ground surface has been covered with appropriate materials to provide temporary stabilization of the surface from water or wind erosion. Materials include, but are not limited to, mulch, riprap, erosion control mats or blankets and temporary cover crops. Seeding alone is not considered stabilization. Temporary stabilization is not a substitute for the more permanent "final stabilization."

Total Maximum Daily Load (TMDL) means a calculation of the maximum amount of a pollutant that a water body can receive and still meet state water quality standards. Percentages of the total maximum daily load are allocated to the various pollutant sources. A TMDL is the sum of the allowable loads of a single pollutant from all contributing point and nonpoint sources. The TMDL calculations must include a "margin of safety" to ensure that the water body can be protected in case there are unforeseen events or unknown sources of the pollutant. The calculation must also account for seasonable variation in water quality.

Treatment BMPs means BMPs that are intended to remove pollutants from stormwater. A few examples of treatment BMPs are detention ponds, oil/water separators, biofiltration, and constructed wetlands.

Transparency means a measurement of water clarity in centimeters (cm), using a 60 cm transparency tube. The transparency tube is used to estimate the relative clarity or transparency of water by noting the depth at which a black and white Secchi disc becomes visible when water is released from a value in the bottom of the tube. A transparency tube is sometimes referred to as a "turbidity tube."

Turbidity means the clarity of water expressed as nephelometric turbidity units (NTU) and measured with a calibrated turbidimeter.

Uncontaminated means free from any contaminant, as defined in MTCA cleanup regulations. See definition of "contaminant" and WAC 173-340-200.

Waste Load Allocation (WLA) means the portion of a receiving water's loading capacity that is allocated to one of its existing or future point sources of pollution. WLAs constitute a type of water quality based effluent limitation (40 CFR 130.2[h]).

Water quality means the chemical, physical, and biological characteristics of water, usually with respect to its suitability for a particular purpose.

Waters of the State includes those waters as defined as "waters of the United States" in 40 CFR Subpart 122.2 within the geographic boundaries of Washington State and "waters of the State" as defined in Chapter 90.48 RCW, which include lakes, rivers, ponds, streams, inland waters, underground waters, salt waters, and all other surface waters and water courses within the jurisdiction of the state of Washington.

Well means a bored, drilled or driven shaft, or dug hole whose depth is greater than the largest surface dimension. (See Injection well.)

Wheel wash wastewater means any water used in, or resulting from the operation of, a tire bath or wheel wash (BMP C106: Wheel Wash), or other structure or practice that uses water to physically remove mud and debris from vehicles leaving a construction site and prevent track-out onto roads. When stormwater comingles with wheel wash wastewater, the resulting water is considered wheel wash wastewater and must be managed according to Special Condition S9.D.9.

APPENDIX B – ACRONYMS

AKART	All Known, Available, and Reasonable Methods of Prevention, Control, and Treatment
BMP	Best Management Practice
CESCL	Certified Erosion and Sediment Control Lead
CFR	Code of Federal Regulations
CKD	Cement Kiln Dust
cm	Centimeters
CTB	Cement-Treated Base
CWA	Clean Water Act
DMR	Discharge Monitoring Report
EPA	Environmental Protection Agency
ESC	Erosion and Sediment Control
FR	Federal Register
NOI	Notice of Intent
NOT	Notice of Termination
NPDES	National Pollutant Discharge Elimination System
NTU	Nephelometric Turbidity Unit
RCW	Revised Code of Washington
SEPA	State Environmental Policy Act
SWMM	Stormwater Management Manual
SWPPP	Stormwater Pollution Prevention Plan
TMDL	Total Maximum Daily Load
UIC	Underground Injection Control
USC	United States Code
USEPA	United States Environmental Protection Agency
WAC	Washington Administrative Code
WQ	Water Quality
WWHM	Western Washington Hydrology Model

APPENDIX H
HPA
(This Page Intentionally Left Blank)

Washington Department of FISH and WILDLIFE

HYDRAULIC PROJECT APPROVAL

RCW 77.55.021 - See appeal process at end of HPA

North Puget Sound
16018 Mill Creek Boulevard
Mill Creek, WA 98012-1296
(425) 775-1311

Issue Date: March 27, 2012
Project Expiration Date: October 15, 2014

Control Number: 126519-1
FPA/Public Notice #: N/A

PERMITTEE	AUTHORIZED AGENT OR CONTRACTOR
City of Ferndale	Widener and Associates
ATTENTION: Janice Marlega	ATTENTION: Ross Widener
PO Box 936	10108 32nd Ave W Ste D
Ferndale, WA 98248	Everett, WA 98204
360-384-4006	425-348-3059
Fax: 360-384-5189	Fax: 425-348-3124

Project Name: Main Street-Church Road Improvements Project

Project Description: Installation of a 4-sided 14x6.5 foot box culvert to replace an existing fish passage barrier culvert (ID 370636) and a new stormwater outfall.

PROVISIONS

1. TIMING LIMITATIONS: The project may begin July 15, 2012 and shall be completed by October 15, 2014; Provided: Work shall not occur on or between October 16 and July 14.

2. NOTIFICATION REQUIREMENT: The Area Habitat Biologist (AHB) listed below shall receive written notification (FAX, email, or mail) from the person to whom this Hydraulic Project Approval (HPA) is issued (permittee) or the agent/contractor no less than three working days prior to the start of construction activities. The notification shall include the permittee's name, project location, starting date for work, and the control number for this HPA.

3. If at any time, as a result of project activities, fish are observed in distress, a fish kill occurs, or water quality problems develop (including equipment leaks or spills), immediate notification shall be made to the Washington Military Department's Emergency Management Division at 1-800-258-5990, and to the Area Habitat Biologist listed below.

4. Work shall be accomplished per plans and specifications approved by the Washington Department of Fish and Wildlife entitled JARPA and signed January 5, 2012, except as modified by this Hydraulic Project Approval. A copy of these plans and this HPA shall be available on site during construction.

BY-PASS

5. The permittee shall capture and safely move food fish, game fish, and other fish life from the job site. The permittee shall have fish capture and transportation equipment ready and on the job site. Captured fish shall be immediately and safely transferred to free-flowing water downstream of the project site.

6. A temporary bypass to divert flow around the work area shall be in place prior to initiation of other work in the wetted perimeter.

7. A sandbag revetment or similar device shall be installed at the bypass inlet to divert the entire flow through the bypass.

8. A sandbag revetment or similar device shall be installed at the downstream end of the bypass to prevent backwater from entering the work area.

9. The bypass shall be of sufficient size to pass all flows and debris for the duration of the project.

10. Prior to releasing the water flow to the project area, all bank protection or armoring shall be completed.

11. Upon completion of the project, all material used in the temporary bypass shall be removed from the site and the site returned to preproject or improved conditions.

12. Any device used for diverting water from a fish-bearing stream shall be equipped with a fish guard to prevent passage of fish into the diversion device pursuant to RCW 77.57.010 and 77.57.070. The pump intake shall be screened as follows to prevent fish from entering the system. : a) Perforated Plate: 0.094 inch (maximum opening diameter). b) Profile Bar: 0.069 inch (maximum width opening). c) Woven Wire: 0.087 inch (maximum opening in the narrow direction). d) The minimum open area for all types of fish guards is 27%. The screened intake shall consist of a facility with enough surface area to ensure that the velocity through the screen is less than 0.4 feet per second. Screen maintenance shall be adequate to prevent injury or entrapment to juvenile fish and the screen shall remain in place whenever water is withdrawn from the stream through the pump intake.

CULVERT

13. The culvert shall be installed in the dry or in isolation from the stream flow by the installation of a bypass flume or culvert, or by pumping the stream flow around the work area.

14. The culvert shall be backfilled to match existing upstream and downstream elevations with material composed of clean, rounded, uniformly-graded gravel as specified in the plans (Sheet 31.2, dated 3/19/2012).

15. The culvert width shall be at least 14 feet.

16. The culvert shall be installed to maintain structural integrity to the 100-year peak flow with consideration of the debris likely to be encountered.

17. Fill associated with the culvert installation shall be protected from erosion to the 100-year peak flow.

18. The culvert shall be installed and maintained to avoid inlet scouring and to prevent erosion of stream banks downstream of the project.

19. The culvert facility shall be maintained by the owner(s) per RCW 77.57.030 to ensure continued, unimpeded fish passage. If the structure becomes a hindrance to fish passage, the owner(s) shall be responsible for obtaining an Hydraulic Project Approval and providing prompt

repair. Financial responsibility for maintenance and repairs shall be that of the owner(s).

20. Disturbance of the streambed and banks shall be limited to that necessary to place the culvert and any required channel modification associated with it.

21. Approach material shall be structurally stable and be composed of material that, if eroded into the stream, shall not be detrimental to fish life.

EQUIPMENT RELATED

22. Equipment used for this project may operate below the ordinary high water line, provided the drive mechanisms (wheels, tracks, tires, etc.) shall not enter or operate below the ordinary high water line.

23. Equipment used for this project shall be free of external petroleum-based products while working around the stream. Equipment shall be checked daily for leaks and any necessary repairs shall be completed prior to commencing work activities along the stream.

24. Equipment crossings of the stream are not authorized by this HPA.

25. The permitee shall ensure that WDFW protocols for controlling the spread of invasive species are implemented during the course of the project.

OUTFALL

26. The outfall structure shall be constructed to prevent the entry of fish.

27. Excavation for the placement of the structure or armoring materials shall be isolated from the wetted perimeter, and located upland from the ordinary high water line, which shall be clearly marked in the field prior to construction.

RE-VEGETATION

28. Alteration or disturbance of the bank and bank vegetation shall be limited to that necessary to construct the project. Within seven calendar days of project completion, all disturbed areas shall be protected from erosion using vegetation or other means. By November 30 of the year of construction, all disturbed and exposed areas within the work site stream buffer shall be re-vegetated with native woody species. Vegetative cuttings, bare root, or potted plants shall be planted at a maximum interval of three feet (on center) and maintained as necessary for three years to ensure 80 percent survival.

WATER QUALITY RELATED

29. Every effort shall be taken during all phases of this project to ensure that sediment-laden water is not allowed to enter the stream.

30. Erosion control methods shall be used to prevent silt-laden water from entering the stream. These may include, but are not limited to, straw bales, filter fabric, temporary sediment ponds, check dams of pea gravel-filled burlap bags or other material, and/or immediate mulching of

exposed areas.

31. Wastewater from project activities and water removed from within the work area shall be routed to an area landward of the ordinary high water line to allow removal of fine sediment and other contaminants prior to being discharged to the stream.

32. All waste material such as construction debris, silt, excess dirt or overburden resulting from this project shall be deposited above the limits of flood water in an approved upland disposal site.

33. If high flow conditions that may cause siltation are encountered during this project, work shall stop until the flow subsides.

34. Extreme care shall be taken to ensure that no petroleum products, hydraulic fluid, fresh cement, sediments, sediment-laden water, chemicals, or any other toxic or deleterious materials are allowed to enter or leach into the stream.

35. Fresh concrete or concrete by-products shall not be allowed to enter the stream at any time during this project. All forms used for concrete shall be completely sealed to prevent the possibility of fresh concrete from getting into the stream.

PROJECT LOCATIONS

Location #1 Schell Creek

WORK START: June 15, 2012					WORK END: October 15, 2014	
WRIA: 01.0116	Waterbody: Drainage Ditch (rb)				Tributary to: Lummi River	
1/4 SEC: SW 1/4	Section: 19	Township: 39 N	Range: 02 E	Latitude: N 48.84835	Longitude: W 122.60807	County: Whatcom
Location #1 Driving Directions: From 1-5 take exit #262 for Main Street toward City Center. Follow Main Street west to Douglas Road, and just beyond to the crossing.						

Location #2 Schell Creek

WORK START: June 15, 2012					WORK END: October 15, 2014	
WRIA: 01.0116	Waterbody: Drainage Ditch (rb)				Tributary to: Lummi River	
1/4 SEC: SW 1/4	Section: 30	Township: 39 N	Range: 02 E	Latitude: N 48.8419	Longitude: W 122.60745	County: Whatcom
Location #2 Driving Directions: From 1-5 take exit #262 for Main Street toward City Center. Follow Main Street west to Douglas Road, and just beyond to the crossing.						

APPLY TO ALL HYDRAULIC PROJECT APPROVALS

This Hydraulic Project Approval pertains only to those requirements of the Washington State Hydraulic Code, specifically Chapter 77.55 RCW (formerly RCW 77.20). Additional authorization from other public agencies may be necessary for this project. The person(s) to whom this Hydraulic Project Approval is issued is responsible for applying for and obtaining any additional authorization from other public agencies (local, state and/or federal) that may be necessary for this project.

This Hydraulic Project Approval shall be available on the job site at all times and all its provisions followed by the person(s) to whom this Hydraulic Project Approval is issued and operator(s) performing the work.

This Hydraulic Project Approval does not authorize trespass.

The person(s) to whom this Hydraulic Project Approval is issued and operator(s) performing the work may be held liable for any loss or damage to fish life or fish habitat that results from failure to comply with the provisions of this Hydraulic Project Approval.

Failure to comply with the provisions of this Hydraulic Project Approval could result in a civil penalty of up to one hundred dollars per day and/or a gross misdemeanor charge, possibly punishable by fine and/or imprisonment.

All Hydraulic Project Approvals issued under RCW 77.55.021 are subject to additional restrictions, conditions, or revocation if the Department of Fish and Wildlife determines that changed conditions require such action. The person(s) to whom this Hydraulic Project Approval is issued has the right to appeal those decisions. Procedures for filing appeals are listed below.

Requests for any change to an unexpired HPA must be made in writing. Requests for new HPAs must be made by submitting a new complete application. Send your requests to the department by: mail to the Washington Department of Fish and Wildlife, Habitat Program, 600 Capitol Way North, Olympia, Washington 98501-1091; e-mail to HPAapplications@dfw.wa.gov; fax to (360) 902-2946; or hand-delivery to the Natural Resources Building, 1111 Washington St SE, Habitat Program, Fifth floor.

APPEALS INFORMATION

If you wish to appeal the issuance, denial, conditioning, or modification of a Hydraulic Project Approval (HPA), Washington Department of Fish and Wildlife (WDFW) recommends that you first contact the department employee who issued or denied the HPA to discuss your concerns. Such a discussion may resolve your concerns without the need for further appeal action. If you proceed with an appeal, you may request an informal or formal appeal. WDFW encourages you to take advantage of the informal appeal process before initiating a formal appeal. The informal appeal process includes a review by department management of the HPA or denial and often resolves issues faster and with less legal complexity than the formal appeal process. If the informal appeal process does not resolve your concerns, you may advance your appeal to the formal process. You may contact the HPA Appeals Coordinator at (360) 902-2534 for more information.

A. INFORMAL APPEALS: WAC 220-110-340 is the rule describing how to request an informal appeal of WDFW actions taken under Chapter 77.55 RCW. Please refer to that rule for complete informal appeal procedures. The following information summarizes that rule.

A person who is aggrieved by the issuance, denial, conditioning, or modification of an HPA may request an informal appeal of that action. You must send your request to WDFW by mail to the Washington Department of Fish and Wildlife HPA Appeals Coordinator, 600 Capitol Way North, Olympia, Washington 98501-1091; e-mail to HPAapplications@dfw.wa.gov; fax to (360) 902-2946; or hand-delivery to the Natural Resources Building, 1111 Washington St SE, Habitat Program, Fifth floor. WDFW must receive your request within 30 days from the date you receive notice of the decision. If you agree, and you applied for the HPA, resolution of the appeal may be facilitated through an informal conference with the WDFW employee responsible for the decision and a supervisor. If a resolution is not reached through the informal conference, or you are not the person who applied for the HPA, the HPA Appeals Coordinator or designee will conduct an informal hearing and recommend a decision to the Director or designee. If you are not satisfied with the results of the informal appeal, you may file a request for a formal appeal.

B. FORMAL APPEALS: WAC 220-110-350 is the rule describing how to request a formal appeal of WDFW actions taken under Chapter 77.55 RCW. Please refer to that rule for complete formal appeal procedures. The following information summarizes that rule.

A person who is aggrieved by the issuance, denial, conditioning, or modification of an HPA may request a formal appeal of that action. You must send your request for a formal appeal to the clerk of the Pollution Control Hearings Boards and serve a copy on WDFW within 30 days from the date you receive notice of the decision. You may serve WDFW by mail to the Washington Department of Fish and Wildlife HPA Appeals Coordinator, 600 Capitol Way North, Olympia, Washington 98501-1091; e-mail to HPAapplications@dfw.wa.gov; fax to (360) 902-2946; or hand-delivery to the Natural Resources Building, 1111 Washington St SE, Habitat Program, Fifth floor. The time period for requesting a formal appeal is suspended during consideration of a timely informal appeal. If there has been an informal appeal, you may request a formal appeal within 30 days from the date you receive the Director's or designee's written decision in response to the informal appeal.

C. FAILURE TO APPEAL WITHIN THE REQUIRED TIME PERIODS: If there is no timely request for an appeal, the WDFW action shall be final and unappealable.

ENFORCEMENT: Sergeant Phillips (37) P2

Habitat Biologist Jeffrey Kamps	kampsjwk@dfw.wa.gov 360-466-4345		for Director WDFW

CC: