WASHINGTON ST. VISTA DR. TO THIRD AVENUE IMPROVEMENT PROJECT

FERNDALE, WASHINGTON

CITY OF FERNDALE - PROJECT NO. ST 2014-04

TIB PROJECT NO. 8-2-985(008)-1

VICINITY MAP

PROJECT LOCATED IN SECTION 20, TOWNSHIP 39N, RANGE 2E, W.M.

SHEET SERIES INDEX

SHEET	DESCRIPTION
1	COVER
2	LEGEND AND ABBREVIATIONS
3	EXISTING CONDITIONS
4	TESC AND DEMO PLAN STA 0+00 – 6+00
5	TESC AND DEMO PLAN STA 6+00 – 12+00
6	TRAFFIC DETOUR PLAN
7	STORM PLAN AND PROFILE STA 0+50 – 6+00
8	STORM PLAN AND PROFILE STA 6+00 – 11+50
9	WATER PLAN AND PROFILE STA 1+25 – 6+00
10	WATER PLAN AND PROFILE STA 6+00 – 11+50
11	TYPICAL SECTIONS
12	CHANNELIZATION AND PAVING PLAN
13	GRADING PLAN
14	DETAILS
15	DETAILS
16	CROSS SECTIONS STA 1+00 – 6+50
17	CROSS SECTIONS STA 7+00 – 11+00
TS1	RECTANGULAR RAPID FLASH BEACON PLAN
TS2	RRFB ASSEMBLY DETAIL
TS3	RRFB ASSEMBLY FOUNDATION DETAIL

BID SET

DESIGNED BY KEC
DRAWN BY PJC
CHECKED BY LP

R&E Reichhardt & Ebe ENGINEERING INC
P.O. Box 978 | 423 Front Street, Lynden, WA 98264 (360) 354-3687
813 Metcalf Street, Sedro-Woolley, WA 98284 (360) 855-1713

NO.	DATE	DESCRIPTION	BY

CITY OF FERNDALE
2095 MAIN STREET
FERNDALE, WA 98248

WASHINGTON STREET
VISTA DR. TO THIRD AVENUE PROJECT
COVER

DWG 15036 PROBASE
JOB# 15036
SCALE H: N/A V: N/A
DATE 5/10/2016
SHEET 1 of 17

ABBREVIATIONS

ø	= DIAMETER	EX, EXIST	= EXISTING	MON	= MONUMENT	SCH	= SCHEDULE
AC	= ASBESTOS CEMENT	IR	= EXISTING IRRIGATION	MPOC	= MID-POINT ON CURVE	SD	= STORM DRAIN
AD	= ALGEBRAIC DIFFERENCE	F&C	= FRAME AND COVER	MTR	= METER	SDCB	= STORM DRAIN CATCH BASIN
ASPH	= ASPHALT	F&G	= FRAME AND GRATE	MW	= MONITORING WELL	SDMH	= STORM DRAIN MANHOLE
BLDG	= BUILDING	FF	= FINISHED FLOOR	N	= NORTH	SE	= SOUTHEAST
BVCE	= BEGIN VERTICAL CURVE ELEVATION	FG	= FINISHED GRADE	NE	= NORTHEAST	SN	= EXISTING SIGN
BVCS	= BEGIN VERTICAL CURVE STATION	FL	= FLOW LINE	NW	= NORTHWEST	SP	= STANDARD PLAN
C&G	= CURB & GUTTER	FT	= FEET	OC	= ON CENTER	SSMH	= SANITARY SEWER MANHOLE
CATV	= CABLE TELEVISION	FT/FT	= FEET PER FOOT	PVMNT	= PAVEMENT	STA	= STATION
CDF	= CONTROLLED DENSITY FILL	GALV	= GALVANIZED	PC	= POINT OF CURVATURE	STD	= STANDARD
CL	= CLASS, CENTERLINE	GRVL	= GRAVEL	PCC	= POINT OF COMPOUND CURVATURE, PORTLAND CEMENT CONCRETE	SW	= SOUTHWEST
CMP	= CORRUGATED METAL PIPE	GV	= GATE VALVE			TEL	= TELEPHONE
CMU	= CONCRETE MASONRY UNIT	HDPE	= HIGH DENSITY POLYETHYLENE	PED	= PEDESTAL	TL	= TRAFFIC LOOP
COMP	= COMPACTED	HMA	= HOT MIX ASPHALT	POC	= POINT ON CURVE	TYP	= TYPICAL
CON	= CONIFER	HP	= HIGH POINT	POSS	= POSSIBLE	UP	= UTILITY POLE
CONC	= CONCRETE	HYD	= HYDRANT	PRC	= POINT OF REVERSE CURVE	UTIL	= UTILITY
CONT	= CONTOUR	IE, INV	= INVERT ELEVATION	PROP	= PROPOSED	VC	= VERTICAL CURVE
CPSSP	= CORRUGATED POLYETHYLENE STORM SEWER PIPE	IW	= INJECTION WELL	PT	= POINT OF TANGENCY	VLT	= VAULT
CULV	= CULVERT	L	= LENGTH	PVC	= POLYVINYL CHLORIDE	VPC	= VERTICAL POINT OF CURVATURE
D/W	= DRIVEWAY	LDSC	= LANDSCAPING	PVI	= POINT OF VERTICAL INTERSECTION	VPI	= VERTICAL POINT OF INTERSECTION
DEC	= DECIDUOUS	LF	= LINEAR FEET	PWR	= POWER	VPT	= VERTICAL POINT OF TANGENCY
DI	= DUCTILE IRON	LOC	= LOCATION	R	= RADIUS	W	= WEST
E	= EAST	LP	= LOW POINT	R&C	= RING AND COVER	WM	= WATER METER
EOP, EP	= EDGE OF PAVEMENT	LT	= LEFT	RET	= RETAINING	WSDOT	= WASHINGTON STATE DEPARTMENT OF TRANSPORTATION
EQUIV	= EQUIVALENT	MAX	= MAXIMUM	ROW	= RIGHT OF WAY	XEOA	= EXISTING EDGE OF ASPHALT
EVCE	= END VERTICAL CURVE ELEVATION	MIN	= MINIMUM	RT	= RIGHT		
EVLS	= END VERTICAL CURVE STATION	MOD	= MODIFIED	S	= SOUTH		

NOTES

1. FIELD WORK PERFORMED BY COMPASS POINT SURVEY, LYNDAN, WA. TOPOGRAPHIC SURVEY PERFORMED IN MARCH AND MAY, 2013. AND JANUARY 2016
2. HORIZONTAL DATUM: WASHINGTON STATE PLANE (NORTH) COORDINATES – NAD 83–2011, VERTICAL DATUM: NAVD 88

LEGEND

EXISTING

- TB = EXISTING TOP OF BANK
- BB = EXISTING BOTTOM OF BANK
- = EXISTING DITCH ℄
- = EXISTING GRADE BREAK
- 95 = EXISTING MAJOR CONTOUR
- 95 = EXISTING MINOR CONTOUR
- = EXISTING GUARDRAIL
- X = EXISTING FENCE
- = EXISTING GRAVEL
- = EXISTING WALL
- = EXISTING BUILDING
- = EXISTING PROPERTY BOUNDARY
- = EXISTING RIGHT OF WAY
- = EXISTING RIGHT OF WAY ℄
- = EXISTING EASEMENT
- = EXISTING ROAD ℄
- = EXISTING WETLANDS BOUNDARY
- = EXISTING TRAFFIC STRIPING
- = EXISTING EDGE OF PAVEMENT
- = EXISTING FLOWLINE
- = EXISTING TOP BACK OF CURB
- = EXISTING SIDEWALK
- UGP = EXISTING POWER BURIED
- OHP = EXISTING OVERHEAD POWER
- UGC = EXISTING COMMUNICATIONS BURIED
- OHC = EXISTING OVERHEAD COMMUNICATIONS
- FO = EXISTING FIBER OPTICS BURIED
- TV = EXISTING TV BURIED
- T = EXISTING TELEPHONE BURIED
- C = EXISTING CONDUIT
- G = EXISTING GAS MAIN
- W = EXISTING WATER MAIN
- IRR = EXISTING IRRIGATION LINE
- FM = EXISTING SANITARY SEWER FORCE MAIN
- SS = EXISTING SANITARY SEWER
- SD = EXISTING STORM DRAIN
- OHW = EXISTING ORDINARY HIGH WATER
- = EXISTING CULVERT
- = EXISTING TREE LINE
- = EXISTING CONCRETE
- = EXISTING RR TRACKS
- = EXISTING SIGNAL POLE
- = EXISTING SIGNAL POLE W/ LUMINARE
- = EXISTING STREET LIGHT ASSEMBLY
- = EXISTING YARD LIGHT
- = EXISTING GUY WIRE
- = EXISTING GAS METER
- = EXISTING GAS VALVE
- = EXISTING TRANSFORMER PAD
- = EXISTING POWER VAULT
- = EXISTING JBOX
- = EXISTING SOIL BORING LOCATION
- MB = EXISTING MAIL BOX
- = EXISTING WATER SPIGOT
- = EXISTING WATER BLOW OFF
- = EXISTING WATER METER
- = EXISTING WATER VALVE
- = EXISTING FIRE HYDRANT
- = EXISTING TRAFFIC SIGNAL VAULT
- = EXISTING SEWER MANHOLE
- = EXISTING STORM DRAIN CATCH BASIN TYPE I
- = EXISTING STORM DRAIN CATCH BASIN TYPE II
- = EXISTING UTILITY POLE
- = EXISTING MONITORING WELL
- = EXISTING STORM CLEANOUT
- = EXISTING SEWER CLEANOUT
- = EXISTING SIGN
- = EXISTING TELEPHONE PEDESTAL
- = EXISTING COMMUNICATIONS VAULT
- = EXISTING BENCH MARK
- = EXISTING NAIL AND SHINER
- = EXISTING IRON PIPE
- = EXISTING MONUMENT (IN CASE)
- = EXISTING MONUMENT (SURFACE)
- = EXISTING ANGLE POINT
- = EXISTING TREE STUMP
- = EXISTING TREE
- = EXISTING VEGETATION

PROPOSED

- TB = PROPOSED TOP OF BANK
- BB = PROPOSED TOE OF BANK
- = PROPOSED DITCH ℄
- = PROPOSED GRADE BREAK
- 95 = PROPOSED MAJOR CONTOUR
- 95 = PROPOSED MINOR CONTOUR
- = PROPOSED GUARDRAIL
- X = PROPOSED FENCE
- = PROPOSED GRAVEL
- = PROPOSED WALL
- = PROPOSED BUILDING
- = PROPOSED PAVEMENT VALLEY
- = PROPOSED RIGHT OF WAY
- = PROPOSED AUTOTURN
- = PROPOSED CONSTRUCTION EASEMENT
- = PROPOSED ROAD ℄
- = PROPOSED SAWCUT
- = PROPOSED TRAFFIC STRIPE
- = PROPOSED ROAD EDGE OF PAVEMENT
- = PROPOSED CURB AND GUTTER
- = PROPOSED PATH
- = PROPOSED SIDEWALK
- PR = PROPOSED POWER LINE
- = PROPOSED ROCK WALL
- = PROPOSED PARKING STRIPE
- TS = PROPOSED TRAFFIC SIGNAL CONDUCTOR
- FO = PROPOSED FIBER OPTICS
- X = PROPOSED SILT FENCE
- C = PROPOSED CONDUIT
- = PROPOSED HANDRAIL
- IRR = PROPOSED IRRIGATION LINE
- W = PROPOSED WATER MAIN
- FM = PROPOSED SANITARY SEWER FORCE MAIN
- SS = PROPOSED SANITARY SEWER
- SD = PROPOSED STORM DRAIN
- = PROPOSED CULVERT
- = PROPOSED TREE LINE
- = PROPOSED CONC. SIDEWALK/DRIVEWAY
- = PROPOSED INFILTRATION TRENCH
- = PROPOSED INFILTRATION FILTER MEDIA
- = PROPOSED GRIND
- = PROPOSED DEMOLITION AREA
- = PROPOSED ASPHALT
- = PROPOSED RIGHT OF WAY TAKE
- = PROPOSED STORM DRAIN INLET
- = PROPOSED COUPLER
- = PROPOSED WATER METER
- = PROPOSED WATER VALVE
- = PROPOSED STORM DRAIN CATCH BASIN TYPE II
- = PROPOSED SANITARY SEWER MANHOLE
- = PROPOSED STORM DRAIN CATCH BASIN TYPE I
- = PROPOSED HYDRANT
- = PROPOSED UTILITY POLE
- = PROPOSED JBOX (TYPE I, II, III)
- = PROPOSED MONITORING WELL
- = PROP STORM CLEANOUT
- = PROPOSED SANITARY SEWER CLEAN OUT
- = PROPOSED SIGN
- = FLOW ARROW
- = PROPOSED TREE
- DETAIL NUMBER / DET / SHT / SHEET NUMBER = SECTION MARK

KYLE EDWARD CARRIER — STATE OF WASHINGTON — 50768 — REGISTERED PROFESSIONAL ENGINEER — 5/10/16

BID SET	DESIGNED BY KEC DRAWN BY PJC CHECKED BY LP	R&E Reichardt & Ebe ENGINEERING INC P.O. Box 978 | 423 Front Street, Lynden, WA 98264 (360) 354-3687 813 Metcalf Street, Sedro-Woolley, WA 98284 (360) 855-1713	NO.	DATE	DESCRIPTION	BY	CITY OF FERNDALE 2095 MAIN STREET FERNDALE, WA 98248	WASHINGTON STREET VISTA DR. TO THIRD AVENUE PROJECT LEGEND AND ABBREVIATIONS	DWG 15036 PROBASE JOB# 15036 SCALE H: N/A V: N/A DATE 5/10/2016 SHEET 2 of 17

KYLE EDWARD CARRIER
STATE OF WASHINGTON
50768
REGISTERED PROFESSIONAL ENGINEER
5/10/16

BID SET	DESIGNED BY KEC DRAWN BY PJC CHECKED BY KEC	R&E Reichhardt & Ebe ENGINEERING INC P.O. Box 978 | 423 Front Street, Lynden, WA 98264 (360) 354-3687 813 Metcalf Street, Sedro-Woolley, WA 98284 (360) 855-1713	NO. / DATE / DESCRIPTION / BY	CITY OF FERNDALE 2095 MAIN STREET FERNDALE, WA 98248	WASHINGTON STREET VISTA DR. TO THIRD AVENUE PROJECT EXISTING CONDITIONS	DWG 15036 PROBASE JOB# 15036	SCALE H: 1"=20' V: NA	DATE 5/10/2016 SHEET 3 of 17

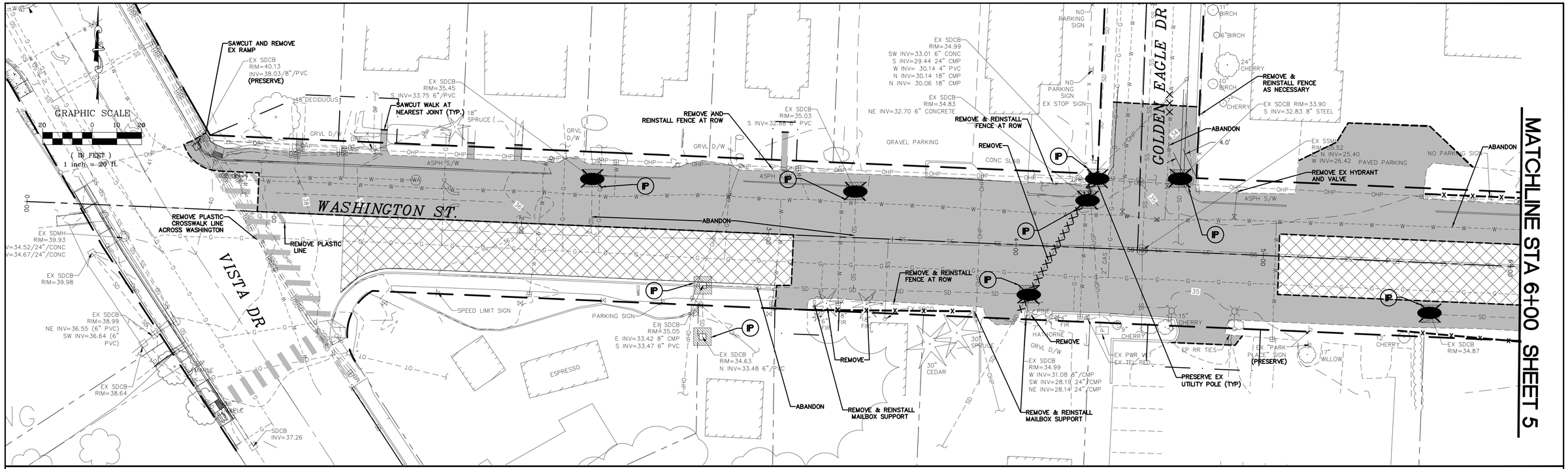

TESC PLAN LEGEND

SYMBOL	WASHINGTON STATE DEPT. OF ECOLOGY BEST MANAGEMENT PRACTICES (BMP). REF.: STORMWATER MANAGEMENT MANUAL FOR WESTERN WASHINGTON, 2012
FF	BMP C103 AND C233: CLEARING LIMITS AND FILTER FABRIC FENCE (SILT FENCE) – SEE DETAIL SHEET
SC	BMP C105 AND C140: STREET CLEANING
IP	BMP C220 INLET PROTECTION – PLACE SEDIMENT FILTER AROUND OR OVER CATCH BASINS

DEMOLITION PLAN LEGEND

- PROPOSED CONCRETE/ASPHALT REMOVAL
- PROPOSED PLANING
- SAWCUT FULL DEPTH OF PAVEMENT
- REMOVE EX SDCB

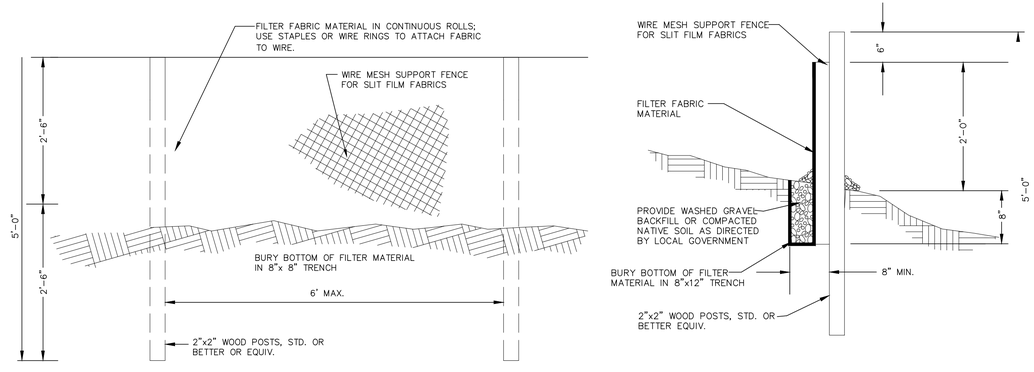

FILTER FABRIC FENCE DETAIL

NTS

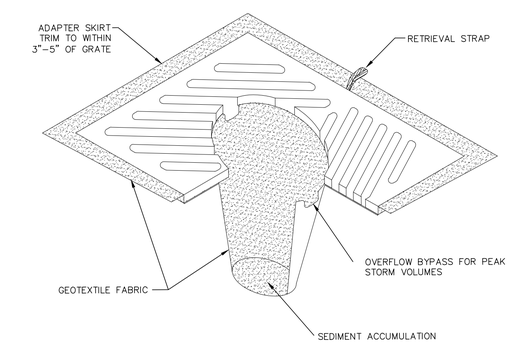

NOTES:

1. INSERT SHALL BE INSTALLED PRIOR TO CLEARING AND GRADING ACTIVITY, OR UPON PLACEMENT OF A NEW CATCH BASIN.
2. SEDIMENT SHALL BE REMOVED FROM THE UNIT WHEN IT BECOMES HALF FULL.
3. SEDIMENT REMOVAL SHALL BE ACCOMPLISHED BY REMOVING THE INSERT, EMPTYING, AND RE–INSERTING IT INTO THE CATCH BASIN.

CATCH BASIN INSERT

NTS

KYLE EDWARD CARLTON STATE OF WASHINGTON 50768 REGISTERED PROFESSIONAL ENGINEER 5/10/16

BID SET	DESIGNED BY KEC DRAWN BY PJC CHECKED BY KEC	R&E Reichhardt & Ebe ENGINEERING INC P.O. Box 978 | 423 Front Street, Lynden, WA 98264 (360) 354-3687 813 Metcalf Street, Sedro-Woolley, WA 98284 (360) 855-1713	NO. / DATE / DESCRIPTION / BY	CITY OF FERNDALE 2095 MAIN STREET FERNDALE, WA 98248	WASHINGTON STREET VISTA DR. TO THIRD AVENUE PROJECT TESC AND DEMO PLAN STA 0+00 - 6+00	DWG 15036 PROBASE JOB# 15036 SCALE H: 1"=20' V: 1"=2'	DATE 5/10/2016 SHEET 4 of 17

GRAPHIC SCALE

20 0 10 20

(IN FEET)
1 inch = 20 ft.

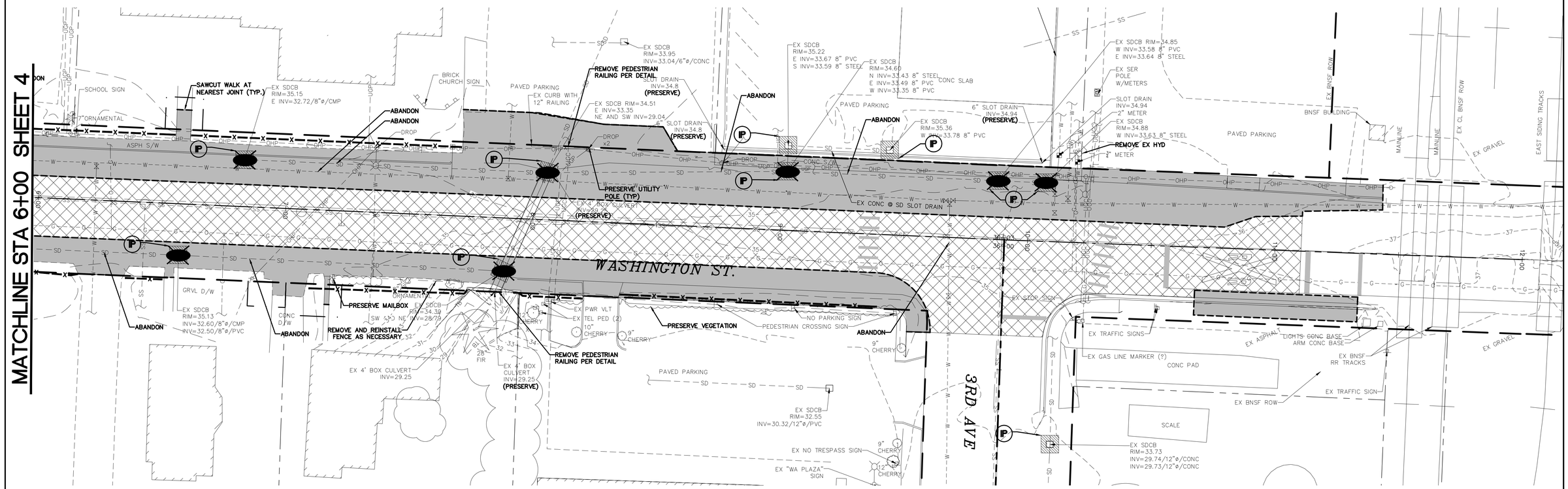

5/10/16

BID SET	DESIGNED BY KEC DRAWN BY PJC CHECKED BY KEC	R&E Reichhardt & Ebe ENGINEERING INC P.O. Box 978 | 423 Front Street, Lynden, WA 98264 (360) 354-3687 813 Metcalf Street, Sedro-Woolley, WA 98284 (360) 855-1713	NO. | DATE | DESCRIPTION | BY	CITY OF FERNDALE 2095 MAIN STREET FERNDALE, WA 98248	WASHINGTON STREET VISTA DR. TO THIRD AVENUE PROJECT TESC AND DEMO PLAN STA 6+00 - 12+00	DWG 15036 PROBASE JOB# 15036 SCALE H: 1"=20' V: NA	DATE 5/10/2016 SHEET 5 of 17

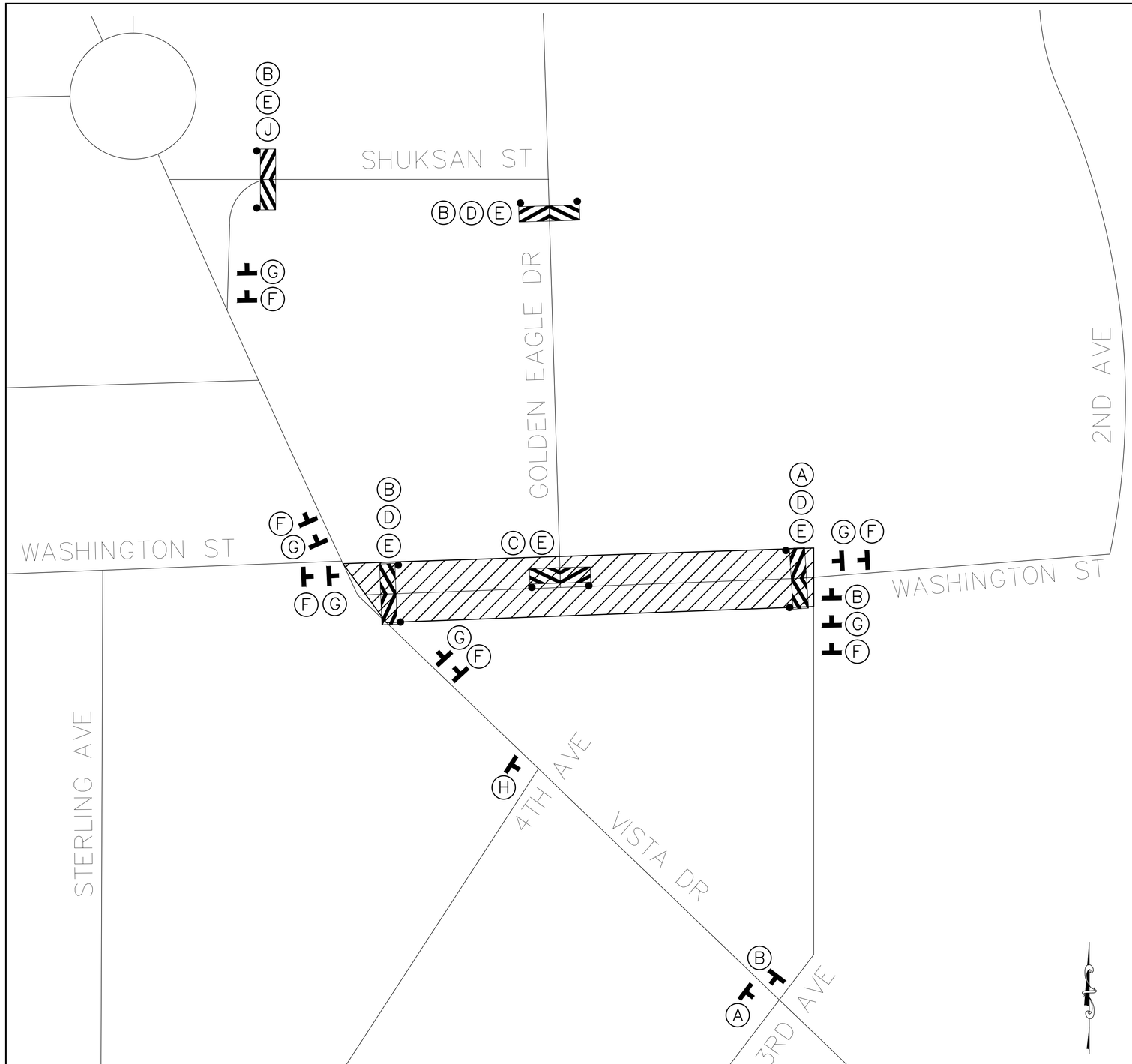

LEGEND

= SIGN (SHOWN FACING LEFT)

= PROPOSED WORK AREA

(A) DETOUR M4–10L

(B) DETOUR M4–10R

(C) ROAD CLOSED R 11–2

(D) ROAD CLOSED TO THRU TRAFFIC R 11–4

(E) TWO TYPE III R AND TYPE III L, BARRICADE WITH 2 TYPE A FLASHING WARNING LIGHTS

(F) ROAD CLOSED AHEAD W 20–3

(G) DETOUR AHEAD W20–2

(H) DETOUR M4–8

(J) ROAD CLOSED 1/4 MILE AHEAD LOCAL TRAFFIC ONLY R 11–3

SIGN SPACING = X (1)		
RURAL ROADS	45/55 MPH	500'±
URBAN ARTERIALS & RURAL ROADS	35/40 MPH	350'±
RURAL ROADS, URBAN ARTERIALS, RESIDENTIAL & BUSINESS DISTRICTS	25/30 MPH	200'± (2)
URBAN STREETS	25 MPH OR LESS	100'± (2)
ALL SIGNS ARE BLACK ON ORANGE UNLESS DESIGNATED OTHERWISE		

(1) ALL SPACING MAY BE ADJUSTED TO ACCOMODATE AT–GRADE INTERSECTIONS AND DRIVEWAYS.

(2) THIS SIGN SPACING MAY BE REDUCED IN URBAN AREAS TO FIT ROADWAY CONDITIONS.

KYLE EDWARD CARRIGAN — STATE OF WASHINGTON — 50768 — REGISTERED PROFESSIONAL ENGINEER — 5/10/16

BID SET

DESIGNED BY KEC
DRAWN BY PJC
CHECKED BY LP

R&E Reichhardt & Ebe ENGINEERING INC
P.O. Box 978 | 423 Front Street, Lynden, WA 98264 (360) 354-3687
813 Metcalf Street, Sedro-Woolley, WA 98284 (360) 855-1713

NO.	DATE	DESCRIPTION	BY

CITY OF FERNDALE
2095 MAIN STREET
FERNDALE, WA 98248

WASHINGTON STREET
VISTA DR. TO THIRD AVENUE PROJECT
TRAFFIC DETOUR PLAN

DWG 15036 PROBASE
JOB# 15036
SCALE H: 1"=20' V: NA
DATE 5/10/2016
SHEET 6 of 17

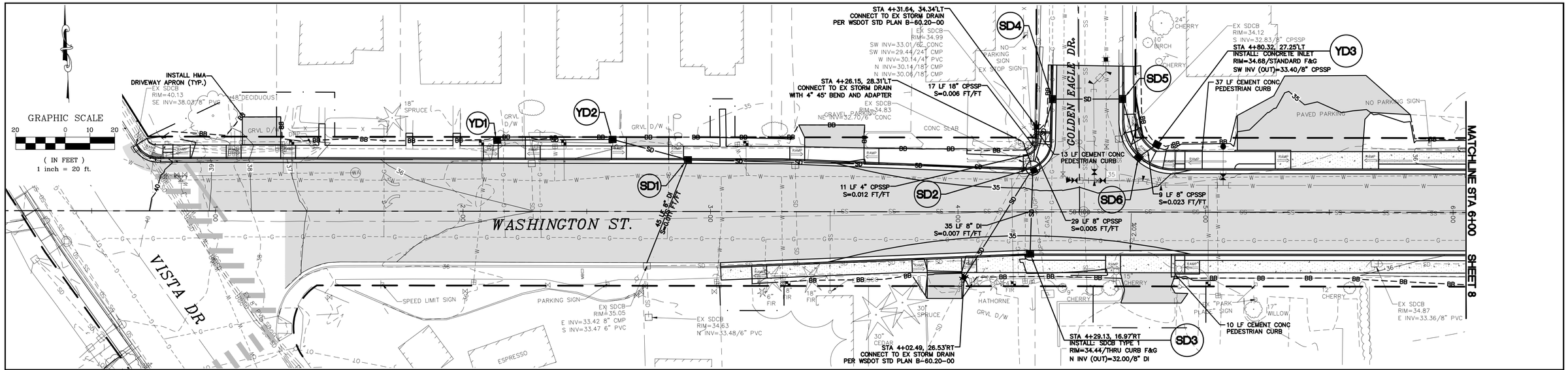

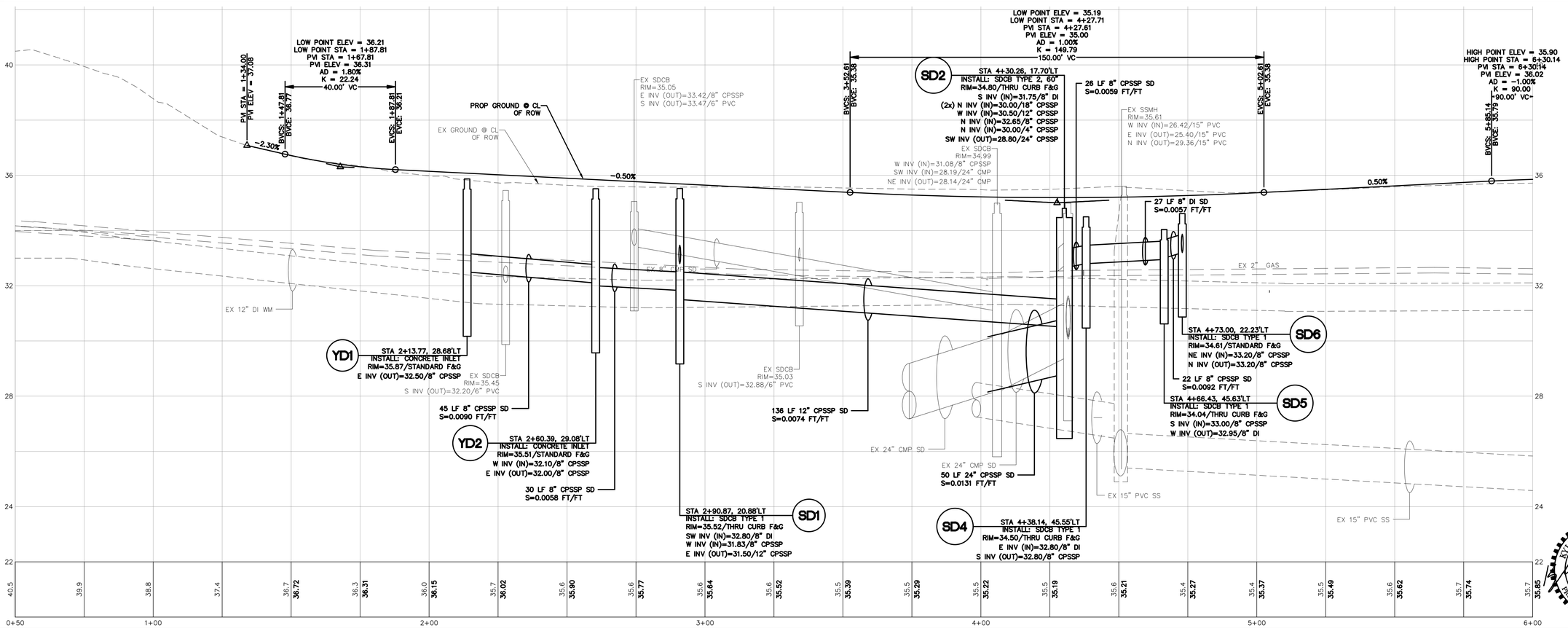

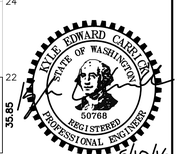

BID SET

DESIGNED BY KEC
DRAWN BY PJC
CHECKED BY LP

R&E Reichhardt & Ebe ENGINEERING INC
P.O. Box 978 | 423 Front Street, Lynden, WA 98264 (360) 354-3687
813 Metcalf Street, Sedro-Woolley, WA 98284 (360) 855-1713

NO.	DATE	DESCRIPTION	BY

CITY OF FERNDALE
2095 MAIN STREET
FERNDALE, WA 98248

WASHINGTON STREET
VISTA DR. TO THIRD AVENUE PROJECT
STORM PLAN AND PROFILE STA 0+50 - 6+00

DWG 15036 PROBASE
JOB# 15036
SCALE H: 1"=20' V: 1"=2'
DATE 5/10/2016
SHEET 7 of 17

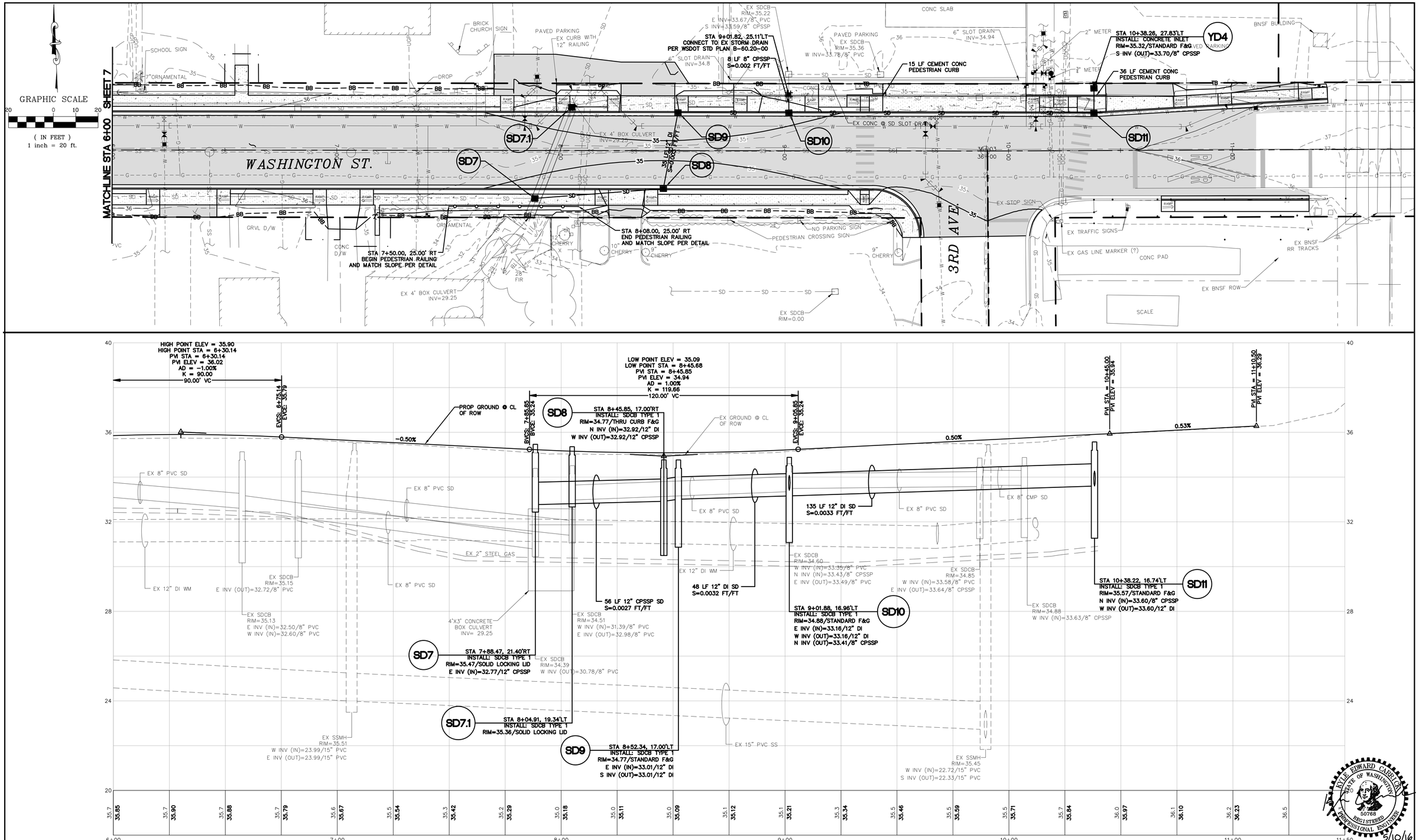

BID SET	DESIGNED BY KEC DRAWN BY PJC CHECKED BY LP	R&E Reichhardt & Ebe ENGINEERING INC P.O. Box 978 | 423 Front Street, Lynden, WA 98264 (360) 354-3687 813 Metcalf Street, Sedro-Woolley, WA 98284 (360) 855-1713	NO. | DATE | DESCRIPTION | BY	CITY OF FERNDALE 2095 MAIN STREET FERNDALE, WA 98248	WASHINGTON STREET VISTA DR. TO THIRD AVENUE PROJECT STORM PLAN AND PROFILE STA 6+00 - 11+50	DWG 15036 PROBASE JOB# 15036 SCALE H: 1"=20' V: 1"=2'	DATE 5/10/2016 SHEET 8 of 17

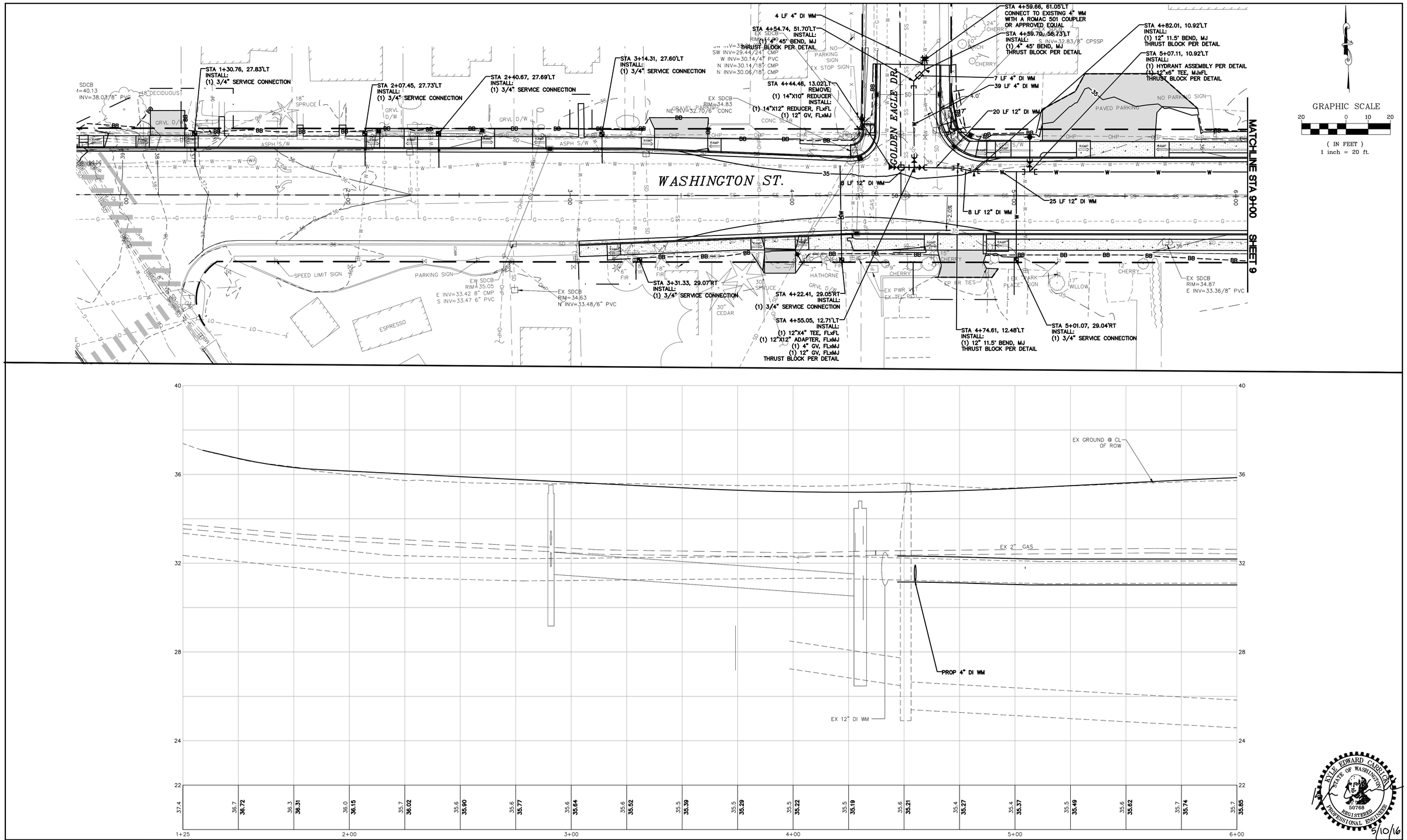

BID SET

DESIGNED BY	KEC
DRAWN BY	PJC
CHECKED BY	KEC

Reichhardt & Ebe ENGINEERING INC
P.O. Box 978 | 423 Front Street, Lynden, WA 98264 (360) 354-3687
813 Metcalf Street, Sedro-Woolley, WA 98284 (360) 855-1713

NO.	DATE	DESCRIPTION	BY

CITY OF FERNDALE
2095 MAIN STREET
FERNDALE, WA 98248

WASHINGTON STREET
VISTA DR. TO THIRD AVENUE PROJECT
WATER PLAN AND PROFILE STA 1+25 - 6+00

DWG 15036 PROBASE
JOB# 15036
SCALE H: 1"=20' V: 1"=2'
DATE 5/10/2016
SHEET 9 of 17

KYLE EDWARD CARRICO
STATE OF WASHINGTON
50768
REGISTERED PROFESSIONAL ENGINEER
5/10/16

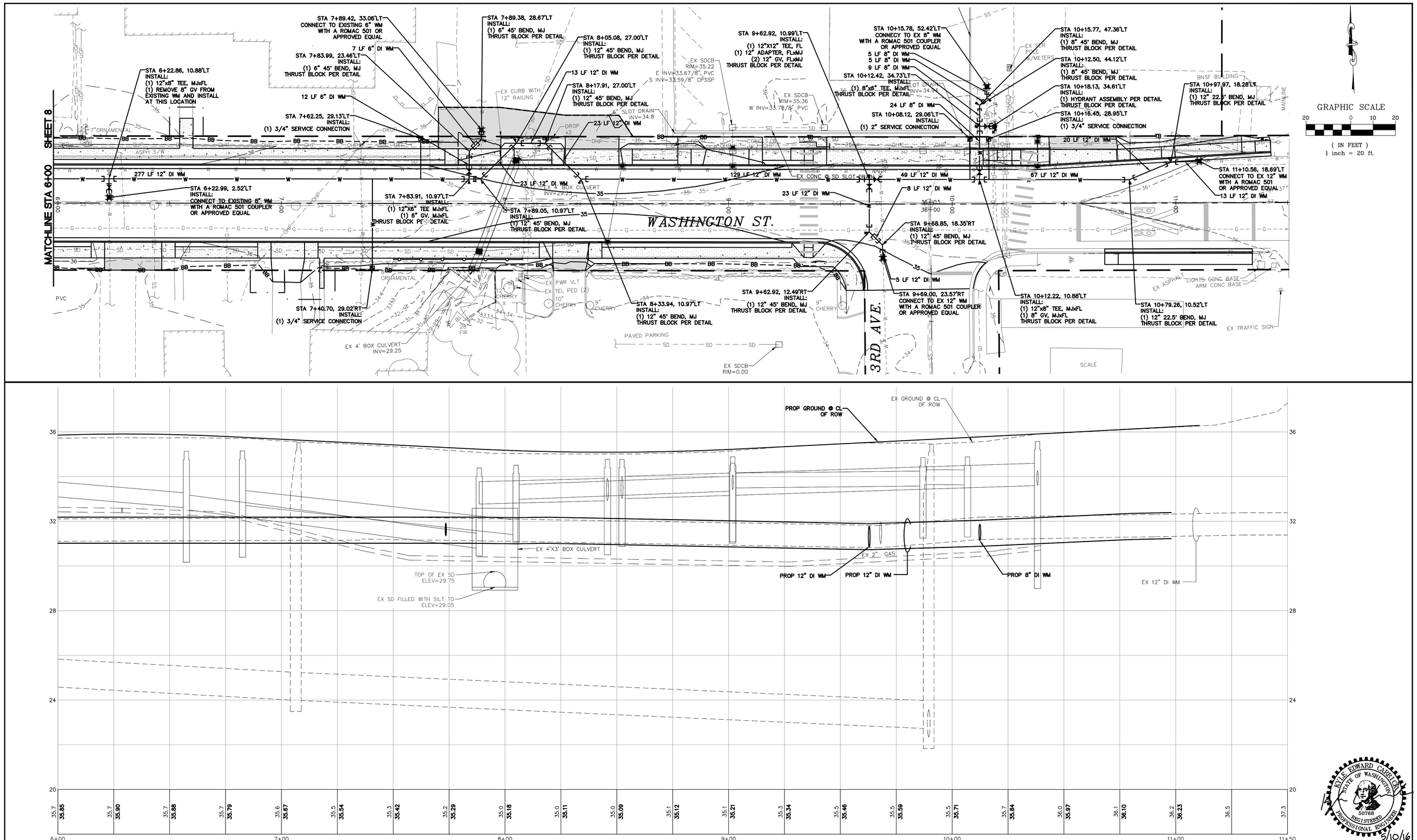

BID SET

DESIGNED BY	KEC
DRAWN BY	PJC
CHECKED BY	KEC

Reichhardt & Ebe ENGINEERING INC
P.O. Box 978 | 423 Front Street, Lynden, WA 98264 (360) 354-3687
813 Metcalf Street, Sedro-Woolley, WA 98284 (360) 855-1713

NO.	DATE	DESCRIPTION	BY

CITY OF FERNDALE
2095 MAIN STREET
FERNDALE, WA 98248

WASHINGTON STREET
VISTA DR. TO THIRD AVENUE PROJECT
WATER PLAN AND PROFILE STA 6+00 - 11+50

DWG 15036 PROBASE
JOB# 15036
SCALE H: 1"=20' V: 1"=2'
DATE 5/10/2016
SHEET 10 of 17

KYLE EDWARD CARRIGAN STATE OF WASHINGTON 50768 REGISTERED PROFESSIONAL ENGINEER
5/10/16

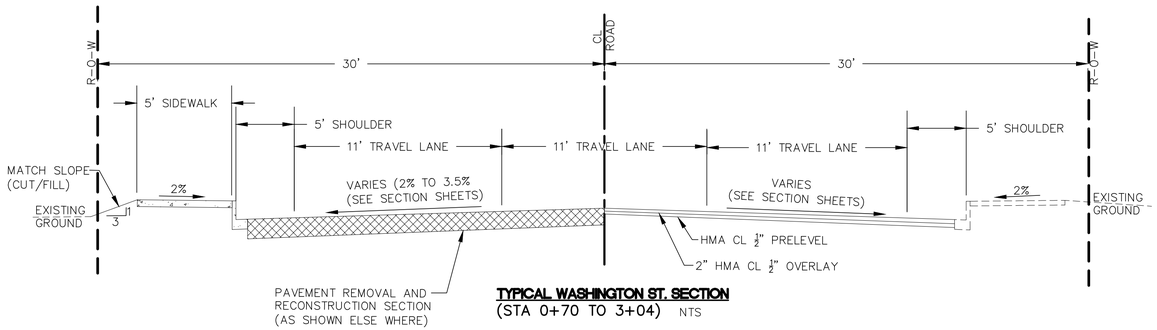

TYPICAL WASHINGTON ST. SECTION
(STA 0+70 TO 3+04) NTS

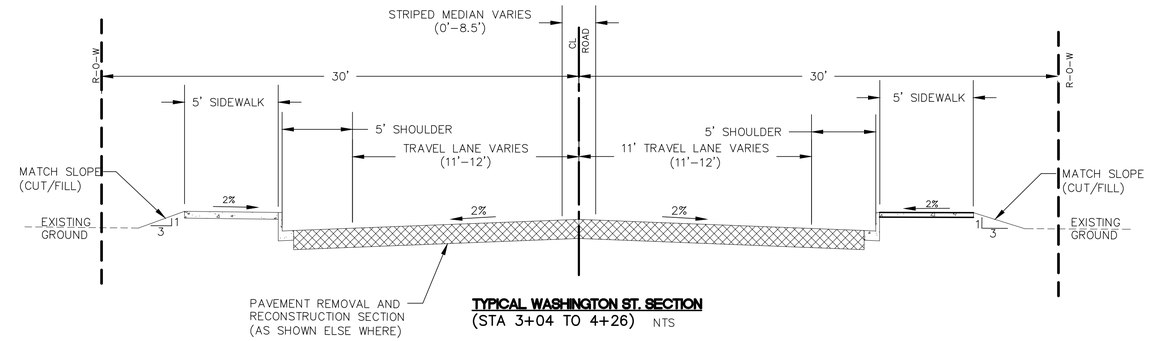

TYPICAL WASHINGTON ST. SECTION
(STA 3+04 TO 4+26) NTS

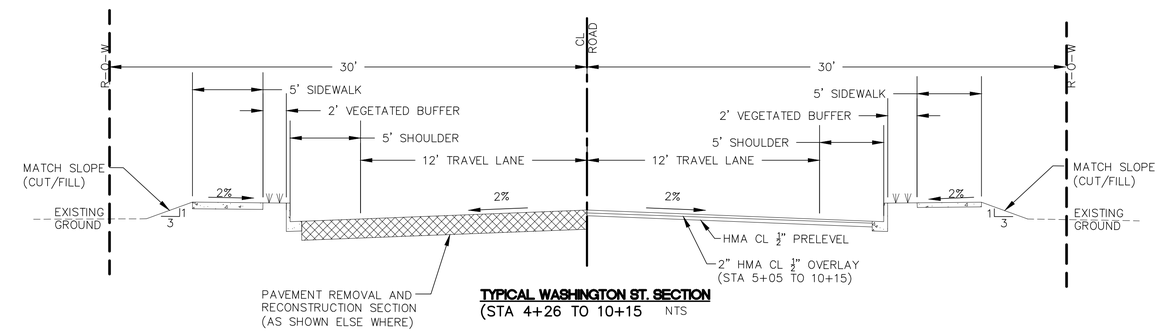

TYPICAL WASHINGTON ST. SECTION
(STA 4+26 TO 10+15 NTS

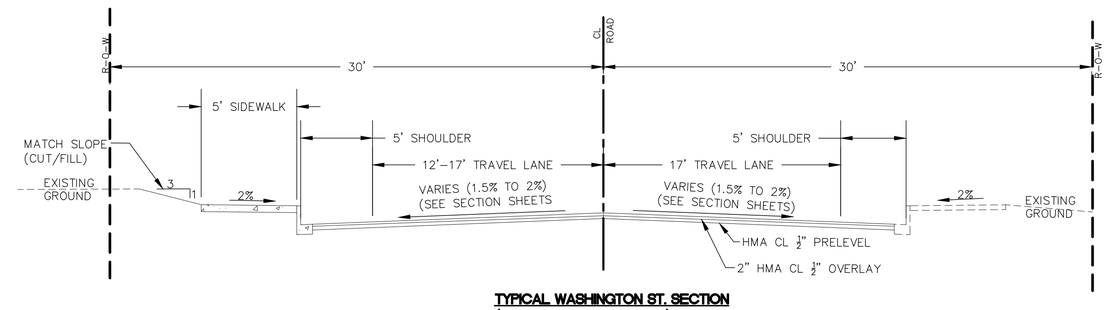

TYPICAL WASHINGTON ST. SECTION
(STA 10+15 TO 11+43) NTS

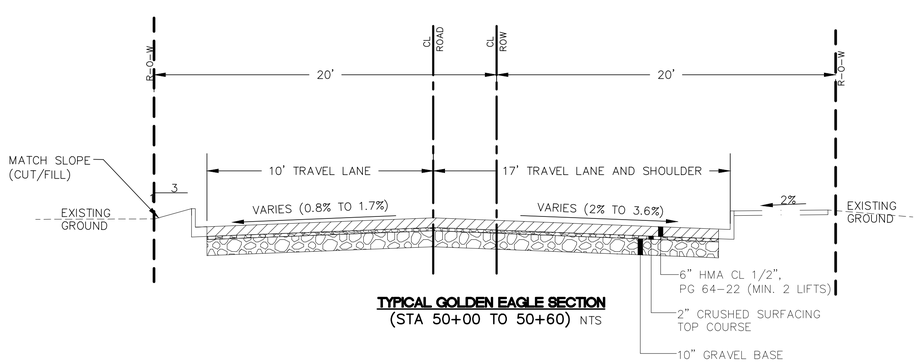

TYPICAL GOLDEN EAGLE SECTION
(STA 50+00 TO 50+60) NTS

BID SET	DESIGNED BY KEC DRAWN BY PJC CHECKED BY KEC	R&E Reichhardt & Ebe ENGINEERING INC P.O. Box 978 | 423 Front Street, Lynden, WA 98264 (360) 354-3687 813 Metcalf Street, Sedro-Woolley, WA 98284 (360) 855-1713	NO.	DATE	DESCRIPTION	BY	CITY OF FERNDALE 2095 MAIN STREET FERNDALE, WA 98248	WASHINGTON STREET VISTA DR. TO THIRD AVENUE PROJECT TYPICAL SECTIONS	DWG 15036 PROBASE JOB# 15036	SCALE H: NTS V: NTS	DATE 5/10/2016 SHEET 11 of 17

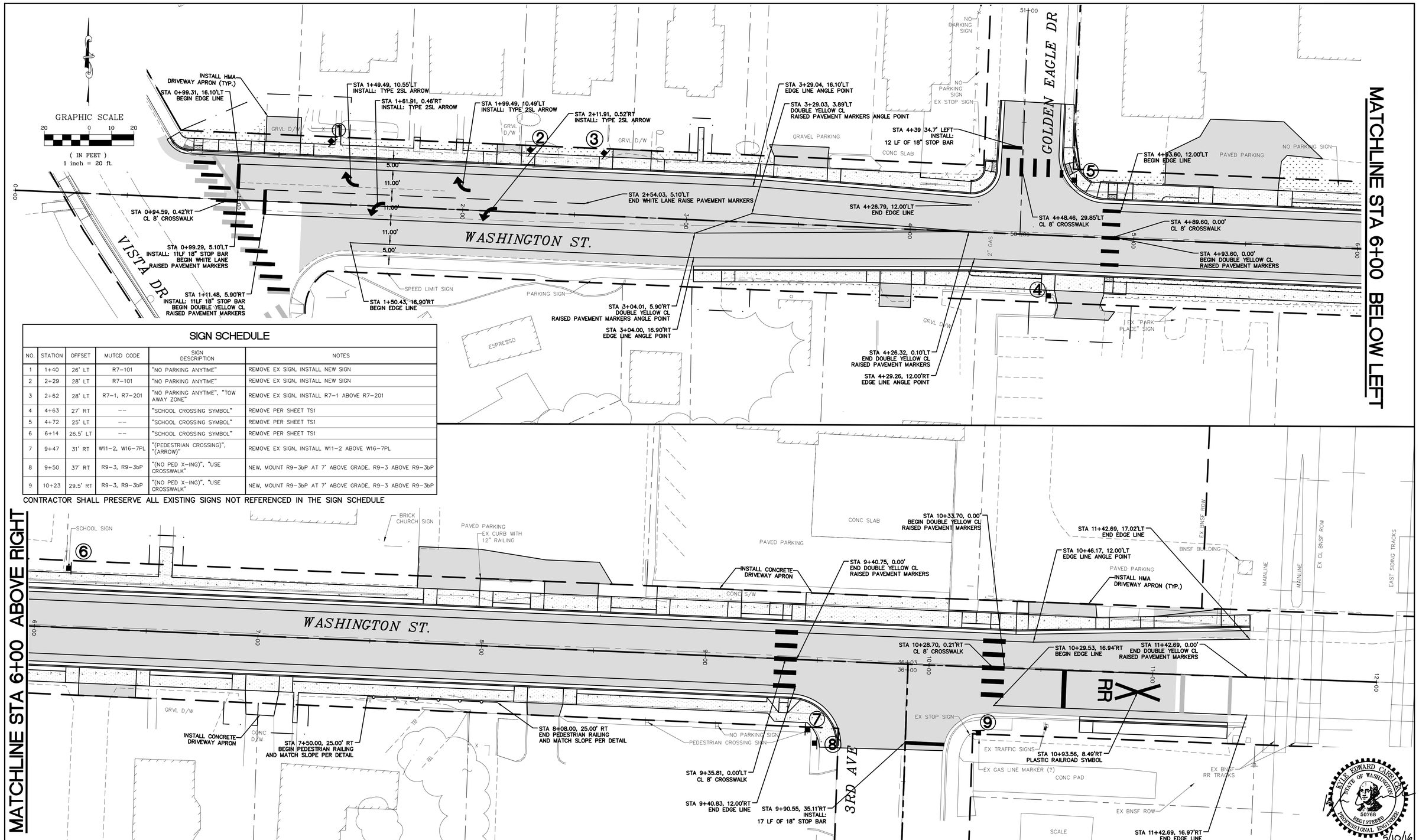

SIGN SCHEDULE

NO.	STATION	OFFSET	MUTCD CODE	SIGN DESCRIPTION	NOTES
1	1+40	26' LT	R7-101	"NO PARKING ANYTIME"	REMOVE EX SIGN, INSTALL NEW SIGN
2	2+29	28' LT	R7-101	"NO PARKING ANYTIME"	REMOVE EX SIGN, INSTALL NEW SIGN
3	2+62	28' LT	R7-1, R7-201	"NO PARKING ANYTIME", "TOW AWAY ZONE"	REMOVE EX SIGN, INSTALL R7-1 ABOVE R7-201
4	4+63	27' RT	--	"SCHOOL CROSSING SYMBOL"	REMOVE PER SHEET TS1
5	4+72	25' LT	--	"SCHOOL CROSSING SYMBOL"	REMOVE PER SHEET TS1
6	6+14	26.5' LT	--	"SCHOOL CROSSING SYMBOL"	REMOVE PER SHEET TS1
7	9+47	31' RT	W11-2, W16-7PL	"(PEDESTRIAN CROSSING)", "(ARROW)"	REMOVE EX SIGN, INSTALL W11-2 ABOVE W16-7PL
8	9+50	37' RT	R9-3, R9-3bP	"(NO PED X-ING)", "USE CROSSWALK"	NEW, MOUNT R9-3bP AT 7' ABOVE GRADE, R9-3 ABOVE R9-3bP
9	10+23	29.5' RT	R9-3, R9-3bP	"(NO PED X-ING)", "USE CROSSWALK"	NEW, MOUNT R9-3bP AT 7' ABOVE GRADE, R9-3 ABOVE R9-3bP

CONTRACTOR SHALL PRESERVE ALL EXISTING SIGNS NOT REFERENCED IN THE SIGN SCHEDULE

BID SET

DESIGNED BY KEC
DRAWN BY PJC
CHECKED BY LP

R&E Reichhardt & Ebe ENGINEERING INC
P.O. Box 978 | 423 Front Street, Lynden, WA 98264 (360) 354-3687
813 Metcalf Street, Sedro-Woolley, WA 98284 (360) 855-1713

NO.	DATE	DESCRIPTION	BY

CITY OF FERNDALE
2095 MAIN STREET
FERNDALE, WA 98248

WASHINGTON STREET
VISTA DR. TO THIRD AVENUE PROJECT
CHANNELIZATION AND PAVING PLAN

DWG 15036 PROBASE
DATE 5/10/2016
JOB# 15036
SCALE H: 1"=20' V: NA
SHEET 12 of 17

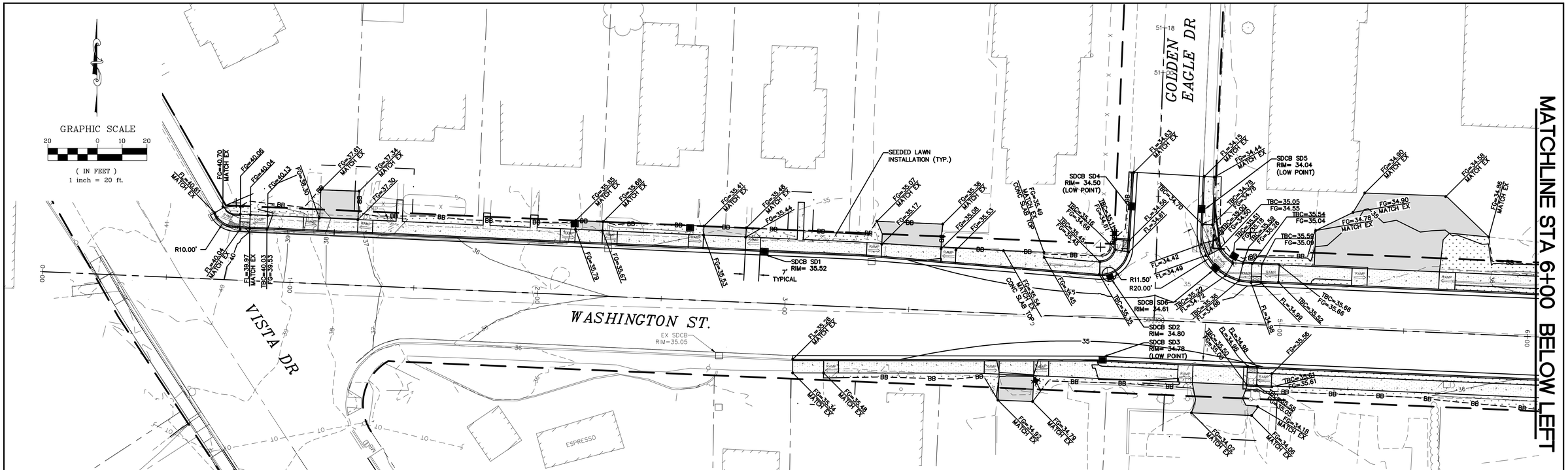

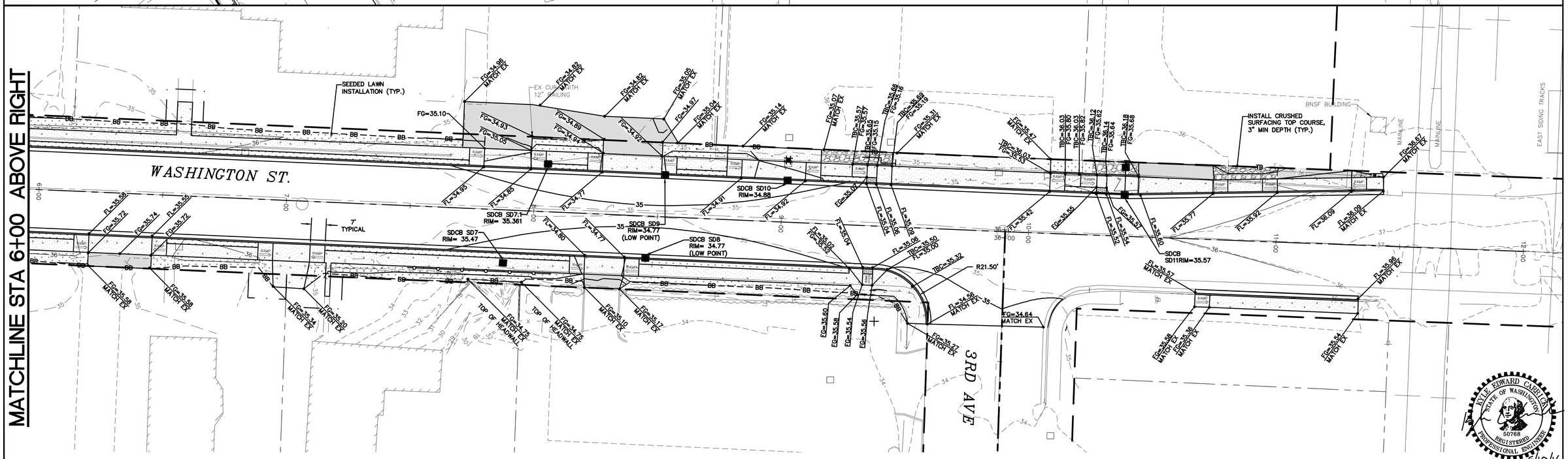

BID SET

DESIGNED BY	KEC
DRAWN BY	PJC
CHECKED BY	LP

Reichhardt & Ebe ENGINEERING INC
P.O. Box 978 | 423 Front Street, Lynden, WA 98264 (360) 354-3687
813 Metcalf Street, Sedro-Woolley, WA 98284 (360) 855-1713

NO.	DATE	DESCRIPTION	BY

CITY OF FERNDALE
2095 MAIN STREET
FERNDALE, WA 98248

WASHINGTON STREET
VISTA DR. TO THIRD AVENUE PROJECT
GRADING PLAN

DWG 15036 PROBASE
DATE 5/10/2016
JOB# 15036
SCALE H: 1"=20' V: NA
SHEET 13 of 17

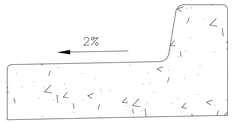

BROKEN BACK CURB

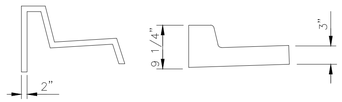

CONTRACTION JOINTS

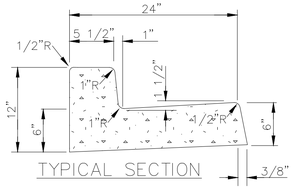

TYPICAL SECTION

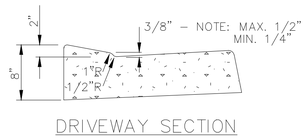

DRIVEWAY SECTION

NOTES:
CONTRACTION JOINTS OF ONE OF THE TYPES SHOWN ABOVE TO BE PLACED 10' C/C. JOINTS COMPLETELY SEVER THE STRUCTURE TO THE POINTS SHOWN. JOINTS MAY BE MADE BY INSERTING MIN. 3/16" BITUMINOUS FILLER DUMMY JOINTS. JOINTS SHALL BE CLEANED AND EDGED

3/4" EXPANSION JOINTS TO BE PLACED AT DRIVEWAY SECTIONS, CURB RETURNS, CURB RAMPS AND COLD JOINTS OR A MAX. OF 80' C/C. EXPANSION JOINTS SHALL PROTRUDE 1" BELOW THE BOTTOM OF THE GUTTER.

CURB DRAINS SHALL BE CONSTRUCTED OF 2" PVC PIPE OR OTHER MATERIAL SUBJECT TO APPROVAL OF THE ENGINEER, CUT TO LENGTH TO PASS FROM THE BACK OF CURB THROUGH THE CURB TO THE FACE OF THE CURB AT THE GUTTER LINE. SPACING WILL BE MAXIMUM OF 50 FEET, CENTER TO CENTER, AND/OR EACH SIDE OF THE DRIVEWAYS AND AT SUCH LOCATIONS AS DESIGNATED BY THE ENGINEER.

CURB AND GUTTER DETAILS

NTS

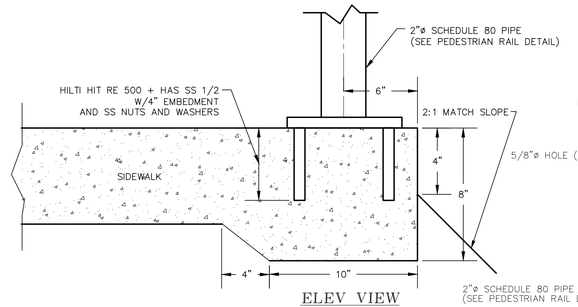

ELEV VIEW

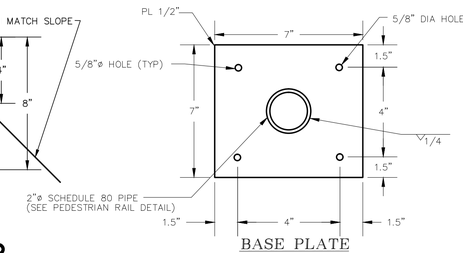

BASE PLATE

NTS

STA 7+50 TO 8+08, R
CEMENT CONCRETE SIDEWALK
THICKENED EDGE

NTS

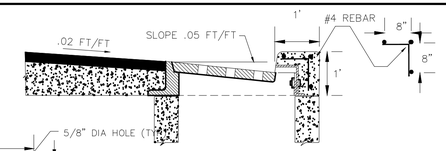

SECTION A-A

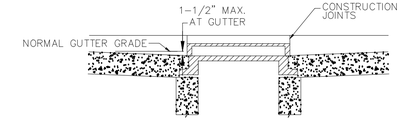

SECTION B-B

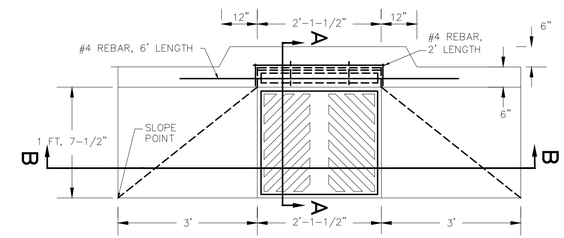

THRU CURB INLET DETAIL

NTS

NOTES:
1. HANDRAIL SHALL BE HOT DIPPED GALVANIZED.
2. COLD GALVANIZED COMPOUND SHALL BE APPLIED TO ALL FIELD WELDS AND BLEMISHES.
3. PIPES SHALL BE ASTM A53 GRADE B.

NOTES:
ALL FRAMES, COVERS AND VALVE BOXES SHALL BE ADJUSTED TO FINISHED GRADE AFTER THE FINAL LIFT OF PAVING HAS BEEN COMPLETED. THE FOLLOWING PROCEDURE SHALL BE USED:
1. CUT THE ASPHALT IN AN EVEN CIRCLE AROUND THE STRUCTURE CASTING TO BE ADJUSTED.
2. REMOVE THE FILL MATERIAL WITHIN THE CUT PAVEMENT AREA TO 8 INCHES MIN. BELOW FINISH GRADE.
3. PLACE THE CASTING AT FINISH GRADE.
4. PLACE PORTLAND CEMENT CONCRETE TO WITHIN THE TOP 2 INCHES OF FINISH GRADE.
5. APPLY TACK TO THE STRUCTURE CASTING, CUT PAVEMENT, AND PC CONCRETE.
6. PLACE AND COMPACT 2 INCHES OF HMA TO FINISH GRADE.
7. SEAL PAVEMENT JOINTS WITH HOT AR4000 AND TOP WITH SAND.

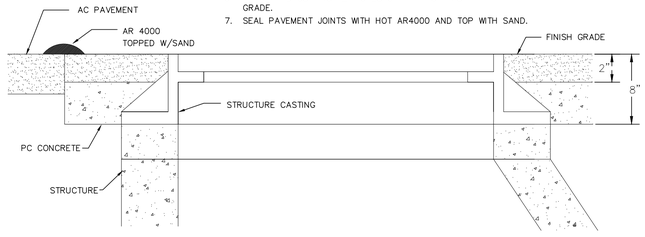

ADJUSTING CASTINGS TO FINISHED GRADE

NTS

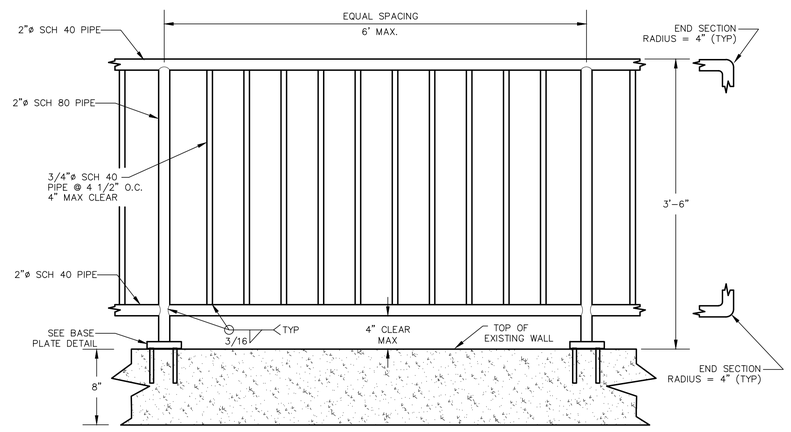

PEDESTRIAN RAIL DETAIL

NTS

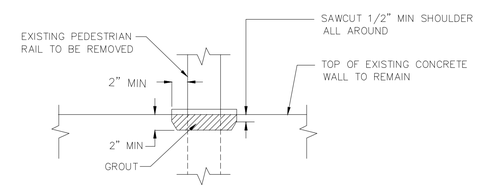

NOTES:
1. CHIP AND REMOVE CONCRETE AND PEDESTRIAN RAIL AS SHOWN.
2. ROUGHEN EXPOSED CONCRETE.

REMOVAL OF EXISTING PEDESTRIAN RAIL DETAIL

NTS

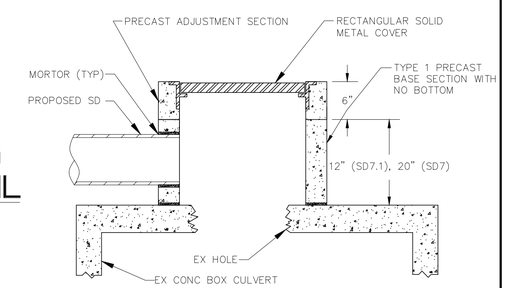

CUSTOM TYPE 1 CATCH BASIN DETAIL

NTS (STA 7+88, R & 8+05, L)

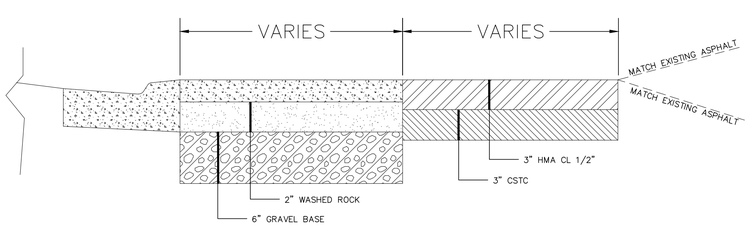

PROPOSED ASPHALT APRON AND ASPHALT SECTION

NTS

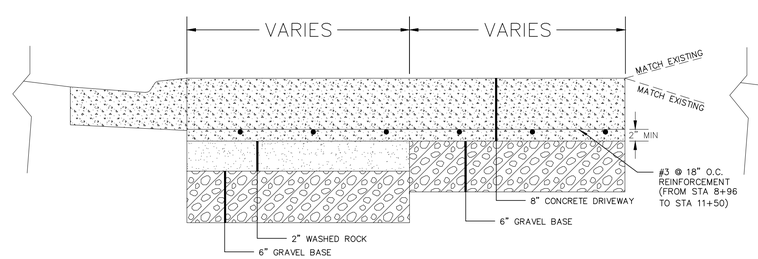

PROPOSED CONCRETE DRIVEWAY SECTION

NTS

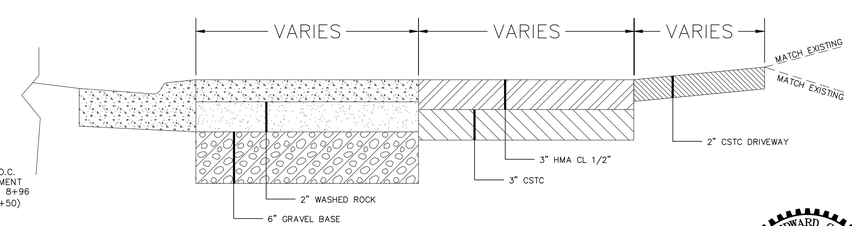

PROPOSED ASPHALT APRON AND GRAVEL SECTION

NTS

BID SET	DESIGNED BY KEC DRAWN BY PJC CHECKED BY LP	R&E Reichhardt & Ebe ENGINEERING INC P.O. Box 978 | 423 Front Street, Lynden, WA 98264 (360) 354-3687 813 Metcalf Street, Sedro-Woolley, WA 98284 (360) 855-1713	NO. / DATE / DESCRIPTION / BY	CITY OF FERNDALE 2095 MAIN STREET FERNDALE, WA 98248	WASHINGTON STREET VISTA DR. TO THIRD AVENUE PROJECT DETAILS	DWG 15036 PROBASE JOB# 15036	SCALE H: NA V: NA	DATE 5/10/2016 SHEET 14 of 17

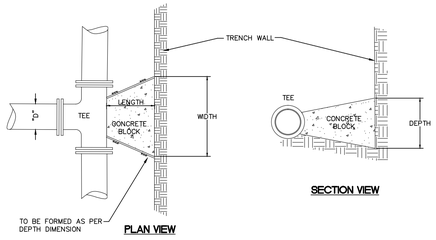

"D"	WIDTH	DEPTH	LENGTH	VOL.
6"	1'-6"	1'-6"	12"	3.0
8"	2'-0"	2'-0"	12"	4.5
10"	2'-6"	2'-6"	12"	7.0
12"	3'-0"	3'-0"	18"	14.0

VOL. = Approx. Volume of Blocking Material Required in cu. ft.

SOIL BEARING CAPACITY 1500 PSF MINIMUM
100 P.S.I. OPERATING PRESSURE

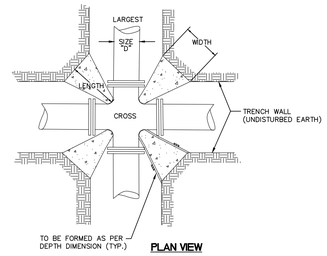

"D"	WIDTH	DEPTH	LENGTH	VOL.	X4 blocks/joint
6"	1'-0"	1'-0"	12"	0.63	2.50 cu ft
8"	1'-3"	1'-3"	12"	1.00	4.01 cu ft
10"	1'-6"	1'-6"	12"	1.63	6.50 cu ft
12"	1'-9"	1'-9"	18"	3.05	12.19 cu ft

VOL. = Approx. Volume of Blocking Material Required in cu. ft.

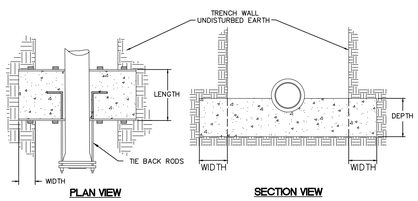

"D"	WIDTH	DEPTH	LENGTH	*VOL.	# OF RODS	ROD DIA.
6"	1'-6"	1'-6"	12"	7.5	2	1/2"
8"	2'-0"	2'-0"	18"	20.0	2	5/8"
10"	2'-6"	2'-6"	24"	37.5	2	3/4"
12"	2'-9"	2'-9"	24"	44.0	4	3/4"

*VOL. = Approx. Volume of Blocking Material Required in cu. ft.
RODS: A36 STEEL MINIMUM

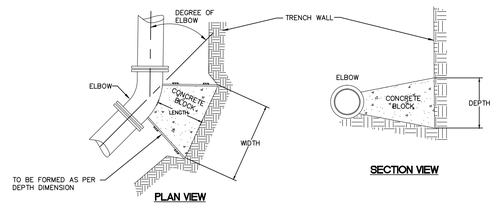

SIZE	LENGTH	11 1/4°			22 1/2°			45°			90°		
		WIDTH	DEPTH	VOL.	WIDTH	DEPTH	VOL.	WIDTH	DEPTH	VOL.	WIDTH	DEPTH	VOL.
6"	12"	1'-0"	1'-0"	0.63	1'-0"	1'-0"	0.63	1'-6"	1'-6"	1.25	2'-3"	1'-6"	1.88
8"	12"	1'-3"	1'-3"	1.00	1'-3"	1'-3"	1.00	1'-9"	1'-9"	1.75	3'-0"	2'-0"	3.33
10"	12"	1'-9"	1'-6"	1.72	1'-9"	1'-6"	1.72	2'-3"	2'-3"	2.88	3'-6"	2'-6"	4.861
12"	18"	2'-0"	1'-9"	3.48	2'-0"	1'-9"	3.48	2'-9"	2'-6"	5.98	4'-0"	3'-0"	10.00

VOL. = Approx. Volume of Blocking Material Required in cu. ft.

THRUST BLOCKING

NTS

NOTES

(1.) For close coupled hydrants use all flange type connections.
(2.) If hydrant rises through concrete use expansion strip around hydrant barrel.
(3.) Hydrants to be Iowa or M & H 929T.
(4.) Tie-rods may be replaced with megalugs (from EBAA Iron or equal) on fittings and Field Lok gaskets (from US Pipe or equal) plus thrust block due to unsuitable soils.
(5.) Rock shall be 1 1/2" washed rock with filter fabric over top to prevent migration of fines.

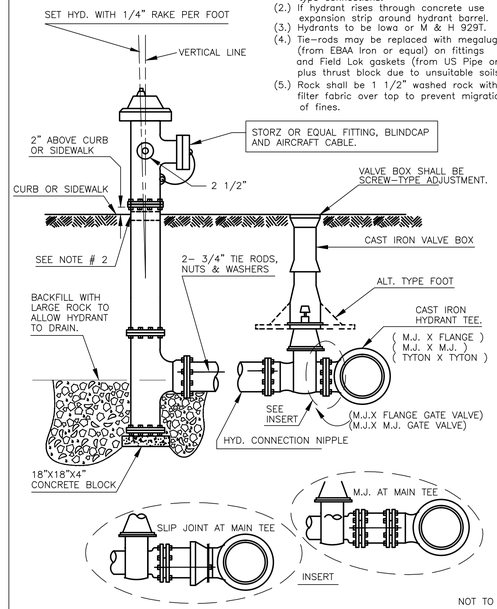

NOT TO SCALE

APPROVED		CITY OF FERNDALE	DRAWING
Public Works Director	Date	FIRE HYDRANT ASSEMBLY	W-1

JULY 2001

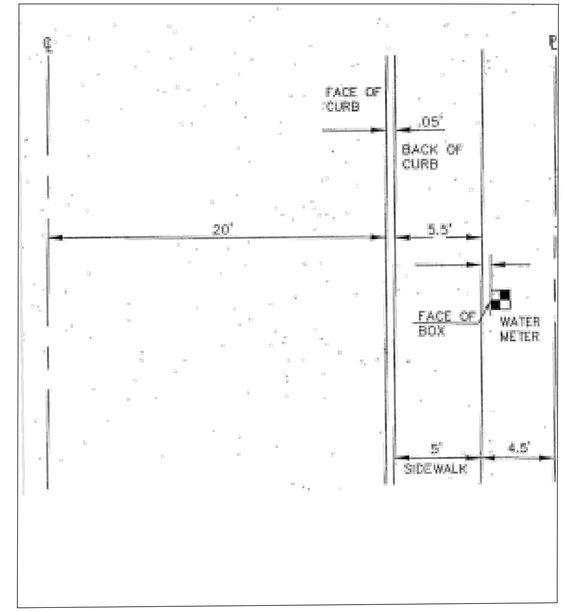

WATERMETER LOCATION DETAIL

NTS

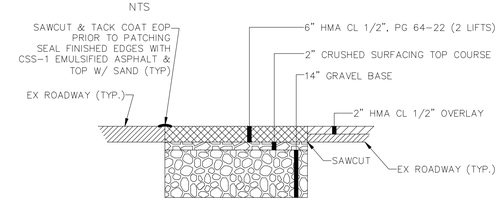

PAVEMENT REMOVAL AND RECONSTRUCTION SECTION

NTS

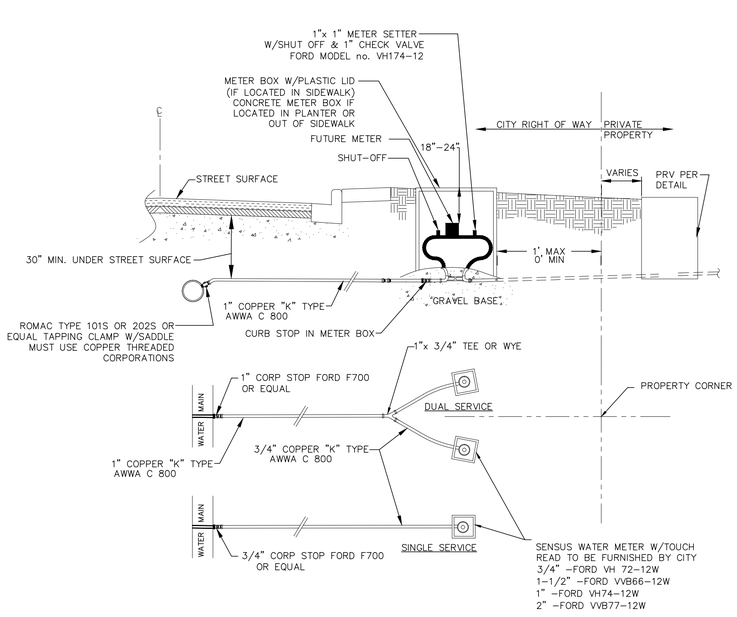

WATER SERVICE CONNECTION DETAIL

NTS

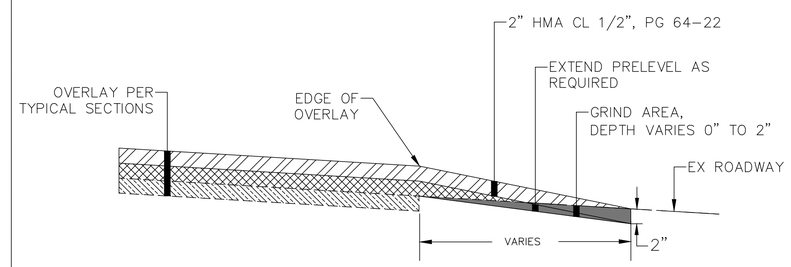

NOVEMBER 30, 2015

APPROVED		ROADWAY GRIND AND MATCH DETAIL
Public Works Director	Date	STANDARD DETAIL R-3
		NOT TO SCALE

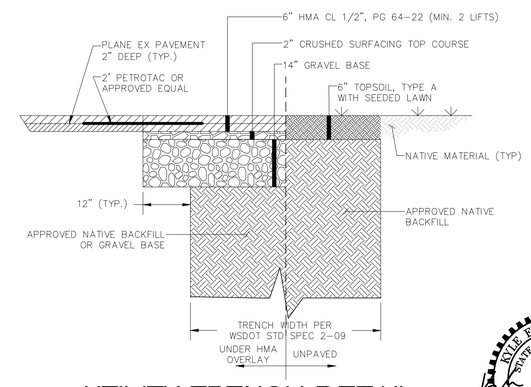

UTILITY TRENCH DETAIL

NTS

KYLE EDWARD CARRIGAN
STATE OF WASHINGTON
50768
REGISTERED PROFESSIONAL ENGINEER
5/10/16

BID SET	DESIGNED BY KEC	DRAWN BY PJC	CHECKED BY LP

R&E Reichhardt & Ebe ENGINEERING INC
P.O. Box 978 | 423 Front Street, Lynden, WA 98264 (360) 354-3687
813 Metcalf Street, Sedro-Woolley, WA 98284 (360) 855-1713

NO.	DATE	DESCRIPTION	BY

CITY OF FERNDALE
2095 MAIN STREET
FERNDALE, WA 98248

WASHINGTON STREET
VISTA DR. TO THIRD AVENUE PROJECT
DETAILS

DWG 15036 PROBASE		DATE 5/10/2016
JOB# 15036	SCALE H: NA V: NA	SHEET 15 of 17

WASHINGTON STREET CL STA 1+50

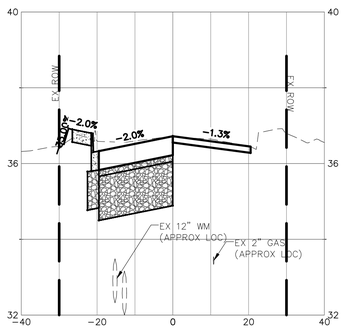

WASHINGTON STREET CL STA 2+50

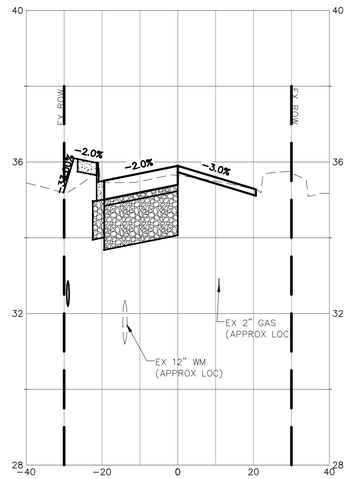

WASHINGTON STREET CL STA 3+50

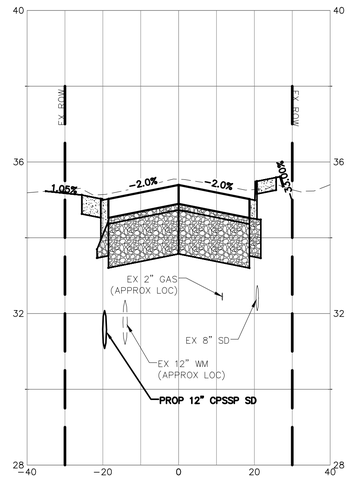

WASHINGTON STREET CL STA 4+50

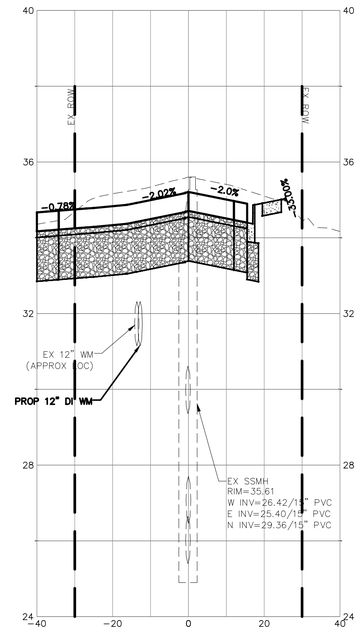

WASHINGTON STREET CL STA 5+50

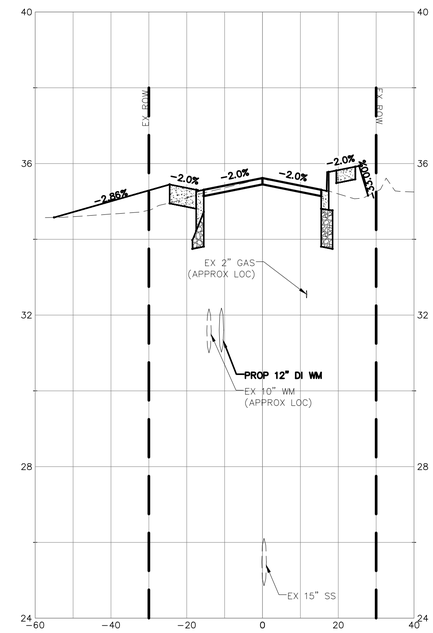

WASHINGTON STREET CL STA 1+00

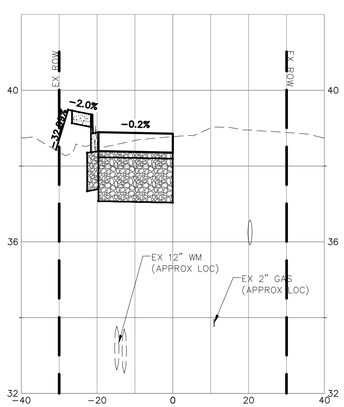

WASHINGTON STREET CL STA 2+00

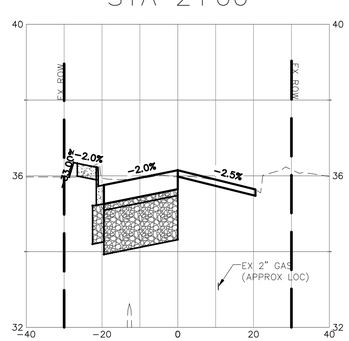

WASHINGTON STREET CL STA 3+00

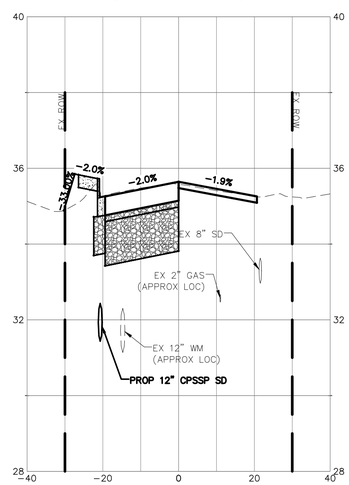

WASHINGTON STREET CL STA 4+00

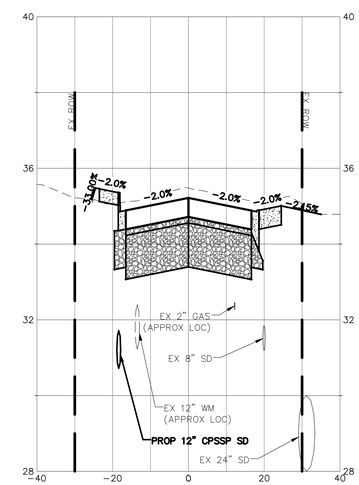

WASHINGTON STREET CL STA 5+00

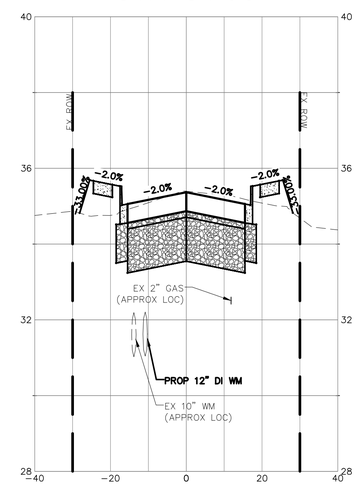

WASHINGTON STREET CL STA 6+00

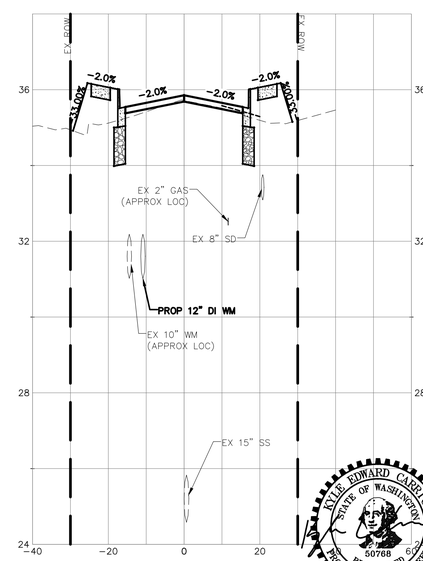

5/10/16

BID SET	DESIGNED BY KEC DRAWN BY PJC CHECKED BY LP	R&E Reichhardt & Ebe ENGINEERING INC P.O. Box 978 | 423 Front Street, Lynden, WA 98264 (360) 354-3687 813 Metcalf Street, Sedro-Woolley, WA 98284 (360) 855-1713	NO. | DATE | DESCRIPTION | BY	CITY OF FERNDALE 2095 MAIN STREET FERNDALE, WA 98248	WASHINGTON STREET VISTA DR. TO THIRD AVENUE PROJECT CROSS SECTIONS STA 1+00 - 6+50	DWG 15036 PROBASE JOB# 15036 SCALE H: 1"=20' V: 1"=2'	DATE 5/10/2016 SHEET 16 of 17

WASHINGTON STREET CL STA 7+00

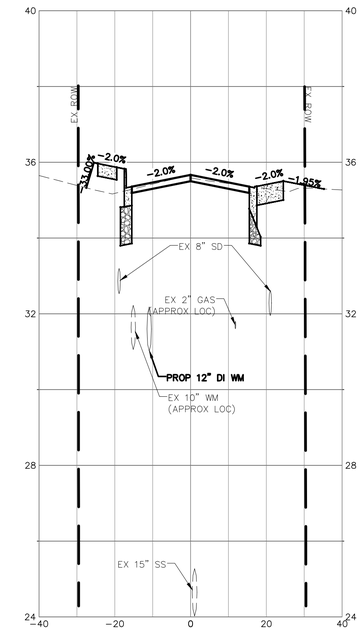

WASHINGTON STREET CL STA 8+00

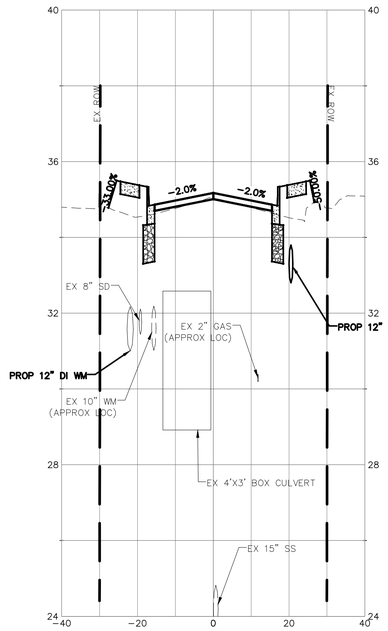

WASHINGTON STREET CL STA 9+00

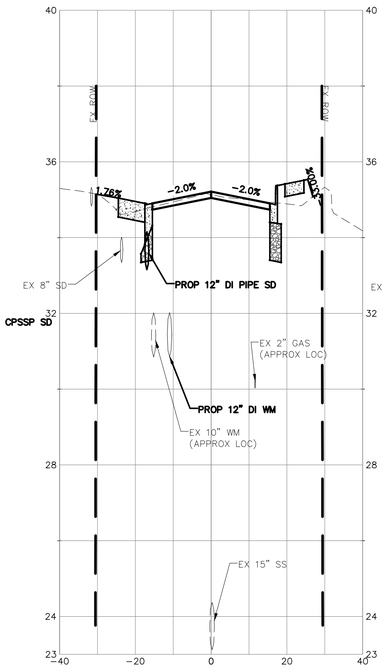

WASHINGTON STREET CL STA 10+00

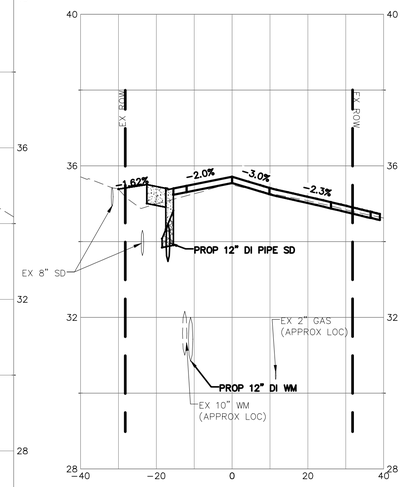

WASHINGTON STREET CL STA 11+00

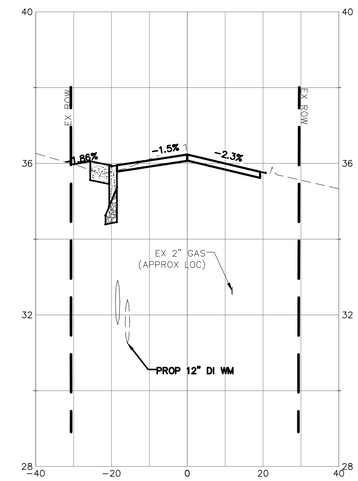

GOLDEN EAGLE CL 50+00 TO 51+00

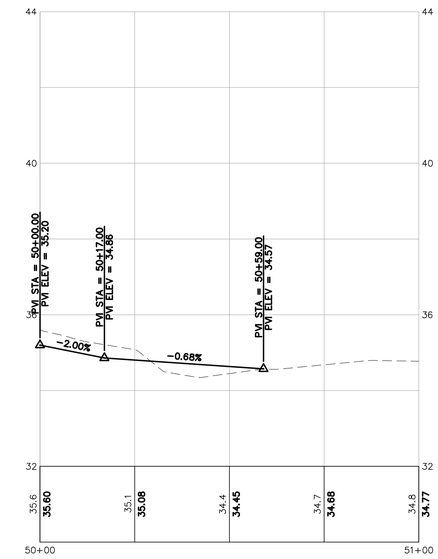

WASHINGTON STREET CL STA 6+50

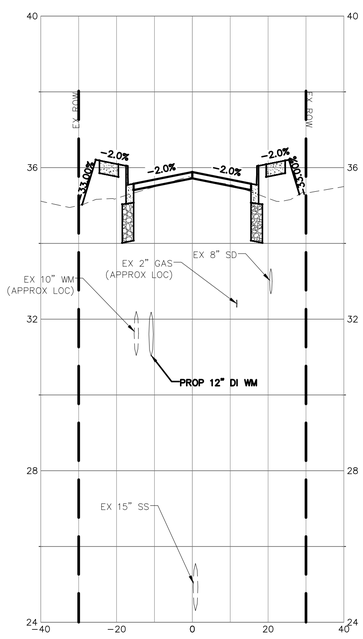

WASHINGTON STREET CL STA 7+50

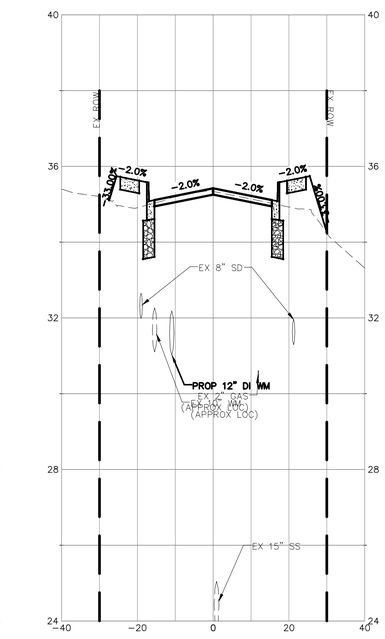

WASHINGTON STREET CL STA 8+50

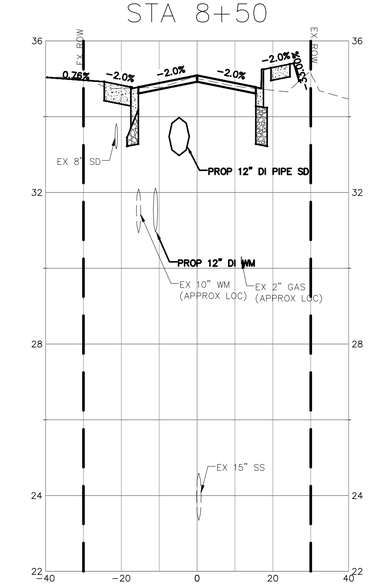

WASHINGTON STREET CL STA 9+50

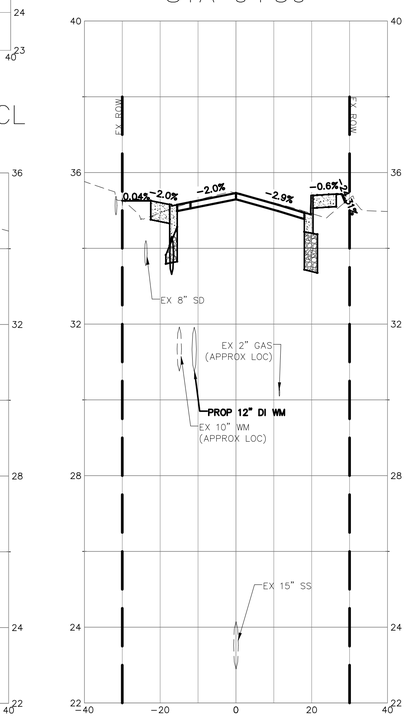

WASHINGTON STREET CL STA 10+50

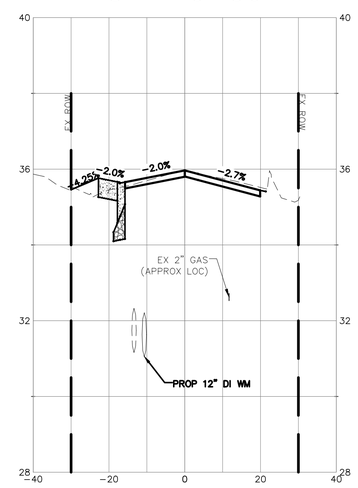

3RD AVE CL 35+25 TO 36+25

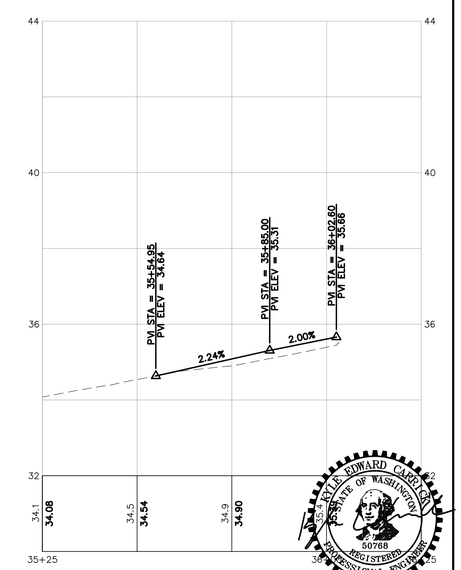

5/10/16

BID SET	DESIGNED BY KEC DRAWN BY PJC CHECKED BY LP	R&E Reichhardt & Ebe ENGINEERING INC P.O. Box 978 | 423 Front Street, Lynden, WA 98264 (360) 354-3687 813 Metcalf Street, Sedro-Woolley, WA 98284 (360) 855-1713	NO. | DATE | DESCRIPTION | BY	CITY OF FERNDALE 2095 MAIN STREET FERNDALE, WA 98248	WASHINGTON STREET VISTA DR. TO THIRD AVENUE PROJECT CROSS SECTIONS STA 7+00 - 11+00	DWG 15036 PROBASE JOB# 15036 SCALE H: 1"=20' V: 1"=2'	DATE 5/10/2016 SHEET 17 of 17

GENERAL NOTES

1. ALL WORK SHALL BE PERFORMED IN ACCORDANCE WITH THE 2016 WSDOT STANDARD SPECIFICATIONS FOR ROAD, BRIDGE AND MUNICIPAL CONSTRUCTION AND ITS AMENDMENTS, SPECIAL PROVISIONS, WSDOT STANDARD PLANS AND NATIONAL ELECTRICAL CODE (ALL CURRENT VERSIONS).
2. THIS PROJECT INVOLVES CONTRACTING AGENCY–SUPPLIED MATERIALS. ALL MATERIALS NOT LISTED AS AGENCY–SUPPLIED SHALL BE FURNISHED BY THE CONTRACTOR. SEE SPECIAL PROVISIONS.
3. ALL RRFB FOUNDATIONS AND SIGN LOCATIONS SHALL BE POTHOLED FOR UNDERGROUND UTILITIES PRIOR TO INSTALLATION.
4. ALL PERMANENT WARNING SIGNS SHALL BE BLACK SYMBOLS/LEGENDS/BORDERS ON FLUORESCENT YELLOW GREEN BACKGROUND.
5. CONTRACTOR SHALL INSTALL TEMPORARY 36"X36" W20–901 "TRAFFIC REVISION AHEAD" SIGNS WITH BLACK LEGENDS AND ORANGE BACKGROUNDS ON 4"X4" TIMBER POSTS AT THE LOCATIONS STAKED BY ENGINEER (TOTAL OF THREE) PRIOR TO RRFB TURN–ON. INSTALL TWO ORANGE FLAGS AT TOP OF EACH POST. REMOVE SIGNS, FLAGS AND POSTS 30 DAYS AFTER TURN–ON.

CONSTRUCTION NOTES

(1) CONSTRUCT FOUNDATION AT LOCATION SHOWN PER FOUNDATION DETAIL ON SHEET TS3. INSTALL RRFB ASSEMBLY PER DETAILS ON SHEET TS2.

(2) INSTALL FOUNDATION, SQUARE STEEL SIGN SUPPORT AND TWO TRAFFIC SIGNS AT LOCATION SHOWN. USE WSDOT STANDARD PLAN G–24.50–03, TYPE ST–2. MOUNT W16–9P SIGN AT 7' ABOVE GRADE. MOUNT S1–1 SIGN DIRECTLY ABOVE W16–9P.

(3) REMOVE EXISTING S1–1 SCHOOL SIGN, POST AND MOUNTING (IF ANY) AND DELIVER TO CITY SHOPS.

(4) REMOVE EXISTING S1–1 SCHOOL SIGN AND DELIVER TO CITY SHOPS. RELOCATE EXISTING "NO PARKING ANY TIME" SIGN TO 7' ABOVE GRADE ON EXISTING POST.

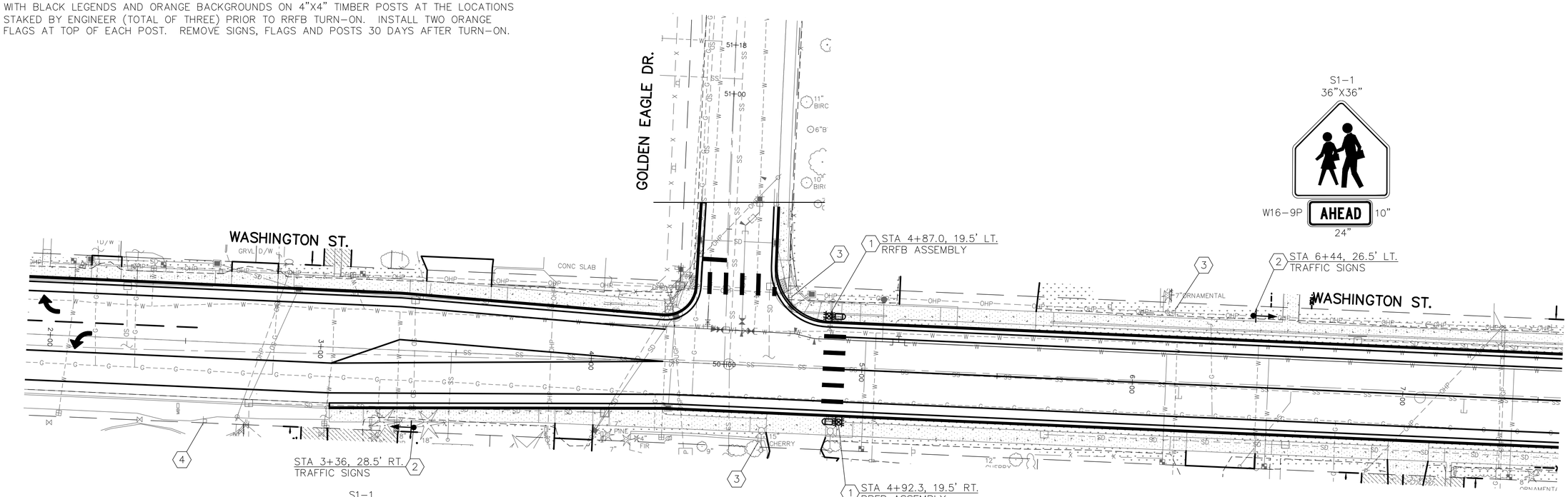

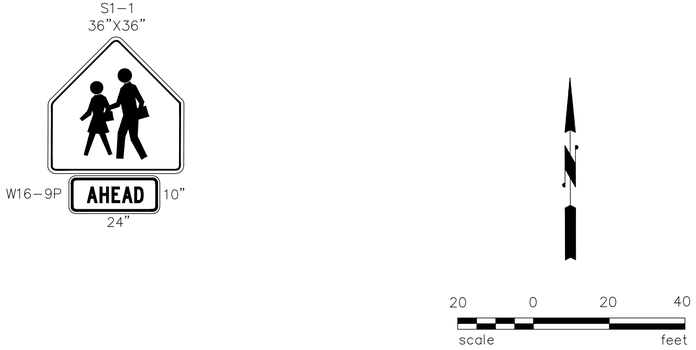

LEGEND

- RECTANGULAR RAPID FLASH BEACON (RRFB) POLE AND FRANGIBLE BASE
- SOLAR–POWERED RRFB
- APS PUSH BUTTON ASSEMBLY
- GROUND–MOUNTED TRAFFIC SIGN(S)
- CONSTRUCTION NOTE

DRAWN	RMH				
DESIGNED	RMH				
CHECKED	5/3/16 RMH				
PROJ. ENGR.					
DRAWING FILE	RRFB.DWG				
		DATE	REVISION	BY	APP'D

FOR:

REICHHARDT & EBE ENGINEERING, INC.
813 Metcalf Street
Sedro–Woolley, WA 98284

ROBERT MARTIN HERMAN
STATE OF WASHINGTON
30730
REGISTERED PROFESSIONAL ENGINEER
5-3-16

HTE HERMAN TRAFFIC ENGINEERING
15324 Southeast 133rd Court, Renton, Washington 98059
425-277-1740 tel. 425-277-5718 fax hte@comcast.net

CITY OF FERNDALE WASHINGTON

WASHINGTON STREET/GOLDEN EAGLE DRIVE

RECTANGULAR RAPID FLASH BEACON PLAN

TS1

SHEET OF SHEETS

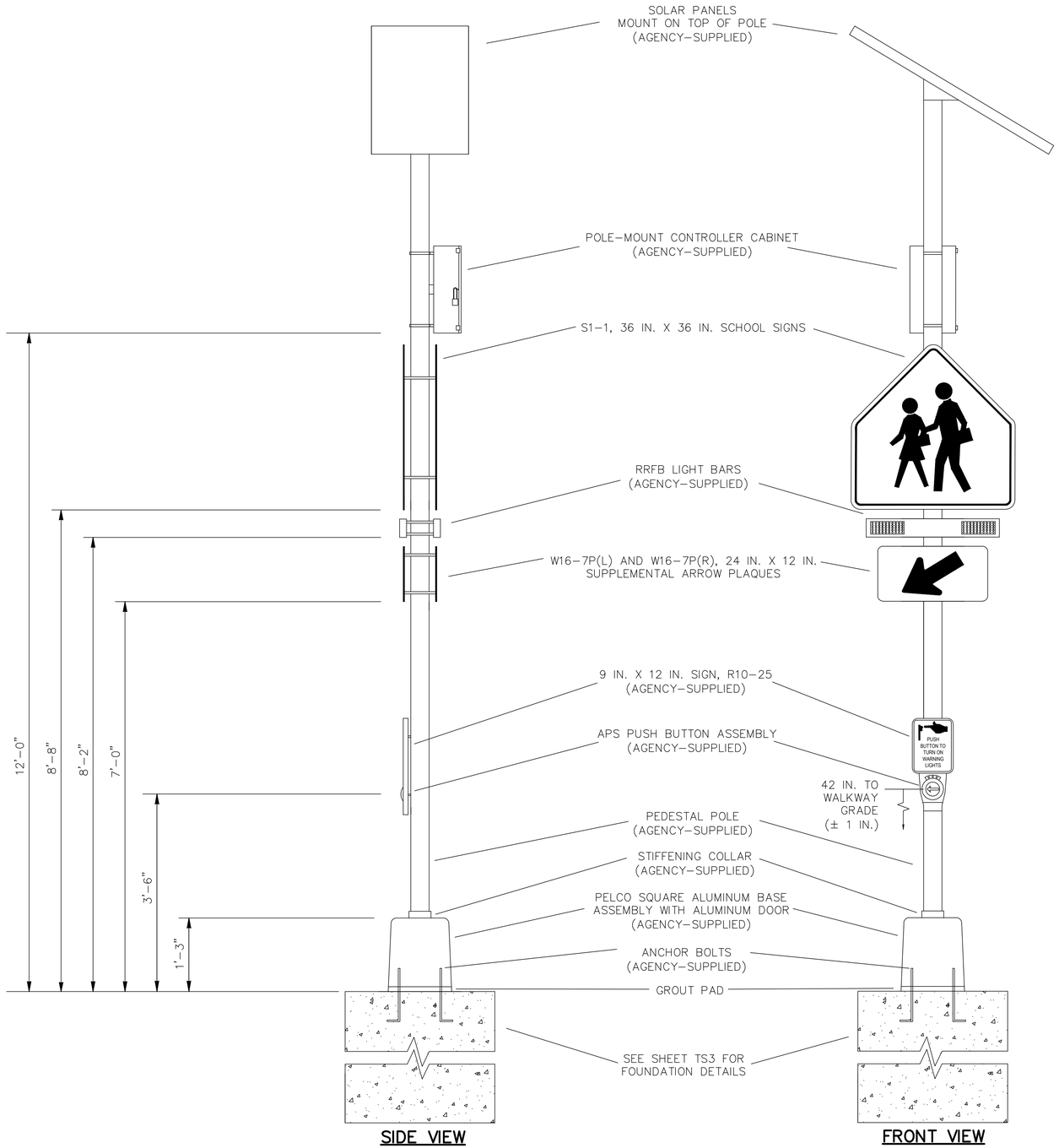

RECTANGULAR RAPID FLASH BEACON ASSEMBLY DETAIL

(NOT TO SCALE)

RRFB NOTES

1. USE STAINLESS STEEL MOUNTING CLAMPS AND BRACKETS TO MOUNT SIGNS, RRFB AND CONTOLLER CABINET TO POLE.
2. ALL APS PUSH BUTTONS (FACE OF PUSH BUTTON) SHALL BE ORIENTED PARALLEL WITH CROSSWALK.
3. CONTRACTOR SHALL CONSTRUCT EACH RRFB ASSEMBLY AS SHOWN INCLUDING INTERNAL WIRING TERMINATIONS PER MANUFACTURER'S RECOMMENDATIONS.

DRAWN	RMH				
DESIGNED	RMH				
CHECKED	5/3/16 RMH				
PROJ. ENGR.					
DRAWING FILE	RRFB.DWG				
		DATE	REVISION	BY	APP'D

FOR:

REICHHARDT & EBE ENGINEERING, INC.
813 Metcalf Street
Sedro–Woolley, WA 98284

ROBERT MARTIN HERMAN
STATE OF WASHINGTON
30730
REGISTERED PROFESSIONAL ENGINEER
5-3-16

HTE HERMAN TRAFFIC ENGINEERING
15324 Southeast 133rd Court, Renton, Washington 98059
425-277-1740 tel. 425-277-5718 fax hte@comcast.net

CITY OF FERNDALE WASHINGTON

WASHINGTON STREET/GOLDEN EAGLE DRIVE

RRFB ASSEMBLY DETAIL

TS2

SHEET OF SHEETS

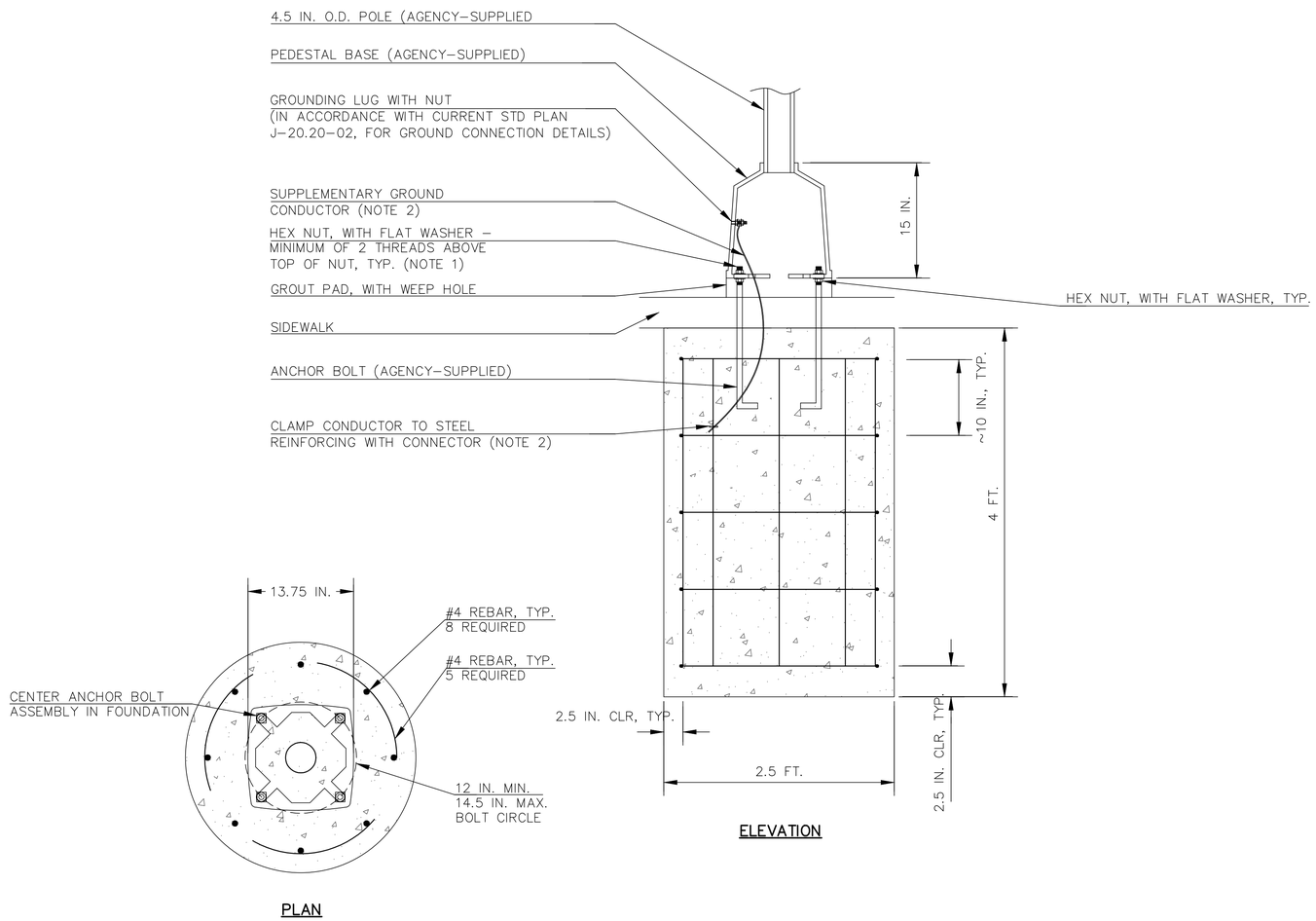

RRFB ASSEMBLY FOUNDATION DETAIL

(NOT TO SCALE)

NOTES

1. CLAMPING BOLTS SHALL BE TIGHTENED TO 50 FT-LBS MAX TORQUE. DO NOT OVERTIGHTEN.
2. SUPPLEMENTAL GROUNDING CONDUCTOR SHALL BE NON-INSULATED #4 AWG STRANDED COPPER, PROVIDE 3 FT. MIN. SLACK. CLAMP TO VERTICAL STEEL REINFORCING BAR WITH LISTED CONNECTOR SUITABLE FOR USE EMBEDDED IN CONCRETE.
3. EQUIPMENT GROUNDING CONDUCTOR SHALL ATTACH FROM GROUND ROD TO GROUNDING LUG WITH A FULL CIRCLE CRIMP-ON CONNECTOR (CRIMPED WITH A MANUFACTURER'S RECOMMENDED CRIMPER).

DRAWN	RMH				
DESIGNED	RMH				
CHECKED	5/3/16 RMH				
PROJ. ENGR.					
DRAWING FILE	RRFB.DWG				
		DATE	REVISION	BY	APP'D

FOR:

REICHHARDT & EBE ENGINEERING, INC.
813 Metcalf Street
Sedro-Woolley, WA 98284

ROBERT MARTIN HERMAN
STATE OF WASHINGTON
30730
REGISTERED
PROFESSIONAL ENGINEER
5-3-16

HTE HERMAN TRAFFIC ENGINEERING

15324 Southeast 133rd Court, Renton, Washington 98059
425-277-1740 tel. 425-277-5718 fax hte@comcast.net

CITY OF FERNDALE WASHINGTON

WASHINGTON STREET/GOLDEN EAGLE DR.

RRFB ASSEMBLY FOUNDATION DETAIL

TS3

SHEET OF SHEETS